INSTALLATION KIT TECHNICAL BULLETIN

FOR

FORCE XXI BATTLE COMMAND BRIGADE-AND-BELOW (FBCB2)

COMPUTER SET, DIGITAL AN/UYK-128(V)

AN/UYK-128(V)1	**(NSN 7010-01-475-5277)**	**(EIC: NA)**
AN/UYK-128(V)2	**(NSN 7010-01-475-5275)**	**(EIC: NA)**

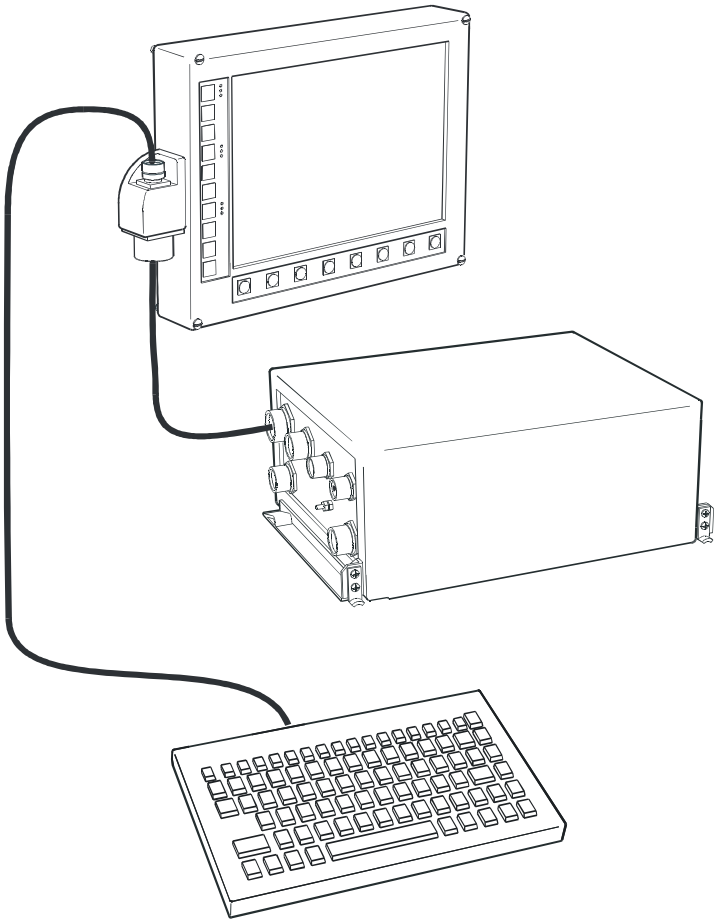

Distribution authorized to the Department of Defense and DOD contractors only for official use or for administrative or operational purposes. This determination was made on 15 March 1995. Other requests for this document must be referred to Commander, US Army Communications-Electronics Command and Fort Monmouth, ATTN: AMSEL-LC-LM-LEO-E-ED-P, Fort Monmouth, NJ 07703-5000.

DESTRUCTION NOTICE — Destroy by any method that will prevent disclosure of contents or reconstruction of the document.

HEADQUARTERS, DEPARTMENT OF THE ARMY

18 MARCH 2002

SAFETY, CARE, AND HANDLING

5 SAFETY STEPS TO FOLLOW IF SOMEONE IS THE VICTIM OF ELECTRICAL SHOCK

1. **DO NOT TRY TO PULL OR GRAB THE INDIVIDUAL WITH BARE HANDS**

2. **IF POSSIBLE, TURN OFF THE ELECTRICAL POWER**

3. **IF YOU CANNOT TURN OFF THE ELECTRICAL POWER, PULL, PUSH, OF LIFT THE PERSON TO SAFETY USING A DRY WOODEN POLE OR A DRY ROPE OR SOME OTHER INSULATING MATERIAL**

4. **SEND FOR HELP AS SOON AS POSSIBLE**

5. **AFTER THE INJURED PERSON IS FREE OF CONTACT WITH THE SOURCE OF THE ELECTRICAL SHOCK, MOVE THE PERSON A SHORT DISTANCE AWAY AND IMMEDIATELY START CARDIOPULMONARY RESUSCITATION (CPR)**

GENERAL SAFETY PRECAUTIONS

For safety precautions during the maintenance of electrical/electronic equipment see TB 385-4 (Army).

For care and handling of electronics equipment see TM 43-0158 (Army).

FIRST AID

For further information on first aid, see FM 21-11.

WARNING

Do not disconnect or connect any cables without first properly powering down the system and turning off all power. Where applicable, always disconnect the ground cable last when disassembling and always connect the ground cable first when assembling. Failure to comply can cause injury to personnel or equipment damage.

WARNING

Before conducting maintenance involving the removal or replacement of system components, ensure that all power to the FBCB2 system is off (including power from the vehicle). Failure to comply with warning may result in equipment damage or injury to personnel.

WARNING

Inspect cables to ensure that they are properly dressed and stowed to prevent trip and snag hazards or damage to equipment.

WARNING

Backlights in the display may break and leak Mercury and Lead. If Mercury and Lead are exposed, avoid contact with skin, eyes, and clothes, and don’t breathe vapors. Immediately contact the proper authorities so that the spillage can be properly removed and if necessary, appropriate medical aid is administered. Dispose of Mercury and Lead IAW your local servicing Defense Reutilization and Marketing Office (DRMO).

WARNING

Vehicle Specific For All Installations With a RAM Ball Mount

A pinch hazard to the fingers or hands may occur between the RAM Ball socket arm and the RAM Ball. Extreme care should be used when adjusting the display.

WARNING

Vehicle Specific For HEMTT, M35 2.5 Ton Truck, M548A3 Volcano, All HMMWV Variants (except M1031 and Avenger)

Display may obstruct view of windshield and right side window. Maximize driver field-of-view prior to vehicle operation.

CAUTION

Do not shutdown the computer power without first following software shutdown procedures. Failure to comply may cause loss of data.

CAUTION

Keyboard should be disconnected and properly stowed when not in use to prevent it from causing equipment damage.

CAUTION

Leaving the Processor Unit circuit breaker/switch set to ON will enable the battery pack to continuously charge as long as there is 18-33 VDC power available. This could possibly result in a dead vehicle battery if left in this condition over an extended period.

CAUTION

Ensure RAM Ball is free of dirt and contaminants before reassembling. Failure to comply can result in slippage or excess wear of RAM Ball assembly.

CAUTION

The system may not properly initialize if power is on before the keyboard cable is connected. Power off before connecting the keyboard cable. When powering up the system, the keyboard must be connected to the display. Do not attempt to connect the keyboard while the system is powered up. Failure to comply can cause equipment damage.

CAUTION

Vehicle Specific For M1068 SICPS BN/BDE/FDCV, M113 (Common), M113 MID FORWARD, and M577 MED

Ensure support is provided to display while loosening RAM ball knob. Failure to comply could result in display falling from RAM Ball mount causing equipment damage.

TECHNICAL BULLETIN
TB 11-7010-326-20

HEADQUARTERS
DEPARTMENT OF THE ARMY
WASHINGTON, DC. 18 MARCH 2002

INSTALLATION KIT TECHNICAL BULLETIN

FORCE XXI BATTLE COMMAND

BRIGADE-AND-BELOW (FBCB2)

COMPUTER SET, DIGITAL AN/UYK-128(V)1 AND (V)2

REPORTING ERRORS AND RECOMMENDING IMPROVEMENTS

You can help improve this manual. If you find any mistakes, or if you know of a way to improve the procedures, please let us know. Mail your letter, DA Form 2028 (Recommended Changes to Publications and Blank Forms), or DA Form 2028-2 located in the back of this manual direct to: Commander, US Army Communications-Electronics Command and Fort Monmouth, ATTN: AMSEL-LC-LEO-D-CS-CFO, Fort Monmouth, New Jersey 07703-5000. The fax number is 732-532-1413, DSN 992-1413. You may also e-mail your recommendations to AMSEL-LC-LEO-PUBS-CHG@cecom3.monmouth.army.mil.
In either case a reply will be furnished direct to you.

TABLE OF CONTENTS

Page
TABLE OF CONTENTS i
HOW TO USE THIS MANUAL ix
GENERAL INFORMATION 1–1

M109A6 PALADIN

Page
APPENDIX A A–1
A–1. GENERAL A–3
A–2. COMPONENT ITEM NUMBERS AND PART NUMBERS A–3
A–3. SYSTEM INTERFACES A–3
A–4. COMPONENT LOCATION A–6
A–5. PLATFORM-UNIQUE TROUBLESHOOTING A–9
A–6. REMOVAL/REPLACEMENT IN THE PLATFORM A–9

M1064 MORTAR CARRIER

Page
APPENDIX B B–1
B–1. GENERAL B–3
B–2. COMPONENT ITEM NUMBERS AND PART NUMBERS B–3
B–3 SYSTEM INTERFACES B–3
B–4. COMPONENT LOCATION B–6
B–5. PLATFORM-UNIQUE TROUBLESHOOTING B–10
B–6. REMOVAL/REPLACEMENT IN THE PLATFORM B–10

M981A2 FIST-V

Page
APPENDIX C C–1
C–1. GENERAL C–3
C–2. COMPONENT ITEM NUMBERS AND PART NUMBERS C–3
C–3. SYSTEM INTERFACES C–4
C–4. COMPONENT LOCATION C–6
C–5. PLATFORM-UNIQUE TROUBLESHOOTING C–9
C–6. REMOVAL/REPLACEMENT IN THE PLATFORM C–9

M9 ACE (DOZER)

Page
APPENDIX D D–1
D–1. GENERAL D–3
D–2. COMPONENT ITEM NUMBERS AND PART NUMBERS D–3
D–3. SYSTEM INTERFACES D–3
D–4. COMPONENT LOCATION D–6
D–5. PLATFORM-UNIQUE TROUBLESHOOTING D–9
D–6. REMOVAL/REPLACEMENT IN THE PLATFORM D–9

M60 AVLB/M

Page
APPENDIX E E–1
E–1. GENERAL E–3
E–2. COMPONENT ITEM NUMBERS AND PART NUMBERS E–3
E–3. SYSTEM INTERFACES E–3
E–4. COMPONENT LOCATION E–6
E–5. PLATFORM-UNIQUE TROUBLESHOOTING E–10
E–6. REMOVAL/REPLACEMENT IN THE PLATFORM E–10

M548A3 VOLCANO

Page
APPENDIX F F–1
F–1. GENERAL F–3
F–2. COMPONENT ITEM NUMBERS AND PART NUMBERS F–3
F–3. SYSTEM INTERFACES F–3
F–4. COMPONENT LOCATION F–6
F–5. PLATFORM-UNIQUE TROUBLESHOOTING F–9
F–6. REMOVAL/REPLACEMENT IN THE PLATFORM F–9

M577 MORTAR (FDC)

Page
APPENDIX G G–1
G–1. GENERAL G–3
G–2. COMPONENT ITEM NUMBERS AND PART NUMBERS G–3
G–3. SYSTEM INTERFACES G–4
G–4. COMPONENT LOCATION G–6
G–5. PLATFORM-UNIQUE TROUBLESHOOTING G–9
G–6. REMOVAL/REPLACEMENT IN THE PLATFORM G–9

M577 MEDICAL

Page
APPENDIX H H–1
H–1. GENERAL H–3
H–2. COMPONENT ITEM NUMBERS AND PART NUMBERS H–3
H–3. SYSTEM INTERFACES H–4
H–4. COMPONENT LOCATION H–6
H–5. PLATFORM-UNIQUE TROUBLESHOOTING H–8
H–6. REMOVAL/REPLACEMENT IN THE PLATFORM H–8

M113 COMMON

Page
APPENDIX I I–1
I–1. GENERAL I–3
I–2. COMPONENT ITEM NUMBERS AND PART NUMBERS I–3
I–3. SYSTEM INTERFACES I–3
I–4. COMPONENT LOCATION I–5
I–5. PLATFORM-UNIQUE TROUBLESHOOTING I–8
I–6. REMOVAL/REPLACEMENT IN THE PLATFORM I–8

M88A1 HERCULES

Page
APPENDIX J J–1
J–1. GENERAL J–3
J–2. COMPONENT ITEM NUMBERS AND PART NUMBERS J–3
J–3. SYSTEM INTERFACES J–3
J–4. COMPONENT LOCATION J–6
J–5. PLATFORM-UNIQUE TROUBLESHOOTING J–7
J–6. REMOVAL/REPLACEMENT IN THE PLATFORM J–8

M998/M1026/M1038 HMMWV

Page
APPENDIX K K–1
K–1. GENERAL K–3
K–2. COMPONENT ITEM NUMBERS AND PART NUMBERS K–3
K–3. SYSTEM INTERFACES K–3
K–4. COMPONENT LOCATION K–6
K–5. PLATFORM-UNIQUE TROUBLESHOOTING K–8
K–6. REMOVAL/REPLACEMENT IN THE PLATFORM K–8

M997 HMMWV AMBULANCE

Page
APPENDIX L L–1
L–1. GENERAL L–3
L–2. COMPONENT ITEM NUMBERS AND PART NUMBERS L–3
L–3. SYSTEM INTERFACES L–3
L–4. COMPONENT LOCATION L–6
L–5. PLATFORM-UNIQUE TROUBLESHOOTING L–8
L–6. REMOVAL/REPLACEMENT IN THE PLATFORM L–8

M93A1 FOX

Page
APPENDIX M M–1
M–1. GENERAL M–3
M–2. COMPONENT ITEM NUMBERS AND PART NUMBERS M–3
M–3. SYSTEM INTERFACES M–3
M–4. COMPONENT LOCATION M–6
M–5. PLATFORM-UNIQUE TROUBLESHOOTING M–10
M–6. REMOVAL/REPLACEMENT IN THE PLATFORM M–10

M1097 AVENGER

Page
APPENDIX N N–1
N–1. GENERAL N–3
N–2. COMPONENT ITEM NUMBERS AND PART NUMBERS N–3
N–3. AVENGER (GFE) ACRONYMS/ABBREVIATIONS N–3
N–4. SYSTEM INTERFACES N–4
N–5. COMPONENT LOCATION N–6
N–6. PLATFORM-UNIQUE TROUBLESHOOTING N–10
N–7. REMOVAL/REPLACEMENT IN THE PLATFORM N–10

M1031 CUCV

Page
APPENDIX P P–1
P–1. GENERAL P–3
P–2. COMPONENT ITEM NUMBERS AND PART NUMBERS P–3
P–3. SYSTEM INTERFACES P–4
P–4. COMPONENT LOCATION P–6
P–5. PLATFORM-UNIQUE TROUBLESHOOTING P–8
P–6. REMOVAL/REPLACEMENT IN THE PLATFORM P–8

M985/978/1074/1075/1120 HEMMT/PLS/LHS

Page
APPENDIX R R–1
R–1. GENERAL R–3
R–2. COMPONENT ITEM NUMBER AND PART NUMBERS R–3
R–3. SYSTEM INTERFACES R–3
R–4. COMPONENT LOCATION R–6
R–5. PLATFORM-UNIQUE TROUBLESHOOTING R–9
R–6. REMOVAL/REPLACEMENT IN THE PLATFORM R–9

M923 5-TON/M936A2 WRECKER

Page
APPENDIX S S–1
S–1. GENERAL S–3
S–2. COMPONENT ITEM NUMBERS AND PART NUMBERS S–3
S–3. SYSTEM INTERFACES S–3
S–4. COMPONENT LOCATION S–6
S–5. PLATFORM-UNIQUE TROUBLESHOOTING S–8
S–6. REMOVAL/REPLACEMENT IN THE PLATFORM S–8

M1097/M1037 RIGID WALL SHELTER (RWS)

Page
APPENDIX T T–1
T–1. GENERAL T–3
T–2. COMPONENT ITEM NUMBERS AND PART NUMBERS T–3
T–3. SYSTEM INTERFACES T–4
T–4. COMPONENT LOCATION T–6
T–5. PLATFORM-UNIQUE TROUBLESHOOTING T–9
T–6. REMOVAL/REPLACEMENT IN THE PLATFORM T–9

M992 FASSV

Page
APPENDIX U U–1
U–1. GENERAL U–3
U–2. COMPONENT ITEM NUMBERS AND PART NUMBERS U–3
U–3. SYSTEM INTERFACES U–3
U–4. COMPONENT LOCATION U–6
U–5. PLATFORM-UNIQUE TROUBLESHOOTING U–9
U–6. REMOVAL/REPLACEMENT IN THE PLATFORM U–9

M1068 BRIGADE

Page
APPENDIX V V–1
V–1. GENERAL V–3
V–2. COMPONENT ITEM NUMBERS AND PART NUMBERS V–3
V–3. SYSTEM INTERFACES V–4
V–4. COMPONENT LOCATION V–6
V–5. PLATFORM-UNIQUE TROUBLESHOOTING V–9
V–6. REMOVAL/REPLACEMENT IN THE PLATFORM V–9

M1068 (SICPS) BATTALION

Page
APPENDIX W W–1
W–1. GENERAL W–3
W–2. COMPONENT ITEM NUMBERS AND PART NUMBERS W–3
W–3. SYSTEM INTERFACES W–4
W–4. COMPONENT LOCATION W–6
W–5. PLATFORM-UNIQUE TROUBLESHOOTING W–9
W–6. REMOVAL/REPLACEMENT IN THE PLATFORM W–9

M1068 FDCV

Page
APPENDIX X X–1
X–1. GENERAL X–3
X–2. COMPONENT PART NUMBERS X–3
X–3. SYSTEM INTERFACES X–4
X–4. COMPONENT LOCATION X–6
X–5. PLATFORM-UNIQUE TROUBLESHOOTING X–8
X–6. REMOVAL/REPLACEMENT IN THE PLATFORM X–8

M934 EXPANDO VAN

Page
APPENDIX Y Y–1
Y–1. GENERAL Y–3
Y–2. COMPONENT ITEM NUMBERS AND PART NUMBERS Y–3
Y–3. SYSTEM INTERFACES Y–3
Y–4. COMPONENT LOCATION Y–6
Y–5. PLATFORM-UNIQUE TROUBLESHOOTING Y–7
Y–6. REMOVAL/REPLACEMENT IN THE PLATFORM Y–7

M35A3 2½ TON CARGO CARRIER

Page
APPENDIX Z Z–1
Z–1. GENERAL Z–3
Z–2. COMPONENT ITEM NUMBERS AND PART NUMBERS Z–3
Z–3. SYSTEM INTERFACES Z–3
Z–4. COMPONENT LOCATION Z–6
Z–5. PLATFORM-UNIQUE TROUBLESHOOTING Z–9
Z–6. REMOVAL/REPLACEMENT IN THE PLATFORM Z–9

M1070 HEAVY EQUIPMENT TRANSPORT (HET)

Page
APPENDIX AA AA–1
AA–1. GENERAL AA–3
AA–2. COMPONENT ITEM NUMBERS AND PART NUMBERS AA–3
AA–3. SYSTEM INTERFACES AA–3
AA–4. COMPONENT LOCATION AA–6
AA–5. PLATFORM-UNIQUE TROUBLESHOOTING AA–8
AA–6. REMOVAL/REPLACEMENT IN THE PLATFORM AA–8

SICPS TENT

Page
APPENDIX AB AB–1
AB–1. GENERAL AB–3
AB–2. COMPONENT ITEM NUMBERS AND PART NUMBERS AB–3
AB–3. SYSTEM INTERFACES AB–3
AB–4. COMPONENT LOCATION AB–6
AB–5. PLATFORM-UNIQUE TROUBLESHOOTING AB–12
AB–6. REMOVAL/REPLACEMENT IN THE PLATFORM AB–15

FMTV, 2 1/2 TON TRUCK

Page
APPENDIX AC AC–1
AC–1. GENERAL AC–3
AC–2. COMPONENT ITEM NUMBERS AND PART NUMBERS AC–3
AC–3. SYSTEM INTERFACES AC–3
AC–4. COMPONENT LOCATION AC–6
AC–5. PLATFORM-UNIQUE TROUBLESHOOTING AC–8
AC–6. REMOVAL/REPLACEMENT IN THE PLATFORM AC–8

DEUCE

Page
APPENDIX AD AD–1
AD–1. GENERAL AD–3
AD–2. COMPONENT ITEM NUMBERS AND PART NUMBERS AD–3
AD–3. SYSTEM INTERFACES AD–3
AD–4. COMPONENT LOCATION AD–6
AD–5. PLATFORM-UNIQUE TROUBLESHOOTING AD–8
AD–6. REMOVAL/REPLACEMENT IN THE PLATFORM AD–8

M1114 UP-ARMORED HMMWV

Page
APPENDIX AE AE–1
AE–1. GENERAL AE–3
AE–2. COMPONENT ITEM NUMBERS AND PART NUMBERS AE–3
AE–3. SYSTEM INTERFACES AE–3
AE–4. COMPONENT LOCATION AE–6
AE–5. PLATFORM-UNIQUE TROUBLESHOOTING AE–8
AE–6. REMOVAL/REPLACEMENT IN THE PLATFORM AE–8

M113 TACTICAL AIR COMMAND POST (TAC-P)

Page
APPENDIX AF AF–1
AF–1. GENERAL AF–3
AF–2. COMPONENT ITEM NUMBERS AND PART NUMBERS AF–3
AF–3. SYSTEM INTERFACES AF–3
AF–4. COMPONENT LOCATION AF–6
AF–5. PLATFORM-UNIQUE TROUBLESHOOTING AF–9
AF–6. REMOVAL/REPLACEMENT IN THE PLATFORM AF–9

Q36 HMMWV

Page
APPENDIX AG AG–1
AG–1. GENERAL AG–3
AG–2. COMPONENT ITEM NUMBERS AND PART NUMBERS AG–3
AG–3. SYSTEM INTERFACES AG–3
AG–4. COMPONENT LOCATION AG–6
AG–5. PLATFORM-UNIQUE TROUBLESHOOTING AG–8
AG–6. REMOVAL/REPLACEMENT IN THE PLATFORM AG–8

M1113 ECV HMMWV

Page
APPENDIX AH AH–1
AH–1. GENERAL AH–3
AH–2. COMPONENT ITEM NUMBERS AND PART NUMBERS AH–3
AH–3. SYSTEM INTERFACES AH–3
AH–4. COMPONENT LOCATION AH–6
AH–5. PLATFORM-UNIQUE TROUBLESHOOTING AH–8
AH–6. REMOVAL/REPLACEMENT IN THE PLATFORM AH–8

HOW TO USE THIS MANUAL

This Unit Level Technical Bulletin contains the information required to remove and replace each Installation Kit (I-Kit) subassembly. The FBCB2 equipment consists of the following parts:

AN/UYK-128(V) computer with the following Government Furnished Equipment (GFE):

Single Channel Ground and Airborne Radio System Advanced System Improvement Program (SINCGARS ASIP) and/or the Enhanced Position Location Reporting System (EPLRS)

Precision Lightweight GPS Receiver (PLGR)

Router (also known as the Internet Controller (INC))

Throughout this technical bulletin, the nomenclature Digital Computer Set AN/UYK-128(V)1 and (V)2 and AN/UYK-128(V) computer are used interchangeably and refer to the same equipment.

TM 11-7010-326-20&P provides the information to check the operational availability of the AN/UYK-128(V) computer and interface equipment.

TM 11-7010-326-20&P is used to perform installation and removal of the major FBCB2 computer components.

TM 11-7010-326-20&P also provides information to test and troubleshoot system failures. Once the failure has been isolated, removal/replacement instructions are provided for FBCB2 computer equipment.

Appendices A through AH of this Technical Bulletin provide removal and replacement instructions for platform-specific hardware. This includes vehicle-specific assembly part numbers, location, mounting, removal, and replacement instructions.

GENERAL INFORMATION

1–1 SCOPE

1–1.1 TYPE OF MANUAL: UNIT MAINTENANCE

This manual contains instructions for the removal and replacement of AN/UYK-128(V) computer system installation hardware (e.g., brackets, mounts, cabling, etc.) used within the various platforms described in this technical bulletin.

1–1.2 I-KITS

The Installation Kits (I-Kits) are unique hardware necessary to install (mount) the AN/UYK-128(V) computer system (refer to TM 11-7010-326-20&P) into various platforms. The I-Kits consist of installation hardware and interconnecting cables. The following is a representative listing of the installation kit hardware. (Refer to the applicable appendices for hardware specific to a particular platform.)

Installation Hardware	Cabling
Mount, Display Unit	Cable Assembly, Power W1
RAM-Ball	Cable Assembly, Display W2
Shock Isolation	Adapter Assembly, Interface W3 (SIAD)
Mount, Processor Unit	Cable Assembly, INC W3N
Shock Isolation	Cable Assembly, PLGR W3P
Box, Keyboard Stowage	Cable Assembly, Audio W4
	Cable Assembly, Expansion Port W5

1–2 CONSOLIDATED INDEX OF ARMY PUBLICATIONS AND BLANK FORMS

Refer to the latest issue of DA Pam 25-30 to determine whether there are new editions, changes, or additional publications pertaining to the equipment.

1–3 MAINTENANCE FORMS, RECORDS, AND REPORTS

1–3.1 REPORTS OF MAINTENANCE AND UNSATISFACTORY EQUIPMENT

Department of the Army forms and procedures used for equipment maintenance will be those prescribed by DA Pam 738-750, as contained in Maintenance Management Update.

1–3.2 REPORTING OF ITEM AND PACKAGING DISCREPANCIES

Fill out and forward SF 364 Report of Discrepancy (ROD) as prescribed in AR 735-11-2.

1–3.3 TRANSPORTATION DISCREPANCY REPORT

Fill out and forward Transportation Discrepancy Report (TDR) SF 361 as prescribed in AR 55-38.

1–4 DESTRUCTION OF ARMY MATERIEL

The destruction of Army electronics materiel to prevent enemy use shall be in accordance with TM 750-244-2.

1–5 ADMINISTRATIVE STORAGE

Administrative storage of equipment issued to and used by Army activities will have Preventive Maintenance Checks and Services (PMCS) (located in the Operators Manual, TM 11-7010-326-10) performed before storing. When removing the equipment from administrative storage, the PMCS checks should be performed to assure operational readiness.

1–6 REPORTING EQUIPMENT IMPROVEMENT RECOMMENDATION (EIR)

If your FBCB2 equipment or software needs improvement, let us know. Send us an EIR. You, the user, are the only one who can tell us what you don't like about your equipment. Let us know why you don't like the design or performance. Put it on an SF 368 (Product Quality Deficiency Report). Mail it to: Commander, US Army Communications-Electronics Command and Fort Monmouth, ATTN: AMSEL-LC-LEO-D-CS-CFO, Fort Monmouth, New Jersey 07703-5000. We'll send you a reply.

1–7 WARRANTY

The AN/UYK-128(V) computer system warranty starts on the date found in block 23, DA Form 2408-9 in the logbook. Report all defects to your supervisor, who will take appropriate action. Also refer to TB 11-7010-326-30 Warranty Program for Computer Set, Digital AN/UYK-128(V)1 NSN 7010-01-475-5277 and AN/UYK12-128(V)2 NSN 7010-01-475-5275 for additional warranty information.

APPENDIX A

SUPPLEMENTARY INFORMATION FOR

M109A6 PALADIN

TABLE OF CONTENTS

Page

A–1 GENERAL A–3

A–2 COMPONENT ITEM NUMBERS AND PART NUMBERS A–3

A–3 SYSTEM INTERFACES A–3

A–3.1 MECHANICAL A–3

A–3.2 CABLE INTERFACES A–4

A–4 COMPONENT LOCATION A–6

A–4.1 GENERAL LOCATION A–6

A–4.2 MOUNTING A–7

A–5 PLATFORM-UNIQUE TROUBLESHOOTING A–9

A–6 REMOVAL/REPLACEMENT IN THE PLATFORM A–9

A–6.1 FUNCTIONAL CHECK A–9

A–6.2 REMOVE/REPLACE W1 POWER CABLE A–10

A–6.3 REMOVE/REPLACE W2 DISPLAY CABLE A–11

A–6.4 REMOVE/REPLACE W3 SERIAL INTERFACE ADAPTER DEVICE (SIAD) A–12

A–6.5 REMOVE/REPLACE W3E EDS KEYPAD CABLE A–13

A–6.6 REMOVE/REPLACE W3N INC CABLE A–14

A–6.7 REMOVE/REPLACE W4 AUDIO CABLE A–15

A–6.8 REMOVE/REPLACE W1A EPLRS POWER CABLE A–16

A–6.9 REMOVE/REPLACE PU ISOLATION ASSEMBLY A–18

A–6.10 REMOVE/REPLACE 10.4” DU ISOLATION ASSEMBLY A–21

A–6.11 REMOVE/REPLACE EPLRS ISOLATION ASSEMBLY A–24

A–6.12 REMOVE/REPLACE EPLRS WEB STRAP A–25

A–6.13 REMOVE/REPLACE KEYBOARD UNIT (KU) STOWAGE BOX A–28

A–6.14 REMOVE/REPLACE KEYBOARD UNIT (KU) STOWAGE BOX MOUNTING PLATE A–29

A–6.15 REMOVE/REPLACE KEYBOARD UNIT (KU) STOWAGE BOX DOOR LATCHES A–32

LIST OF ILLUSTRATIONS

Page
Figure A-1. Equipment Interface Block Diagram A–5
Figure A-2. Relative Component Locations A–6
Figure A-3. KU Stowage Box Mounting A–7
Figure A-4. DU And EDS Keypad Mounting A–8
Figure A-5. Cable Run A–17
Figure A-6. Remove and Replace PU Isolation Assembly A–20
Figure A-7. Remove and Replace DU Isolation Assembly A–23
Figure A-8. Remove and Replace EPLRS Isolation Assembly and Web Strap A–26
Figure A-9. Remove and Replace Keyboard Unit (KU) Stowage Box and Mounting Plate ... A–30
Figure A-10. Remove and Replace Keyboard Unit (KU) Stowage Box Door Latches A–33

A–1 GENERAL

This appendix describes the interfaces between the FBCB2 equipment and the M109A6 Paladin. This appendix also identifies the component parts of the M109A6 Paladin platform installation kit and details the removal and replacement procedures particular to the M109A6 Paladin.

A–2 COMPONENT ITEM NUMBERS AND PART NUMBERS

Key and Parts List tables contained in the Removal and Replacement section of this Appendix serve a dual purpose. Use the Item Numbers in the Key to identify components and attaching hardware shown in the Figures illustrating the tasks. The nomenclature and part number for the hardware and equipment mounting components of the installation kit also are keyed to the Item Numbers in the tables. Additional parts ordering information, such as Contractor and Government Entity code (CAGE); National Stock Number (NSN); quantity; and Source, Maintenance and Recoverability (SMR) codes, are provided. The Key and Parts List follow the task illustrations.

A–3 SYSTEM INTERFACES

A–3.1 MECHANICAL

The mechanical hardware-to-hardware interfaces include:

a. Cables

b. Processor Unit (PU)

c. Display Unit (DU)

d. Keyboard Unit (KU)

A–3.2 CABLE INTERFACES

Figure A-1 illustrates a block diagram of the interface between the FBCB2 equipment and the M109A6 Paladin (Platform). Figure A-1 also illustrates the signal and control interfaces along with the terminal connector labels (e.g., P1, P2). Cable pin-out diagrams and AN/UYK-128(V) computer hardware troubleshooting may be found in Unit Maintenance Manual TM 11-7010-326-20&P. The purpose of each cable is listed below:

Cable Name	Purpose
W1–Cable	Supplies vehicle power to the AN/UYK-128(V) computer and its subassemblies. It also provides power to the DRUH.
W1A–Cable	Provides power to Enhanced Position Location Reporting System (EPLRS) radio.
W2–Cable	Supplies power and signals to the Display Unit (DU) and Keyboard Unit (KU). Returns Man Machine Interface (MMI) information from the KU to the Processor Unit (PU).
W3–Cable	The Serial Interface Adapter Device (SIAD) is a conduit assembly that breaks out each of the serial interface ports to a connector.
W3E–Cable	Connects serial data between the W3 SIAD and the vehicle Enhanced Display System (EDS) keypad.
W3N–Cable	Provides duplex communication between the Internet Controller (INC) and PU.
W4–Cable	Connects audio signals from the PU to the Master Control Station and Automatic Fire Control System (AFCS).
Ground Strap	Provides safety ground for the PU.
Ground Strap	Provides safety ground for the DU.

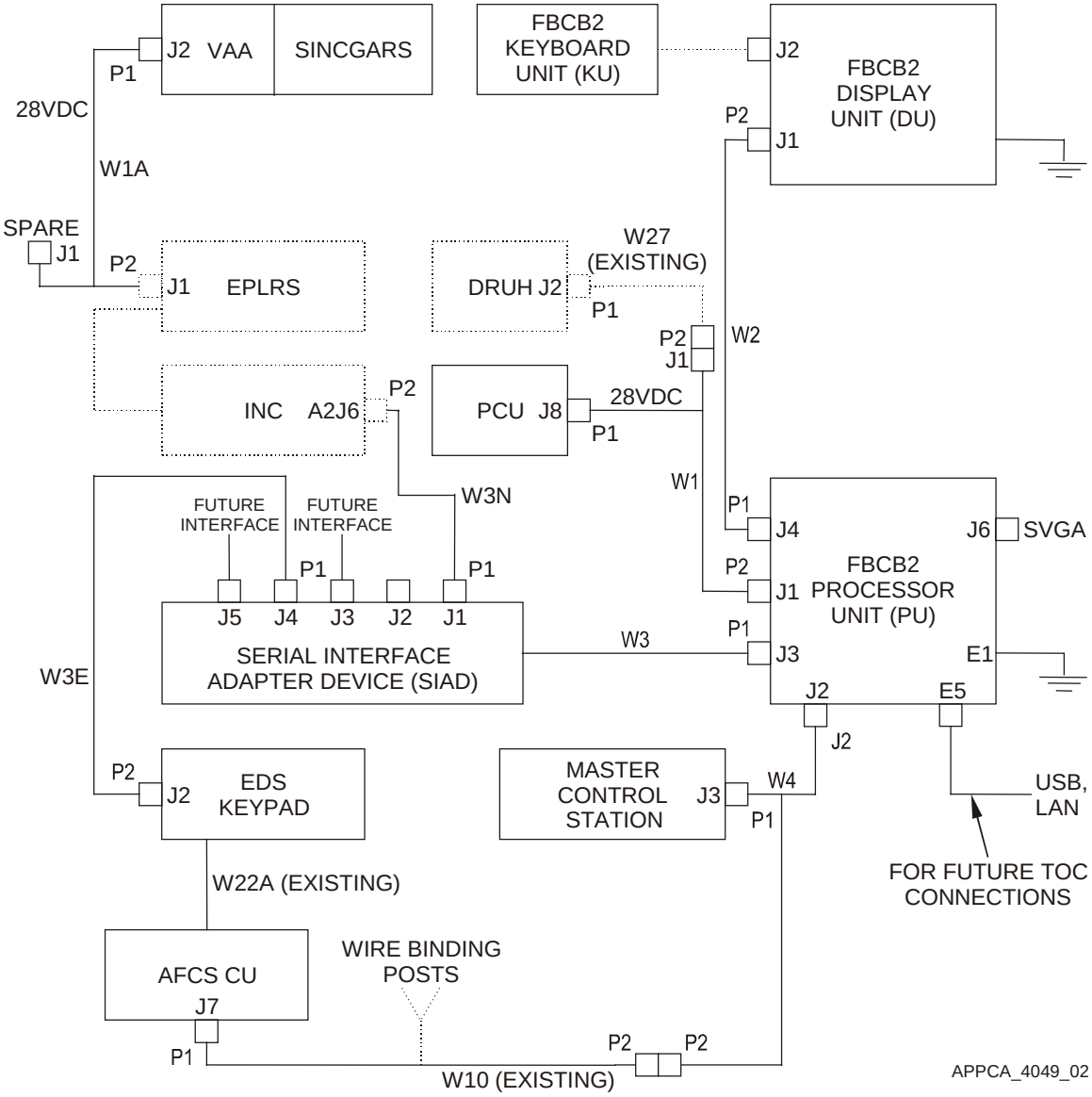

Figure A-1. Equipment Interface Block Diagram

A–4 COMPONENT LOCATION

A–4.1 GENERAL LOCATION

Figure A-2 shows the relative location of the FBCB2 computer equipment and mounting components in the M109A6 Paladin turret.

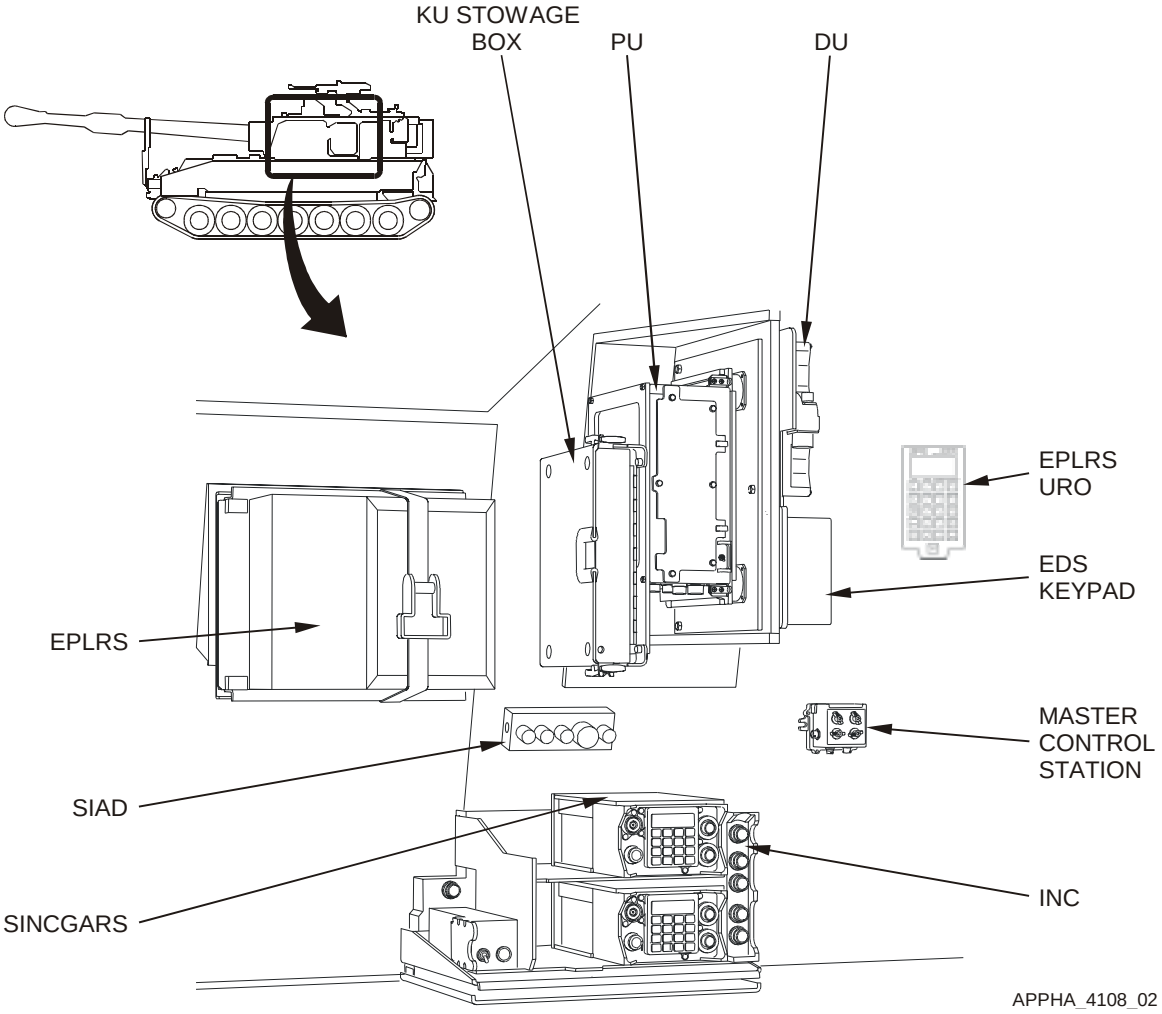

Figure A-2. Relative Component Locations

A–4.2 MOUNTING

A–4.2.1 KU STOWAGE BOX MOUNTING

Figure A-3 illustrates the KU stowage box mounting on the Processor Unit (PU).

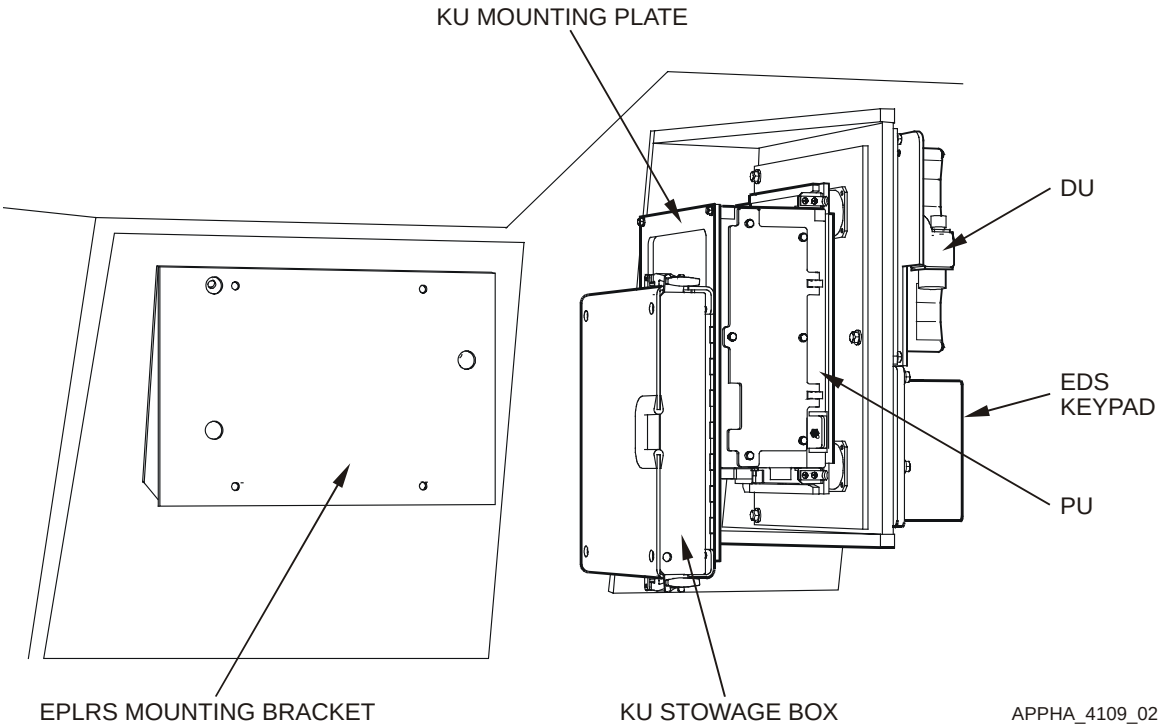

Figure A-3. KU Stowage Box Mounting

A–4.2.2 DU AND EDS KEYPAD MOUNTING

Figure A-4 illustrates the Display Unit (DU) and EDS Keypad mounting.

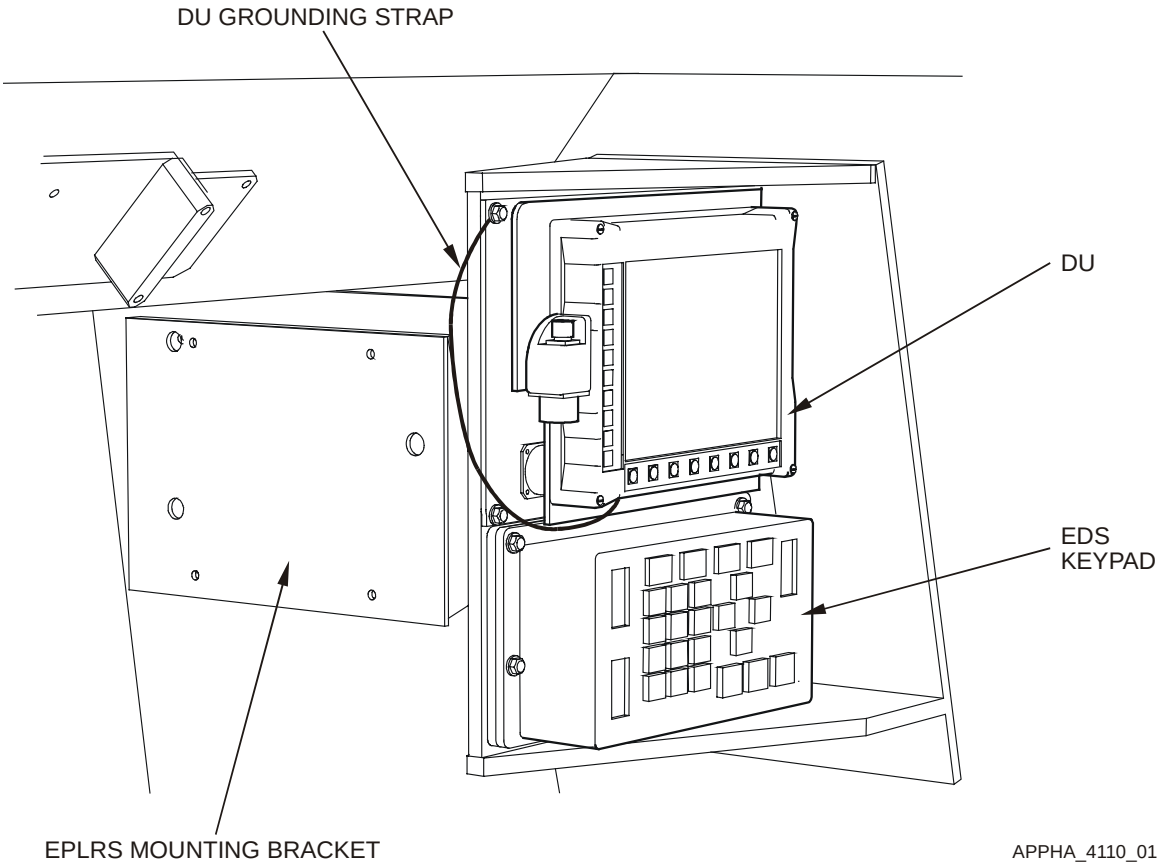

Figure A-4. DU And EDS Keypad Mounting

A–5 PLATFORM-UNIQUE TROUBLESHOOTING

There are no unique troubleshooting procedures for this vehicle.

A–6 REMOVAL/REPLACEMENT IN THE PLATFORM

Most installations must be tailored to the platform. Cables and brackets are unique to the installation. Before a part or assembly is removed from a vehicle, fill out a “Maintenance Request” DA Form 2407. One copy of this completed form must remain with the vehicle and the remaining copies must be kept with the faulty component. To prove the operability of the system after an item is replaced, perform the system Functional Check.

A–6.1 FUNCTIONAL CHECK

A–6.1.1 POWER UP

Power up and initialize all interface equipment and the AN/UYK-128(V) In Accordance With (IAW) the Operator’s Manual TM 11-7010-326-10, or Pocket Guide TB 11-7010-326-10.

A–6.1.2 VERIFICATION

NOTE

Observe that the Display Unit PWR, DISP and CPU green LED lights are lit.

a. Observe that the Session Manager box indicates the role is set for a Paladin.

b. Power up AFCS IAW TM 9-2350-314-10 and observe that the AFCS window displays.

c. Hide the GPS synchronization box by right clicking on the Task Bar [GPS synchronization] button.

d. Initialize the AFCS.

e. Left click on the Task Bar [GPS synchronization] button and observe that GPS synchronization was achieved.

f. At the Session Manager screen, select OPS button to display the OPS screen.

g. Verify the GPS status is either green or amber on the Classification/Status Bar.

h. Verify the Communications status is either green or amber on the Classification/Status Bar.

A–6.1.3 POWER DOWN

a. Power down AFCS IAW TM 9-2350-314-10.

b. Power down all interface equipment and the AN/UYK-128(V) IAW Operator’s Manual TM 11-7010-326-10, or Pocket Guide TB 11-7010-326-10.

A–6.2 REMOVE/REPLACE W1 POWER CABLE

Refer to Figure A-5.

A–6.2.1 REMOVE W1 POWER CABLE

WARNING

Before conducting maintenance involving the removal or replacement of system components, ensure that all power to the FBCB2 system is off (including power from the vehicle). Failure to comply with warning may result in equipment damage or injury to personnel.

a. Power down AFCS IAW TM 9-2350-314-10.

b. Power down AN/UYK-128(V) system IAW Operator's Manual TM 11-7010-326-10, or Pocket Guide TB 11-7010-326-10.

c. Turn Master Power Switch OFF.

d. Disconnect W1-P1 cable connector from Power Conditioning Unit (PCU) J8 connector.

e. Disconnect W1-J1 cable connector from Utility Power Interface (UPI) cable W27-P2 connector.

f. Disconnect W1-P2 cable connector from PU J1 connector.

g. Install protective cap on PU J1 connector.

NOTE

Note cable routing and tie-wrap locations before removing cable or tie-wraps.

h. Remove tie-wraps securing W1 cable using diagonal wire cutters.

i. Remove W1 power cable (1).

A–6.2.2 REPLACE W1 POWER CABLE

a. Route W1 power cable (1).

b. Remove protective cap from PU J1 connector.

c. Connect W1-P2 cable connector to PU J1 connector.

d. Connect W1-J1 cable connector to Utility Power Interface (UPI) cable W27-P2 connector.

e. Connect W1-P1 cable connector to Power Conditioning Unit (PCU) J8 connector.

f. Secure W1 cable using tie-wraps, as applicable.

g. Dress tie-wraps using diagonal wire cutters.

h. Turn Master Power Switch ON.

i. Perform the Functional Check of paragraph A–6.1.

A–6.3 REMOVE/REPLACE W2 DISPLAY CABLE

Refer to Figure A-5.

A–6.3.1 REMOVE W2 DISPLAY CABLE

WARNING

Before conducting maintenance involving the removal or replacement of system components, ensure that all power to the FBCB2 system is off (including power from the vehicle). Failure to comply with warning may result in equipment damage or injury to personnel.

a. Power down AFCS IAW TM 9-2350-314-10.

b. Power down AN/UYK-128(V) system IAW Operator's Manual TM 11-7010-326-10, or Pocket Guide TB 11-7010-326-10.

c. Turn Master Power Switch OFF.

d. Disconnect W2-P1 cable connector from PU J4 connector.

e. Install protective cap on PU J4 connector.

f. Disconnect W2-P2 cable connector from display J1 connector.

g. Install protective cap on display J1 connector.

NOTE

Note cable routing and tie-wrap locations before removing cables or tie-wraps.

h. Remove tie-wraps from W2 cable using diagonal wire cutters.

i. Loosen four captive screws on EDS Keypad using a 7/16" socket with ratchet and 3" extension.

j. Position EDS Keypad to allow removal of W2 display cable.

k. Remove W2 display cable (2).

A–6.3.2 REPLACE W2 DISPLAY CABLE

a. Route W2 display cable (2).

b. Reposition EDS Keypad and tighten four captive screws using a 7/16" socket with ratchet and 3" extension.

c. Remove protective cap from display J1 connector.

d. Connect W2-P2 cable connector to display J1 connector.

e. Remove protective cap from PU J4 connector.

f. Connect W2-P1 cable connector to PU J4 connector.

g. Secure W2 cable and ground strap using tie-wraps.

h. Dress tie-wraps using diagonal wire cutters.

i. Turn Master Power Switch ON.

j. Perform the Functional Check of paragraph A–6.1.

A–6.4 REMOVE/REPLACE W3 SERIAL INTERFACE ADAPTER DEVICE (SIAD)

Refer to Figure A-5.

A–6.4.1 REMOVE W3 SERIAL INTERFACE ADAPTER DEVICE (SIAD)

WARNING

Before conducting maintenance involving the removal or replacement of system components, ensure that all power to the FBCB2 system is off (including power from the vehicle). Failure to comply with warning may result in equipment damage or injury to personnel.

a. Power down AFCS IAW TM 9-2350-314-10.

b. Power down AN/UYK-128(V) system IAW Operator's Manual TM 11-7010-326-10, or Pocket Guide TB 11-7010-326-10.

c. Turn Master Power Switch OFF.

d. Disconnect W3N-P1 cable connector from W3 SIAD J1 connector.

e. Disconnect W3E-P1 EDS Keypad cable connector from W3 SIAD J4 connector.

f. Install protective cap on W3 SIAD J4 connector.

g. Disconnect W3 SIAD-P1 cable connector from PU J3 connector.

h. Install protective cap on PU J3 connector.

NOTE

Note cable routing and tie-wrap locations before removing cable or tie-wraps.

i. Remove tie-wraps securing W3 SIAD using diagonal wire cutters.

j. Remove two W3 SIAD mounting screws using a No. 2 cross tip screwdriver.

k. Remove W3 SIAD (7).

A–6.4.2 REPLACE W3 SERIAL INTERFACE ADAPTER DEVICE (SIAD)

a. Route W3 SIAD (7) into original position, over mounting inserts.

b. Install two W3 SIAD mounting screws using a No. 2 cross tip screwdriver.

c. Remove protective cap from PU J3 connector.

d. Connect W3 SIAD-P1 cable connector to PU J3 connector.

e. Remove protective cap from W3 SIAD J4 connector.

f. Connect W3E-P1 EDS Keypad cable connector to W3 SIAD J4 connector.

g. Connect W3N-P1 cable connector to W3 SIAD J1 connector.

h. Secure W3 SIAD using tie-wraps.

i. Dress tie-wraps using diagonal wire cutters.

j. Turn Master Power Switch ON.

k. Perform Functional Check IAW paragraph A–6.1.

A–6.5 REMOVE/REPLACE W3E EDS KEYPAD CABLE

Refer to Figure A-5.

A–6.5.1 REMOVE W3E EDS KEYPAD CABLE

WARNING

Before conducting maintenance involving the removal or replacement of system components, ensure that all power to the FBCB2 system is off (including power from the vehicle). Failure to comply with warning may result in equipment damage or injury to personnel.

a. Power down AFCS IAW TM 9-2350-314-10.

b. Power down AN/UYK-128(V) system IAW Operator's Manual TM 11-7010-326-10, or Pocket Guide TB 11-7010-326-10.

c. Turn Master Power Switch OFF.

d. Disconnect W3E-P1 cable connector from W3 SIAD J4 connector.

e. Install protective cap on W3 SIAD J4 connector.

f. Disconnect W3E-P2 cable connector from EDS Keypad J2 connector.

NOTE

Note cable routing and tie-wrap locations before removing cable or tie-wraps.

g. Remove tie-wraps from W3E cable using diagonal wire cutters.

h. Remove W3E EDS cable (5).

A–6.5.2 REPLACE W3E EDS KEYPAD CABLE

a. Route W3E EDS cable (5).

b. Connect W3E-P2 cable connector to EDS Keypad J2 connector.

c. Remove protective cap from W3 SIAD J4 connector.

d. Connect W3E-P1 cable connector to W3 SIAD J4 connector.

e. Secure W3E cable using tie-wraps.

f. Dress tie-wraps using diagonal wire cutters.

g. Turn Master Power Switch ON.

h. Perform Functional Check IAW paragraph A–6.1.

A–6.6 REMOVE/REPLACE W3N INC CABLE

Refer to Figure A-5.

A–6.6.1 REMOVE W3N INC CABLE

WARNING

Before conducting maintenance involving the removal or replacement of system components, ensure that all power to the FBCB2 system is off (including power from the vehicle). Failure to comply with warning may result in equipment damage or injury to personnel.

a. Power down AFCS IAW TM 9-2350-314-10.

b. Power down AN/UYK-128(V) system IAW Operator's Manual TM 11-7010-326-10, or Pocket Guide TB 11-7010-326-10.

c. Turn Master Power Switch OFF.

d. Disconnect W3N-P1 cable connector from W3 SIAD J1 connector.

e. Disconnect W3N-P2 cable connector from SINCGARS INC J6 connector.

NOTE

Note cable routing and tie-wrap locations before removing cable or tie-wraps.

f. Remove tie-wraps securing W3N cable using diagonal cutters.

g. Remove W3N cable (4).

A–6.6.2 REPLACE W3N INC CABLE

a. Route W3N cable (4).

b. Connect W3N-P2 cable connector to SINCGARS INC J6 connector.

c. Connect W3N-P1 cable connector to W3 SIAD J1 connector.

d. Secure W3N cable using tie-wraps.

e. Dress tie-wraps using diagonal wire cutters.

f. Turn Master Power Switch ON.

g. Perform Functional Check IAW paragraph A–6.1.

A–6.7 REMOVE/REPLACE W4 AUDIO CABLE

Refer to Figure A-5.

A–6.7.1 REMOVE W4 AUDIO CABLE

WARNING

Before conducting maintenance involving the removal or replacement of system components, ensure that all power to the FBCB2 system is off (including power from the vehicle). Failure to comply with warning may result in equipment damage or injury to personnel.

a. Power down AFCS IAW TM 9-2350-314-10.

b. Power down AN/UYK-128(V) system IAW Operator's Manual TM 11-7010-326-10, or Pocket Guide TB 11-7010-326-10.

c. Turn Master Power Switch OFF.

d. Disconnect W4-P1 cable connector from Master Control Station (MCS) J3 connector (CD-82/VRC J3).

e. Disconnect W4-P2 cable connector from W10-P2 Alarm cable connector.

f. Disconnect W4-J1 cable connector from PU J2 connector.

g. Install protective cap on PU J2 connector.

NOTE

Note cable routing and tie-wrap locations before removing cable or tie-wraps.

h. Remove tie-wraps securing W4 cable using diagonal wire cutters.

i. Remove W4 cable (3).

A–6.7.2 REPLACE W4 AUDIO CABLE

a. Route W4 cable (3).

b. Connect W4-P2 cable connector to W10-P2 Alarm cable connector.

c. Connect W4-P1 cable connector to Master Control Station (MCS) J3 connector (CD-82/VRC J3).

d. Remove protective cap from PU J2 connector.

e. Connect W4-J1 cable connector to PU J2 connector.

f. Secure W4 cable using tie-wraps.

g. Dress tie-wraps using diagonal wire cutters.

h. Turn Master Power Switch ON.

i. Perform Functional Check IAW paragraph A–6.1.

A–6.8 REMOVE/REPLACE W1A EPLRS POWER CABLE

Refer to Figure A-5.

A–6.8.1 REMOVE W1A EPLRS POWER CABLE

WARNING

Before conducting maintenance involving the removal and replacement of system components, ensure that all power to the FBCB2 system is off (including power from the vehicle). Failure to comply with warning may result in equipment damage or injury to personnel.

a. Power down AFCS IAW TM 9-2350-314-10.

b. Power down AN/UYK-128(V) system IAW Operator's Manual TM 11-7010-326-10, or Pocket Guide TB 11-7010-326-10.

c. Power down EPLRS IAW TM 11-5825-283-10.

d. Power down SINCGARS IAW TM 11-5820-890-10-8.

e. Turn Master Power Switch OFF.

f. Disconnect W1A-P2 cable connector from EPLRS J1 connector.

g. Disconnect W1A-P1 cable connector from VAA J2 connector.

NOTE

Note cable routing and tie-wrap locations before removing cable or tie-wraps.

h. Remove tie-wraps securing W1A cable using diagonal wire cutters.

i. Remove W1A EPLRS power cable (6).

A–6.8.2 REPLACE W1A EPLRS POWER CABLE

a. Route W1A EPLRS power cable (6).

b. Connect W1A-P1 cable connector to VAA J1 connector.

c. Connect W1A-P2 cable connector to EPLRS J1 connector.

d. Secure W1A cable using tie-wraps.

e. Dress tie-wraps using diagonal wire cutters.

f. Turn Master Power Switch ON.

g. Perform EPLRS Functional Check IAW TM 11-5825-283-10.

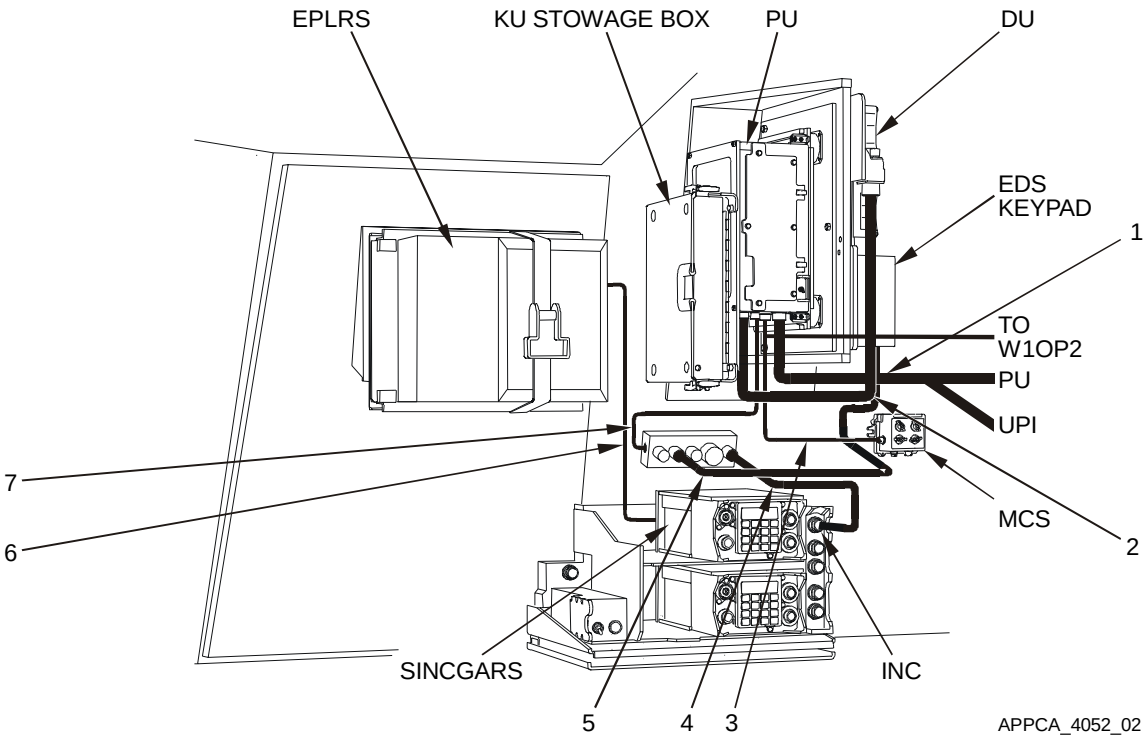

Figure A-5. Cable Run

Key and Parts List for Figure A-5

ITEM NO.	NOMENCLATURE	CAGE CODE	PART NUMBER	NSN	QTY	SMR
1	Cable Assembly W1	0J198	881279-1	5995-01-478-4870	1	PAODD
2	Cable Assembly W2	0J198	881327-2	5995-01-478-4876	1	PAODD
3	Cable Assembly W4	0J198	881315-1		1	PAODD
4	Cable Assembly W3N	0J198	881336-1	5995-01-478-4913	1	PAODD
5	Cable Assembly W3E	0J198	881284-1	5995-01-478-4935	1	PAODD
6	Cable Assembly W1A	0J198	881278-1	5995-01-478-5079	1	PAODD
7	Adapter Assy SIAD W3	0J198	881331-1	4920-01-478-3722	1	PAODD
--	Holder, Cable, Tie 2w	39428	7566K27		*25	PAOZZ
--	Strap, Tie Down, Elect	39428	7130K31		*50	PAOZZ

A–6.9 REMOVE/REPLACE PU ISOLATION ASSEMBLY

Refer to Figure A-6.

NOTE

Ground straps are attached to components at one end (PU and DU) and a frame ground at the other end. Regardless of where the ground strap terminates, it is usually a burnished (void of paint) area. If the ground strap is removed from a burnished area, make sure to return it to the same burnished area. Where applicable, always connect the ground strap first when assembling, and disconnect the ground strap last when disassembling.

A–6.9.1 REMOVE PU ISOLATION ASSEMBLY

WARNING

Before conducting maintenance involving the removal or replacement of system components, ensure that all power to the FBCB2 system is off (including power from the vehicle). Failure to comply with warning may result in equipment damage or injury to personnel.

a. Power down AFCS IAW TM 9-2350-314-10.

b. Power down AN/UYK-128(V) system IAW Operator's Manual TM 11-7010-326-10, or Pocket Guide TB 11-7010-326-10.

c. Turn Master Power Switch OFF.

NOTE

Do not remove the Removable Hard Disk Drive Cartridge (RHDDC), locking device or keyboard stowage box from PU.

d. Remove PU IAW Unit Maintenance Manual TM 11-7010-326-20&P, Chapter 2.

e. Remove one hex head screw (5), lock washer (3), flat washer (2) and ground strap from PU isolation assembly bottom plate and thermal mounting bracket using a 9/16" socket with ratchet and 3" extension.

f. Remove remaining two hex head screws (1), flat washers (2), lock washers (3) and hex nuts (4) from PU isolation assembly bottom plate and thermal mounting bracket using a 9/16" socket with ratchet and 3" extension and 9/16" open-end wrench.

g. Remove the PU isolation assembly from thermal mounting bracket.

A–6.9.2 REPLACE PU ISOLATION ASSEMBLY

a. Align three PU isolation assembly bottom plate holes thermal mounting bracket installation holes.

NOTE

To ensure positive ground, PU ground strap must make direct contact with bare metal. Ensure PU ground strap is installed in its original location at the PU isolation assembly bottom plate mounting hole. Slip the lock washer, flat washer and then the ground strap on the mounting screw before installing and tightening screw.

b. Install one hex head screw (5), lock washer (3), flat washer (2) and ground strap on PU isolation assembly bottom plate and thermal mounting bracket using a 9/16” socket with ratchet and 3” extension.

c. Install remaining two hex head screws (1), flat washers (2), lock washers (3) and hex nuts (4) on PU isolation assembly bottom plate and thermal mounting bracket using a 9/16” socket with ratchet and 3” extension and 9/16” open-end wrench.

d. Install PU IAW Unit Maintenance Manual TM 11-7010-326-20&P, Chapter 2.

e. Turn Master Power Switch ON.

f. Perform Functional Check IAW paragraph A–6.1.

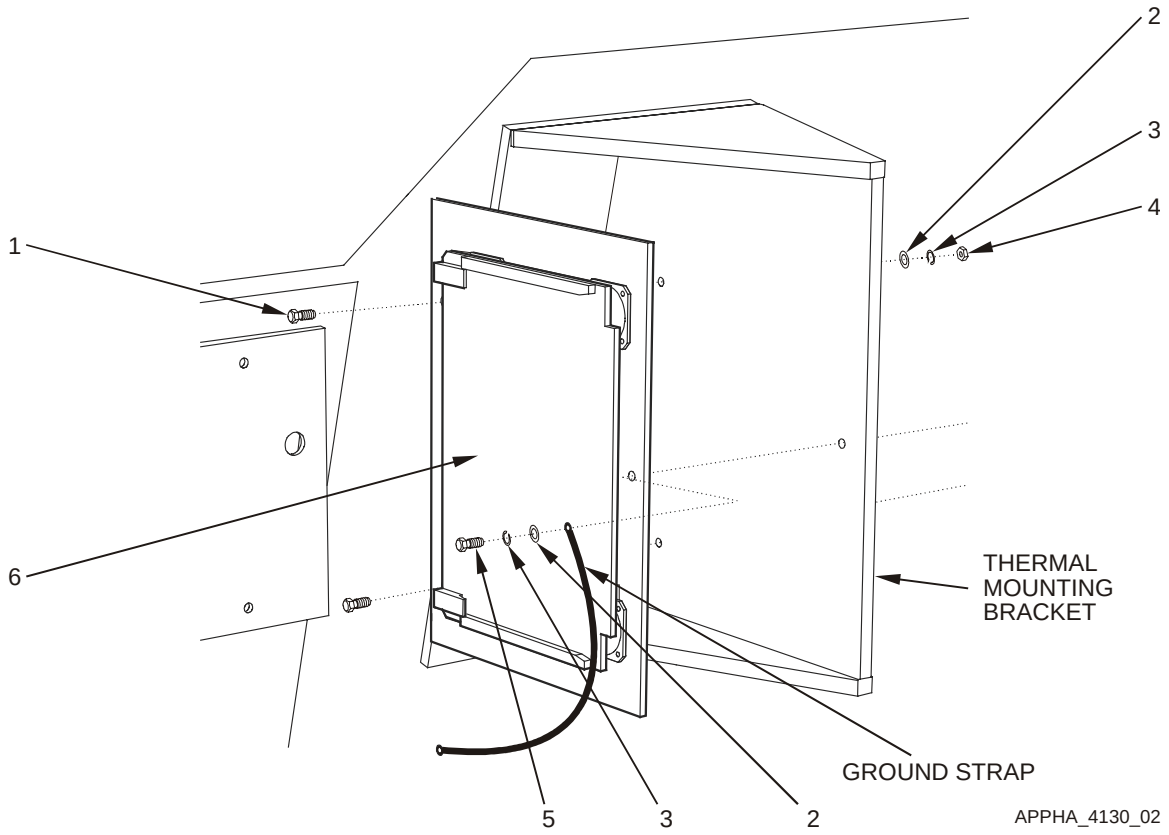

Figure A-6. Remove and Replace PU Isolation Assembly

Key and Parts List for Figure A-6

ITEM NO.	NOMENCLATURE	CAGE CODE	PART NUMBER	NSN	QTY	SMR
1	Screw, Cap, Hexagon	80204	B1821AH038C138N	5305-00-688-2111	2	PAOZZ
2	Washer, Flat	96906	MS27183-14	5310-00-080-6004	3	PAOZZ
3	Washer, Lock	96906	MS35338-46	5310-00-637-9541	3	PAOZZ
4	Nut, Plain, Hexagon	96906	MS35649-2382	5310-00-056-3395	2	PAOZZ
5	Screw, Cap, Hexagon	80204	B1821AH038C100N	5305-01-386-0489	1	PAOZZ
6	(PU isolation assembly) Plate, Resilient Mount PU	0J198	881280-1		1	PAODD
--	Bracket, Mounting PU	0J198	861865-1		1	XBOOO
--	Bracket, Locking	0J198	861871-1		1	XBOZZ
--	Screw	80205	MS35190-253	5305-00-059-4568	2	PAOZZ

A–6.10 REMOVE/REPLACE 10.4” DU ISOLATION ASSEMBLY

Refer to Figure A-7.

NOTE

Ground straps are attached to components at one end (PU and DU) and a frame ground at the other end. Regardless of where the ground strap terminates, it is usually a burnished (void of paint) area. If the ground strap is removed from a burnished area, make sure to return it to the same burnished area. Where applicable, always connect the ground strap first when assembling, and disconnect the ground strap last when disassembling.

A–6.10.1 REMOVE 10.4” DU ISOLATION ASSEMBLY

WARNING

Before conducting maintenance involving the removal and replacement of system components, ensure that all power to the FBCB2 system is off (including power from the vehicle). Failure to comply with warning may result in equipment damage or injury to personnel.

a. Power down AFCS IAW TM 9-2350-314-10.

b. Power down AN/UYK-128(V) system IAW Operator’s Manual TM 11-7010-326-10, or Pocket Guide TB 11-7010-326-10.

c. Turn Master Power Switch OFF.

NOTE

Due to physical placement, it is necessary to remove the ground strap from the display after the display has been removed from the display isolation assembly.

d. Remove DU IAW Unit Maintenance Manual TM 11-7010-326-20&P, Chapter 2.

NOTE

Note cable routing and tie-wrap locations before removing cable or tie-wraps.

e. Remove tie-wraps securing W2 cable and ground strap to DU isolation assembly using diagonal wire cutters.

f. Remove one hex head screw (4), lock washer (3), flat washer (2) and ground strap from DU isolation assembly bottom plate and display bracket using a 7/16” socket with ratchet and 3” extension.

g. While providing support to the display isolation assembly, remove remaining three hex head screws (4), lock washers (3) and flat washers (2) from DU isolation assembly bottom plate and display bracket using a 7/16” socket with ratchet and 3” extension.

A–6.10.2 REPLACE 10.4” DU ISOLATION ASSEMBLY

a. Align DU isolation assembly bottom plate holes with the display bracket installation holes.

NOTE

To ensure positive ground, DU ground strap must make direct contact with bare metal. Ensure DU ground strap is installed in its original location at the DU isolation assembly bottom plate mounting hole. Slide a lock washer, flat washer and ground strap onto mounting screw before installing through the installation hole.

b. Install one hex head screw (4), lock washer (3), flat washer (2) and ground strap on DU isolation assembly bottom plate and display bracket using a 7/16” socket with ratchet and 3” extension.

c. Install remaining three hex head screws (4), lock washers (3) and flat washers (2) on DU isolation assembly bottom plate and display bracket using a 7/16” socket with ratchet and 3” extension.

d. Secure W2 display cable and ground strap to DU isolation assembly bottom plate using tie-wraps.

e. Dress tie-wraps using diagonal wire cutters.

f. Install DU IAW Unit Maintenance Manual TM 11-7010-326-20&P, Chapter 2.

g. Turn Master Power Switch ON.

h. Perform Functional Check IAW paragraph A–6.1.

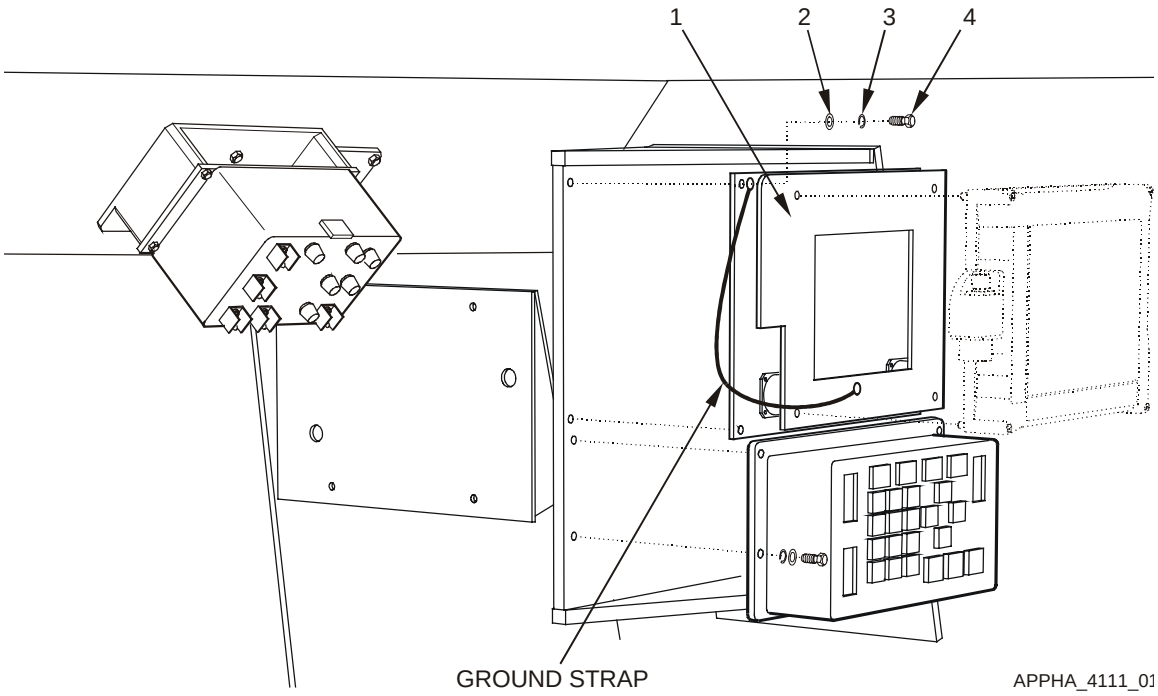

Figure A-7. Remove and Replace DU Isolation Assembly

Key and Parts List for Figure A-7

ITEM NO.	NOMENCLATURE	CAGE CODE	PART NUMBER	NSN	QTY	SMR
1	(DU isolation assembly) Plate, Resilient Mount DU	0J198	881281-1		1	PAODD
2	Washer, Flat	96906	MS27183-10	5310-00-809-4058	4	PAOZZ
3	Washer, Lock	96906	MS35338-44	5310-00-582-5965	4	PAOZZ
4	Screw, Cap, Hexagon	80204	B1821AH025C075N	5305-01-386-0495	4	PAOZZ
--	Bracket, Mounting DU	0J198	872843-1		1	XBOOO
--	Bracket, Locking	0J198	861871-3		1	XBOZZ
--	Washer, Lock	96906	MS35338-42	5310-00-045-3299	2	PAOZZ
--	Screw, Machine	80205	MS35190-253	5305-00-059-4568	2	PAOZZ

A–6.11 REMOVE/REPLACE EPLRS ISOLATION ASSEMBLY

Refer to Figure A-8.

A–6.11.1 REMOVE EPLRS ISOLATION ASSEMBLY

WARNING

Before conducting maintenance involving the removal and replacement of system components, ensure that all power to the FBCB2 system is off (including power from the vehicle). Failure to comply with warning may result in equipment damage or injury to personnel.

a. Power down AFCS IAW TM 9-2350-314-10.

b. Power down AN/UYK-128(V) system IAW Operator's Manual TM 11-7010-326-10, or Pocket Guide TB 11-7010-326-10.

c. Power down EPLRS radio (AN/GRC-229) IAW TM-11-5825-283-10.

d. Turn Master Power Switch to OFF.

e. Release web strap ratchet and unfasten web strap (2) around EPLRS radio.

f. Remove EPLRS radio IAW Unit Maintenance Manual TM 11-5825-283-20&P.

g. Remove one hex head screws (10), lock washers (9), flat washers (8) and safety lanyard (7) using a 7/16" socket with ratchet and 3" extension.

h. Remove remaining three hex head screws (10), lock washers (9) and flat washers (8) using a 7/16" socket with ratchet and 3" extension.

i. Remove EPLRS isolation assembly from EPLRS radio bracket.

j. Secure the web strap (2) on the EPLRS isolation assembly (1) using web strap ratchet.

A–6.11.2 REPLACE EPLRS ISOLATION ASSEMBLY

a. Align the four holes in the EPLRS isolation assembly bottom plate with the holes in the EPLRS radio bracket.

b. Install three hex head screws (10), lock washers (9) and flat washers (8) using a 7/16" socket with ratchet and 3" extension.

c. Install one hex head screws (10), lock washers (9), flat washers (8) and safety lanyard (7) using a 7/16" socket with ratchet and 3" extension.

d. Release web strap ratchet and secure web strap (2) on the EPLRS isolation assembly top plate using the ratchet device.

e. Install EPLRS radio (AN/GRC-229) IAW TM 11-5825-283-20&P.

f. Secure web strap (2) around the EPLRS radio using the ratchet device.

g. Turn Master Power Switch to ON.

h. Perform EPLRS radio Functional Check IAW TM 11-5825-283-10.

A–6.12 REMOVE/REPLACE EPLRS WEB STRAP

Refer to Figure A-8.

A–6.12.1 REMOVE EPLRS WEB STRAP

NOTE

The new web strap should be routed and the ratchet handle positioned in the same manner as the old strap. Before removing the web strap note the routing of the strap between the top and bottom plates of the EPLRS isolation assembly and the position of the ratchet handle.

a. Release and unfasten web strap around EPLRS radio using ratchet.

b. Remove cap nut (4), lock washer (5) and flat washer (6) from safety lanyard (7) attached to ratchet assembly using a No. 1 cross tip screw driver and 5/16” open end wrench.

c. Remove web strap from EPLRS isolation assembly.

A–6.12.2 REPLACE EPLRS WEB STRAP

a. Install web strap between top and bottom plate of EPLRS isolation assembly.

b. Install safety lanyard (7) eyelet on mounting screw on web strap ratchet.

c. Install safety lanyard (7), flat washer (6), lock washer (6) and cap nut (4) using a No. 1 cross tip screwdriver and a 5/16” open end wrench.

d. Secure web strap (2) around EPLRS radio using ratchet assembly.

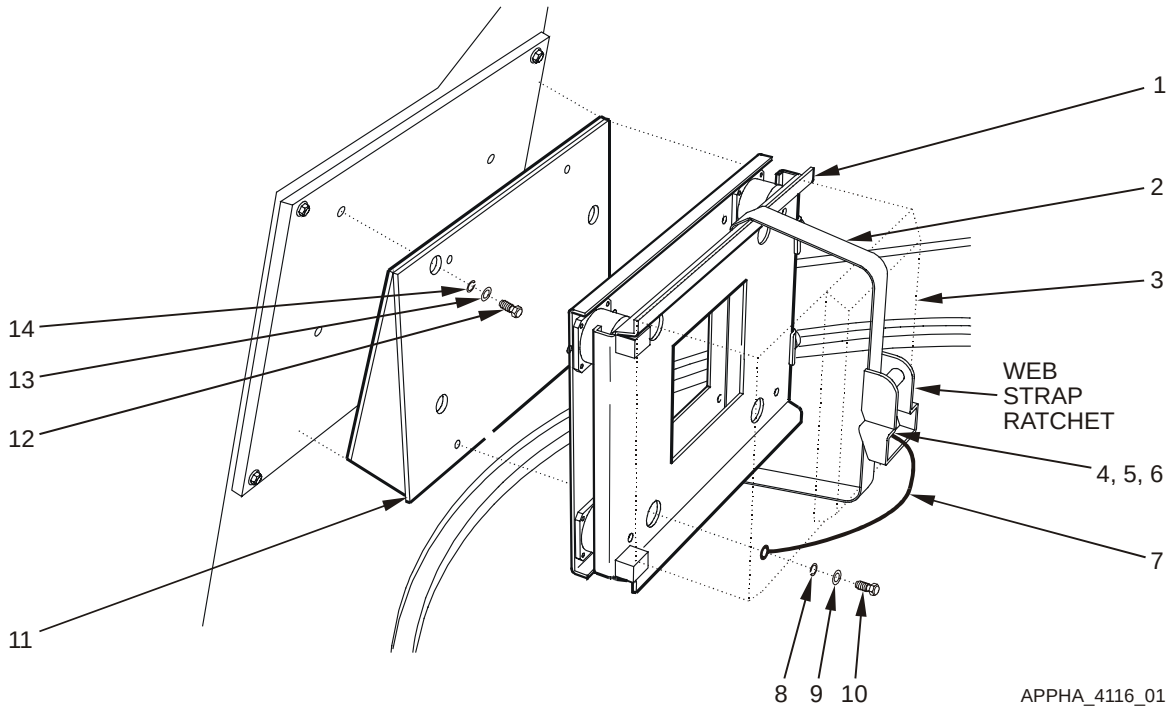

Figure A-8. Remove and Replace EPLRS Isolation Assembly and Web Strap

Key and Parts List for Figure A-8

ITEM NO.	NOMENCLATURE	CAGE CODE	PART NUMBER	NSN	QTY	SMR
1	(EPLRS Isolation Assembly) Mount, Resilient EPLRS	0J198	881267-1		1	PAODD
2	(Wed Strap) Strap, Nylon, Ratchet	39428	8842T18		1	PAOZZ
3	Webbing Protector	39428	3339T1		2	PAOZZ
4	Nut, Cap	96906	MS24680-25	5310-00-916-9480	1	PAOZZ
5	Washer, Lock	96906	MS35338-44	5310-00-582-5965	1	PAOZZ
6	Washer, Flat	96906	MS27183-10	5310-00-809-4058	1	PAOZZ
7	Lanyard, Wire Rope	39428	30645T11		1	PAOZZ
8	Washer, Flat	96906	MS27183-10	5310-00-809-4058	4	PAOZZ
9	Washer, Lock	96906	MS35338-44	5310-00-582-5965	4	PAOZZ
10	Screw	80204	B1821AH025C050N	5305-01-420-5112	4	PAOZZ
11	Bracket, EPLRS	0J198	881282-1		1	XBOZZ
12	Screw, Cap, Hexagon	80204	B1821AH038C100N	5305-01-386-0489	3	PAOZZ
13	Washer, Flat	96906	MS27183-14	5310-00-080-6004	3	PAOZZ
14	Washer, Lock	96906	MS35338-46	5310-00-637-9541	3	PAOZZ
--	Bracket, EPLRS Antenna	0J198	881283-1		1	XBOZZ
--	Screw, Cap, Hexagon	80204	B1821AH038C100N	5305-01-386-0489	4	PAOZZ
--	Washer, Flat	96906	MS27183-14	5310-00-080-6004	4	PAOZZ
--	Washer, Lock	96906	MS35338-46	5310-00-637-9541	4	PAOZZ
--	Tray, Oddment	0J198	881268-1		1	XBOOO
--	Bracket, Hydraulic	0J198	881313-1		1	XBOZZ
--	Screw, Cap, Hexagon	80204	B1821AH025F075N	5306-00-068-0513	8	PAOZZ
--	Washer, Flat	96906	MS27183-10	5310-00-809-4058	8	PAOZZ
--	Washer, Lock	96906	MS35338-44	5310-00-582-5965	8	PAOZZ

A–6.13 REMOVE/REPLACE KEYBOARD UNIT (KU) STOWAGE BOX

Refer to Figure A-9.

A–6.13.1 REMOVE KEYBOARD UNIT (KU) STOWAGE BOX

NOTE

Do not remove the Removable Hard Disk Drive Cartridge (RHDDC) or locking device from PU.

a. Remove PU IAW Unit Maintenance Manual TM 11-7010-326-20&P, Chapter 2.

b. Remove KU from stowage box, if stowed.

c. Loosen four KU stowage box captive screws (6) until the captive screws move freely using a No. 2 cross-tip screwdriver.

d. Remove KU stowage box (7) from keyboard mounting plate (4).

A–6.13.2 REPLACE KEYBOARD UNIT (KU) STOWAGE BOX

a. Align four KU stowage box captive screws with keyboard mounting plate (4) installation holes.

b. Tighten four captive screws (6) using a No. 2 cross-tip screwdriver.

c. Replace PU IAW Unit Maintenance Manual TM 11-7010-326-20&P, Chapter 2.

d. Stow KU, if necessary.

e. Perform Functional Check IAW paragraph A–6.1.

A–6.14 REMOVE/REPLACE KEYBOARD UNIT (KU) STOWAGE BOX MOUNTING PLATE

Refer to Figure A-9.

NOTE

The KU Stowage Box Mounting Plate is only removed when the PU is being replaced. If the PU is being replaced follow these procedures to remove the KU Stowage Box Mounting Plate from the original PU and install the mounting plate on the replacement PU.

A–6.14.1 REMOVE KEYBOARD UNIT (KU) STOWAGE BOX MOUNTING PLATE

a. Remove PU IAW Unit Maintenance Manual TM 11-7010-326-20&P, Chapter 2.

b. Remove keyboard from keyboard stowage box, if stowed.

c. Loosen four KU stowage box captive screws (6) until the captive screws move freely using a No. 2 cross-tip screwdriver.

d. Remove KU stowage box from keyboard mounting plate (4).

e. Remove four machine screws (1), lock washers (2) and flat washers (3) using a No. 2 cross tip screwdriver.

f. Remove keyboard stowage box mounting plate (4) from PU.

A–6.14.2 REPLACE KEYBOARD UNIT (KU) STOWAGE BOX MOUNTING PLATE

a. Align keyboard stowage box mounting plate with PU installation holes.

b. Install and tighten four machine screws (1), lock washers (2) and flat washers (3) using a No. 2 cross tip screwdriver

c. Align four KU stowage box captive screws (6) with keyboard mounting plate (4) installation holes.

d. Tighten four captive screws using a No. 2 cross-tip screwdriver.

e. Replace PU IAW Unit Maintenance Manual TM 11-7010-326-20&P, Chapter 2.

f. Stow keyboard, if necessary.

g. Perform Functional Check IAW paragraph A–6.1.

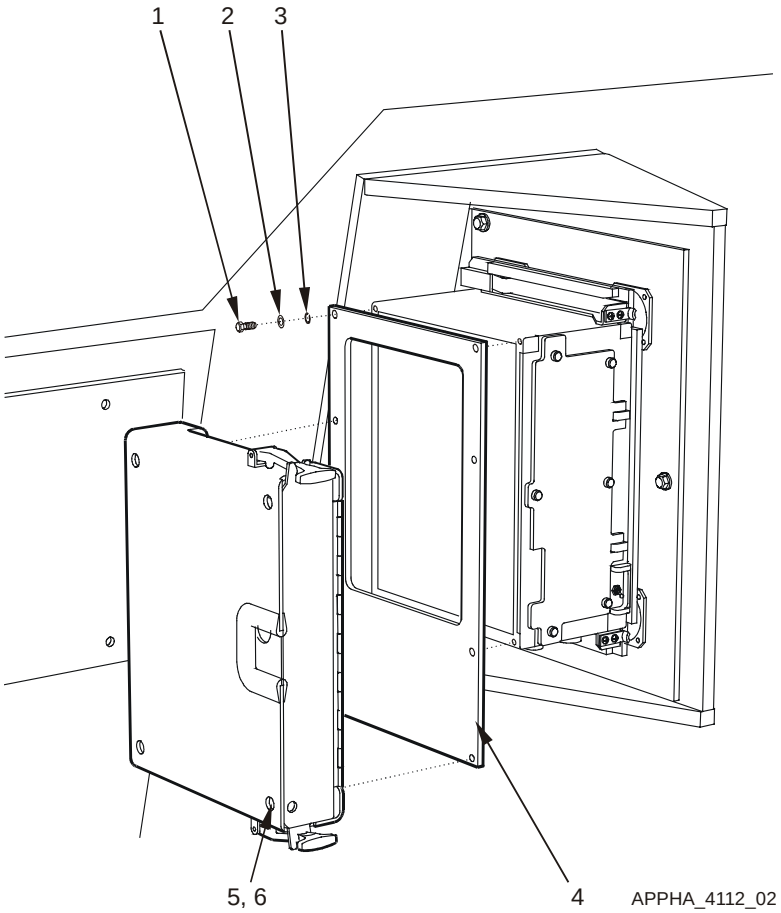

Figure A-9. Remove and Replace Keyboard Unit (KU) Stowage Box and Mounting Plate

Key and Parts List for Figure A-9

ITEM NO.	NOMENCLATURE	CAGE CODE	PART NUMBER	NSN	QTY	SMR
1	Screw, Machine	96906	MS35207-263	5305-00-989-7434	4	PAOZZ
2	Washer, Lock	96906	MS35338-43	5310-00-045-3296	4	PAOZZ
3	Washer, Flat	96906	MS27183-8	5310-00-809-8546	4	PAOZZ
4	Plate, Mounting Keyboard	0J198	881312-1		1	XBOOO
5	Retainer, Panel Screw	57177	214-03SS10-32		4	PAOZZ
6	Screw, Captive Panel	57177	PH207-05SS1032		4	PAOZZ
7	(KU Stowage Box) Box, Accessories, Stowage	0J198	872845-1	2540-01-481-5744	1	PAODD
--	Case, Keyboard	0J198	872845-11		1	XBOOO
--	Bottom, Stowage Box	0J198	872845-12		1	XBOOO
--	Side Rail, Keybrd Box	0J198	872845-13		1	XBOOO
--	Side Rail, Keybrd Box	0J198	872845-14		1	XBOOO
--	Door, Keyboard Box	0J198	872845-15		1	XBOOO
--	Hinge, Keyboard Box	0J198	872845-16		1	XBOOO
--	Strip, Rubber	0J198	872845-17		1	XBOOO
--	Rivet, Solid, Csk	96906	MS20426AD-4-5	5320-00-117-6950	6	PAOZZ
--	Label, Keyboard Box	0J198	881323-1		1	PAOZZ
--	Nut, Plain	96906	MS35649-262	5310-00-934-9747	3	PAOZZ
--	Grip, Handle Assy	0J198	861867-1		1	XBOOO
--	Grip, Handle	0J198	861869-1		1	XBOZZ
--	Screw, Machine	96906	MS35206-228	5305-00-984-4988	4	PAOZZ
--	Washer, Lock	96906	MS35338-41	5310-00-045-4007	4	PAOZZ
--	Tape, Shielding, Elect	39428	7648A34		1	XBOZZ

A–6.15 REMOVE/REPLACE KEYBOARD UNIT (KU) STOWAGE BOX DOOR LATCHES

Refer to Figure A-10.

A–6.15.1 REMOVE KEYBOARD UNIT (KU) STOWAGE BOX DOOR LATCHES

a. Pull rubber T-handles and unfasten KU stowage box door latches, if necessary.

b. Remove two pan head screws (1), lock washers (2) and flat washers (3) from each KU stowage box door latch (4) using a No. 2 cross-tip screwdriver.

c. Remove KU stowage box door latch (4).

A–6.15.2 REPLACE KEYBOARD UNIT (KU) STOWAGE BOX DOOR LATCHES

NOTE

The same KU stowage box door latch part is used for each side of the keyboard stowage box. There is a bumper on one side of the latch that should be positioned toward the side of the keyboard stowage box when fastened.

a. Align KU stowage box door latch mounting holes with mounting holes in KU stowage box.

b. Install and tighten two pan head screws (1), lock washers (2) and flat washers (3) for each KU stowage box door latch (4), using a No. 2 cross-tip screwdriver.

c. Pull rubber T-handles and fasten KU stowage box door latches.

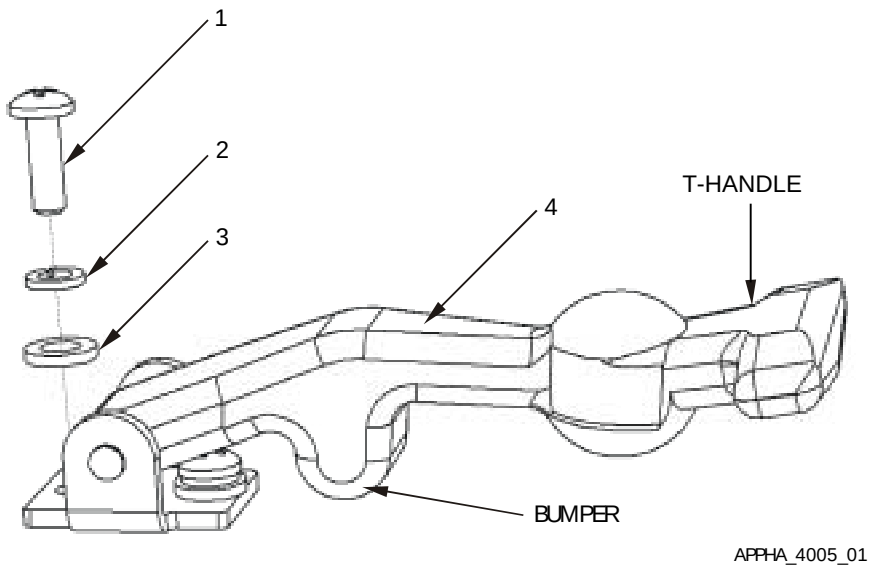

Figure A-10. Remove and Replace Keyboard Unit (KU) Stowage Box Door Latches

Key and Parts List for Figure A-10

ITEM NO.	NOMENCLATURE	CAGE CODE	PART NUMBER	NSN	QTY	SMR
1	Screw, Pan Head	96906	MS35206-229	5305-00-984-4989	14	PAOZZ
2	Washer, Lock	96906	MS35338-41	5310-00-045-4007	4	PAOZZ
3	Washer, Flat	96906	MS27183-5	5310-00-983-8483	16	PAOZZ
4	(KU stowage box door latch) Latch, Thumb	94222	37-20-071-20	5340-01-351-3340	2	PAOZZ

This page intentionally left blank.

APPENDIX B

SUPPLEMENTARY INFORMATION FOR

M1064 MORTAR CARRIER

TABLE OF CONTENTS

Page

B–1 GENERAL B–3

B–2 COMPONENT ITEM NUMBERS AND PART NUMBERS B–3

B–3 SYSTEM INTERFACES B–3

B–3.1 MECHANICAL B–3

B–3.2 CABLE INTERFACES B–4

B–4 COMPONENT LOCATION B–6

B–4.1 GENERAL LOCATION B–6

B–4.2 MOUNTING B–7

B–5 PLATFORM-UNIQUE TROUBLESHOOTING B–10

B–6 REMOVAL/REPLACEMENT IN THE PLATFORM B–10

B–6.1 FUNCTIONAL CHECK B–10

B–6.2 REMOVE/REPLACE W1 POWER CABLE B–11

B–6.3 REMOVE/REPLACE W2 DISPLAY CABLE B–13

B–6.4 REMOVE/REPLACE W3 SERIAL INTERFACE ADAPTER DEVICE (SIAD) B–15

B–6.5 REMOVE/REPLACE W3P PLGR CABLE B–16

B–6.6 REMOVE/REPLACE W3N INC CABLE B–17

B–6.7 REMOVE/REPLACE W4 AUDIO CABLE B–18

B–6.8 CABLE ROUTING B–20

B–6.9 REMOVE/REPLACE PU ISOLATION ASSEMBLY B–22

B–6.10 REMOVE/REPLACE DU ISOLATION ASSEMBLY B–25

B–6.11 REMOVE/REPLACE RAM-BALL ASSEMBLY B–28

B–6.12 REMOVE/REPLACE KEYBOARD UNIT (KU) STOWAGE BOX B–32

B–6.13 REMOVE/REPLACE KEYBOARD UNIT (KU) STOWAGE BOX DOOR LATCHES B–34

LIST OF ILLUSTRATIONS

Page
Figure B-1. Equipment Interface Block Diagram B–5
Figure B-2 Relative Component Locations B–6
Figure B-3. PU Mounting Rear Wall B–7
Figure B-4. KU Stowage Box Mounting B–8
Figure B-5. RAM-Ball Assembly and Display Unit Mounting B–9
Figure B-6. Cable Run B–20
Figure B-7. Remove and Replace PU Isolation Assembly B–23
Figure B-8. Remove and Replace DU Isolation Assembly B–27
Figure B-9. Remove and Replace RAM-Ball Assembly B–30
Figure B-10. Remove and Replace Keyboard Unit (KU) Stowage Box B–32
Figure B-11. Remove and Replace Keyboard Unit (KU) Stowage Box Door Latches B–34

B–1 GENERAL

This appendix describes the interfaces between the FBCB2 equipment and the M1064 Mortar Carrier. This appendix also identifies the component parts of the M1064 platform installation kit and details the removal and replacement procedures particular to the M1064 Mortar Carrier.

B–2 COMPONENT ITEM NUMBERS AND PART NUMBERS

Key and Parts List tables contained in the Removal and Replacement section of this Appendix serve a dual purpose. Use the Item Numbers in the Key to identify components and attaching hardware shown in the Figures illustrating the tasks. The nomenclature and part number for the hardware and equipment mounting components of the installation kit also are keyed to the Item Numbers in the tables. Additional parts ordering information, such as Contractor and Government Entity code (CAGE); National Stock Number (NSN); quantity; and Source, Maintenance, and Recoverability (SMR) codes, are provided. The Key and Parts List follow the task illustrations.

B–3 SYSTEM INTERFACES

B–3.1 MECHANICAL

The mechanical hardware-to-hardware interfaces include:

a. Cables

b. Processor Unit (PU)

c. Display Unit (DU)

d. Keyboard (KU)

B–3.2 CABLE INTERFACES

Figure B-1 illustrates a block diagram of the interface between FBCB2 equipment and the M1064 Mortar Carrier (Platform). Figure B-1 also shows the signal and control interfaces along with the terminal connector labels (e.g., P1, P2). The purpose of each cable is listed below:

Cable Name	Purpose
W1–Cable	Supplies vehicle power (28 VDC) to the AN/UYK-128 (V) computer and its subassemblies.
W2–Cable	Supplies power and signals to the Display Unit (DU) and Keyboard Unit (KU). Returns Man Machine Interface (MMI) information from the KU to the Processor Unit (PU).
W3–Cable	The Serial Interface Adapter Device (SIAD) is a conduit assembly that breaks out each of the serial interface ports to a connector.
W3P–Cable	Collects position and time information from the PLGR.
W3N–Cable	Provides duplex communication between the PU, Internet Controller (INC) and radios.
W4–Cable	Connects audio signals from the PU to the Intercom system and Combat Vehicle Crew (CVC) Helmet.
W5–Cable	The Expansion Interface Adapter Device (EIAD) is connected to the Universal Serial Bus (USB) cable only when this vehicle is to be used in a Tactical Operations Center (TOC) setup. When used in this configuration, the EIAD is connected between the PU J5 connector and local router
Ground Strap	Provides safety ground for the PU.
Ground Strap	Provides safety ground for the DU.

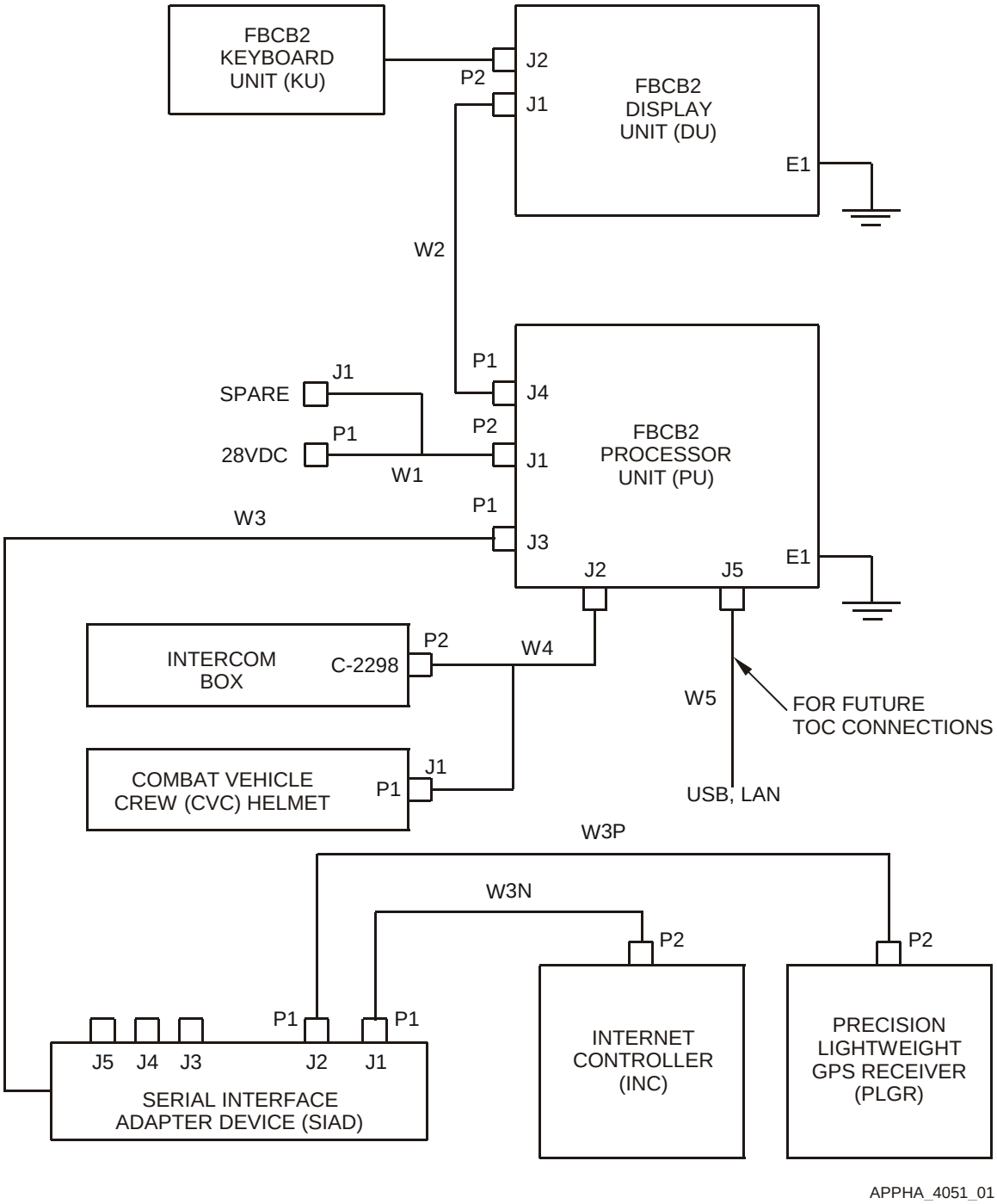

Figure B-1. Equipment Interface Block Diagram

B–4 COMPONENT LOCATION

B–4.1 GENERAL LOCATION

Figure B-2 shows the relative location of the FBCB2 computer equipment and mounting components in the mid-section and rear roadside corner of the vehicle.

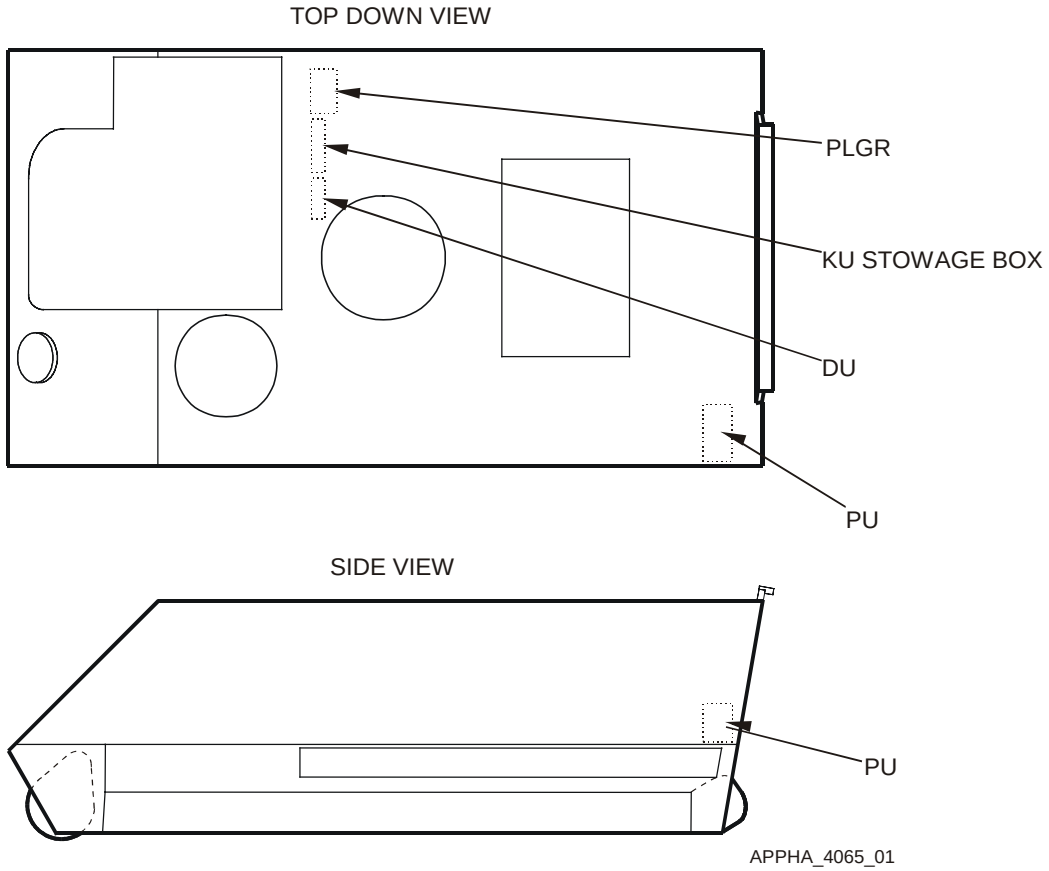

Figure B-2 Relative Component Locations

B–4.2 MOUNTING

B–4.2.1 PU MOUNTING

Figure B-3 shows how the PU is mounted on the back wall, above the fire extinguisher.

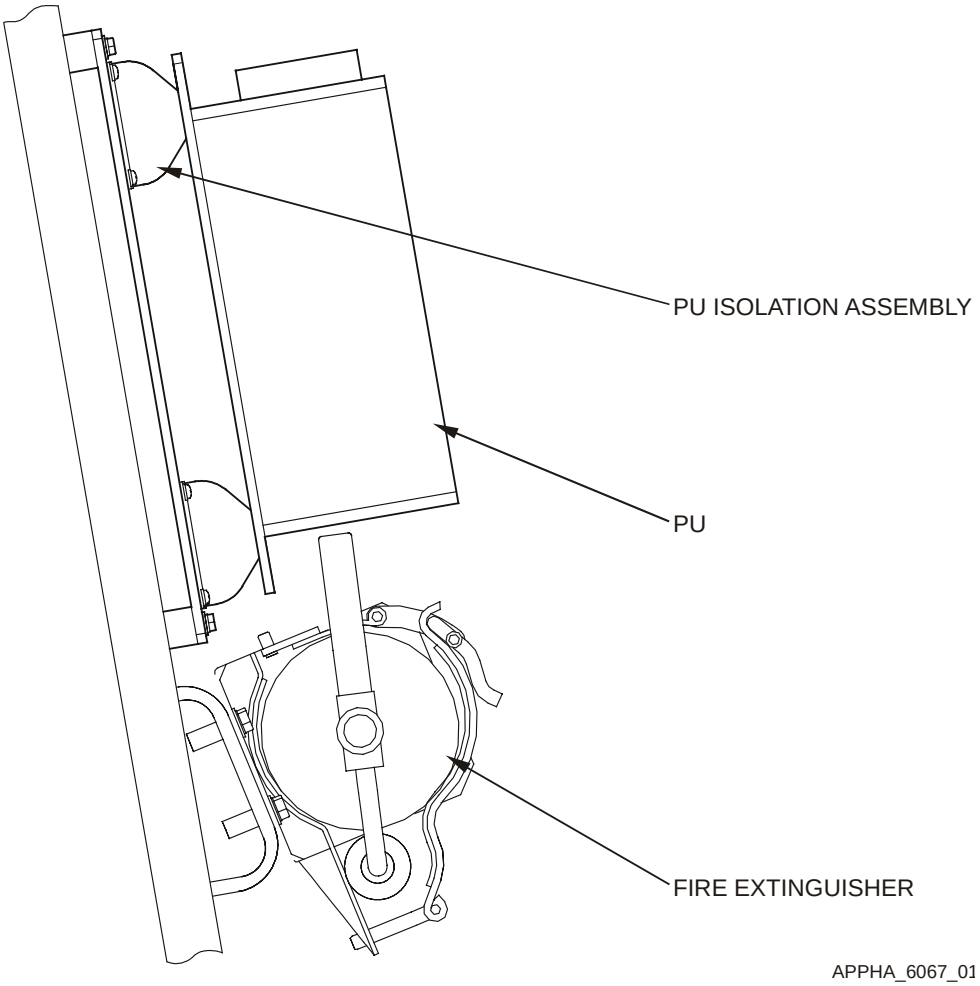

Figure B-3. PU Mounting Rear Wall

B–4.2.2 KU STOWAGE BOX MOUNTING

Figure B-4 shows the KU stowage box mounted on the engine access cover.

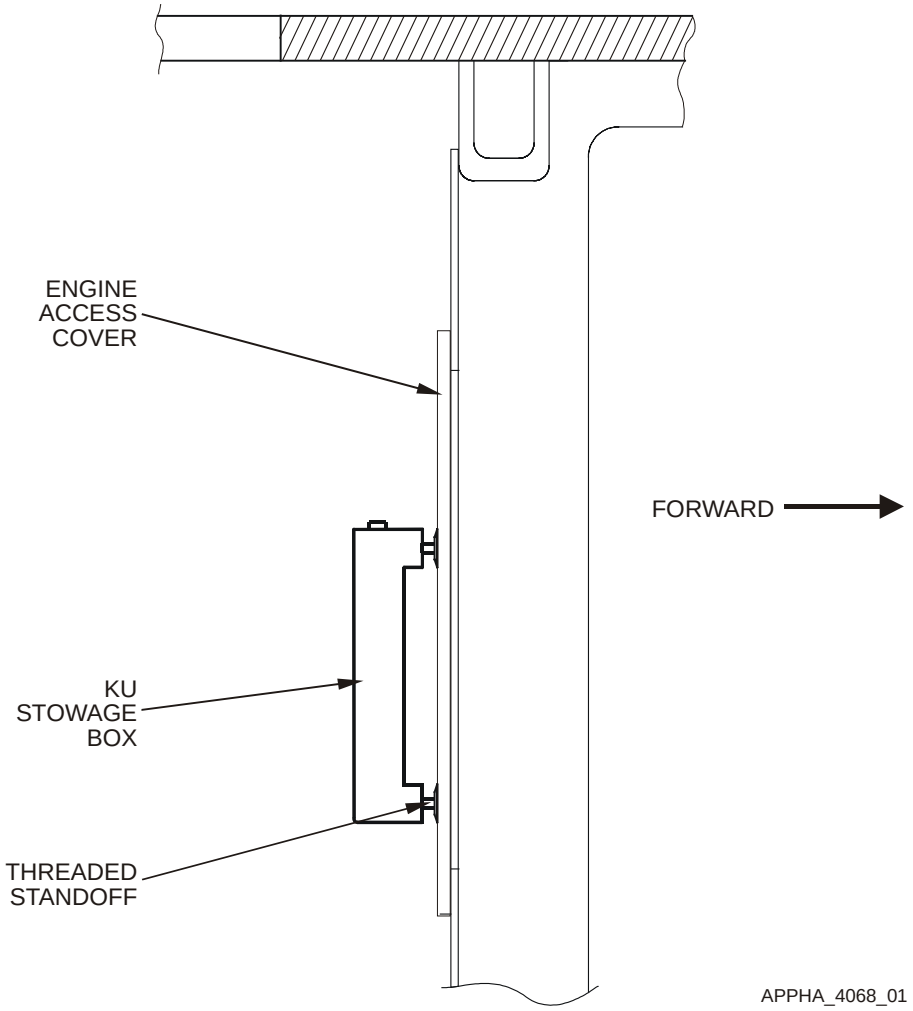

Figure B-4. KU Stowage Box Mounting

B–4.2.3 RAM-BALL ASSEMBLY AND DISPLAY UNIT MOUNTING

Figure B-5 shows the side view of the RAM-Ball assembly and Display Unit mounting on the ceiling.

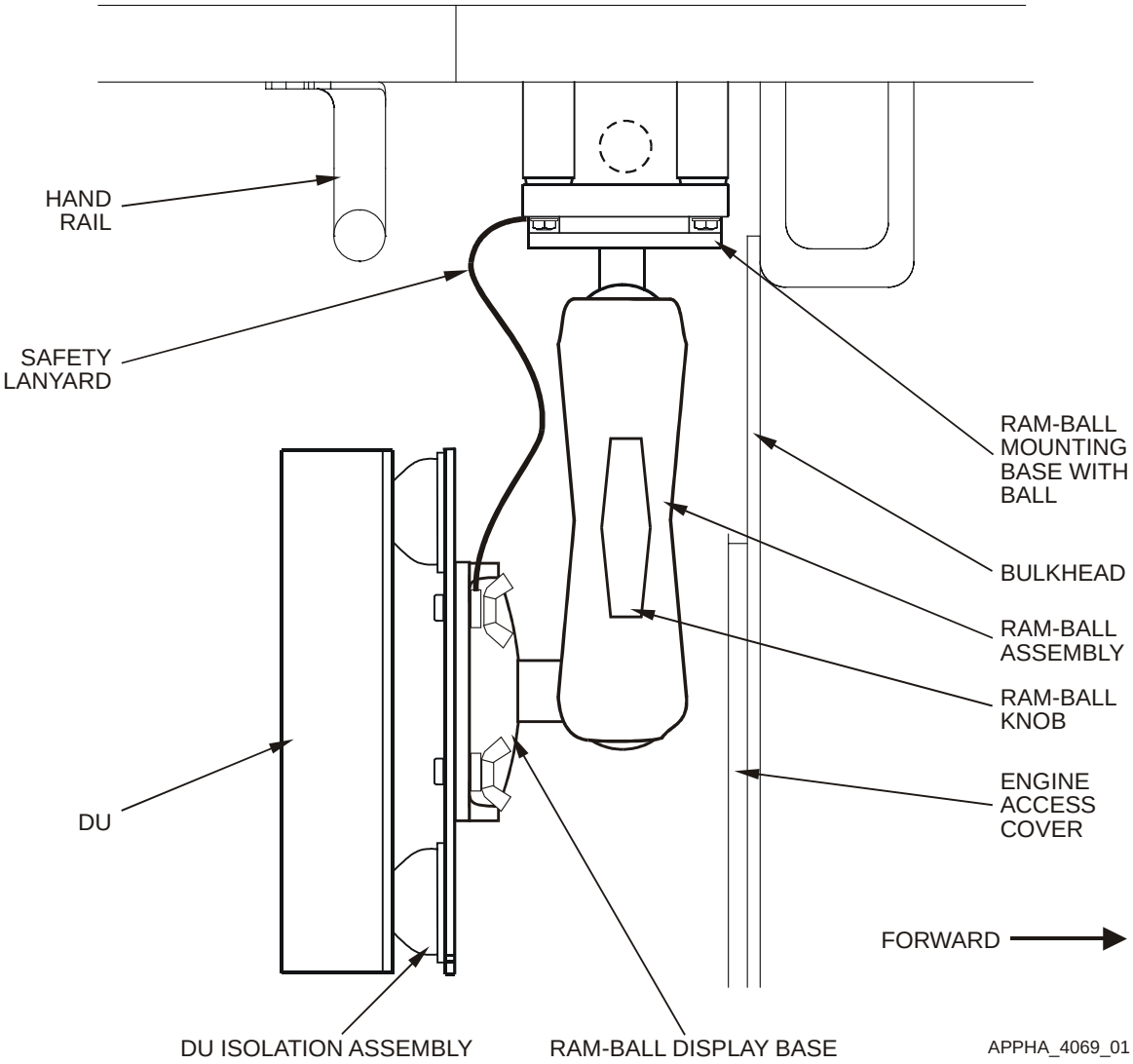

Figure B-5. RAM-Ball Assembly and Display Unit Mounting

B–5 PLATFORM-UNIQUE TROUBLESHOOTING

There are no unique troubleshooting procedures for this vehicle. However, if the upper ammunition storage rack has been removed for access to cables, the system Functional Check should be performed before reinstalling the ammunition storage rack.

B–6 REMOVAL/REPLACEMENT IN THE PLATFORM

Most installations must be tailored to the platform. Cables and brackets are unique to the installation. Before a part or assembly is removed from a vehicle, fill out a “Maintenance Request” DA Form 2407. One copy of this completed form must remain with the vehicle and the remaining copies must be kept with the faulty component. To prove the operability of the system after an item is replaced, perform the system Functional Check.

B–6.1 FUNCTIONAL CHECK

B–6.1.1 POWER UP

Power up and initialize all interface equipment and the AN/UYK-128(V) In Accordance With (IAW) the Operator’s Manual TM 11-7010-326-10, or Pocket Guide TB 11-7010-326-10.

B–6.1.2 VERIFICATION

NOTE

Observe that the Display Unit PWR, DISP and CPU green LED lights are lit.

a. Observe that the PLGR synchronizes with PU, indicated by the PLGR dialog box showing green.

b. Observe that the Router synchronizes with the PU, indicated by the Router dialog box showing green.

c. At the Session Manager screen, select OPS button to display the OPS screen.

d. Verify the GPS status is either green or amber on the Classification/Status Bar.

e. Verify the Communications status is either green or amber on the Classification/Status Bar.

B–6.1.3 POWER DOWN

Power down all interface equipment and the AN/UYK-128(V) IAW the Operator’s Manual TM 11-7010-326-10, or Pocket Guide TB 11-7010-326-10.

B–6.2 REMOVE/REPLACE W1 POWER CABLE

Refer to Figure B-6.

B–6.2.1 REMOVE W1 POWER CABLE

WARNING

Before conducting maintenance involving the removal and replacement of system components, ensure that all power to the FBCB2 system is off (including power from the vehicle). Failure to comply with warning may result in equipment damage or injury to personnel.

a. Power down AN/UYK-128(V) system IAW Operator's Manual TM 11-7010-326-10, or Pocket Guide TB 11-7010-326-10.

b. Power down SINCGARS IAW TM 11-5820-890-10-8.

NOTE

Remove ammunition from storage rack before continuing maintenance IAW TM 9-2350-261-20.

c. Disconnect W1-J1 cable connector from interface (spare) connector, if necessary.

d. Release and slide forward SINCGARS Vehicle Amplifier-Adapter (VAA) from Mounting Base (MB) IAW TM 11-5820-890-10-8.

e. Disconnect W1-P1 cable connector from the SINCGARS mounting base (MB) (MT-6352/VRC) A4-J2 connector.

f. Disconnect W1-P2 cable connector from PU J1 connector.

g. Install protective cap on PU J1 connector.

NOTE

The M1064 cables (except SIAD) are routed behind the ammunition storage rack. The ammunition storage rack must be removed for cable access. Exercise care when routing the cables behind the ammunition storage rack to avoid excessive bending, pinching, or cutting.

h. Remove ten 9/16" bolts and upper ammunition storage rack using a 9/16" socket with ratchet and 6" extension.

NOTE

Note cable routing and tie-wrap locations before removing cable or tie-wraps.

i. Remove tie-wraps securing W1 cable using diagonal wire cutters.

j. Remove W1 power cable (6).

B–6.2.2 REPLACE W1 POWER CABLE

a. Route W1 power cable (6) along existing cable harness.

b. Remove protective cap from PU J1 connector.

c. Connect W1-P2 cable connector to PU J1 connector.

d. Connect W1-P1 cable connector to SINCGARS Mounting Base (MB) (MT-6352/VRC) A4-J2 connector.

e. Connect W1-J1 cable connector to interface (spare) connector if necessary.

f. Secure VAA in original mounting position on mounting base IAW TM 11-5820-890-10-8.

g. Secure W1 cable using tie-wraps.

h. Dress tie-wraps using diagonal wire cutters.

i. Perform Functional Check IAW paragraph B–6.1.

NOTE

Inspect cables during and after ammunition storage rack installation. Ensure cables are not pinched behind upper ammunition storage rack.

j. Install upper ammunition storage rack and secure with ten 9/16” bolts using a 9/16” socket with ratchet and 6” extension.

B–6.3 REMOVE/REPLACE W2 DISPLAY CABLE

Refer to Figure B-6.

B–6.3.1 REMOVE W2 DISPLAY CABLE

WARNING

Before conducting maintenance involving the removal and replacement of system components, ensure that all power to the FBCB2 system is off (including power from the vehicle). Failure to comply with warning may result in equipment damage or injury to personnel.

a. Power down AN/UYK-128(V) system IAW Operator's Manual TM 11-7010-326-10, or Pocket Guide TB 11-7010-326-10.

b. Power down SINCGARS IAW TM 11-5820-890-10-8.

NOTE

Remove ammunition from ammunition storage rack before continuing maintenance IAW TM 9-2350-261-20.

c. Disconnect W2-P1 cable connector from PU J4 connector.

d. Install protective cap on PU J4 connector.

e. Disconnect W2-P2 cable connector from display J1 connector.

f. Install protective cap on display J1 connector.

NOTE

The M1064 cables (except SIAD) are routed behind the ammunition storage rack. The ammunition storage rack must be removed for cable access. Exercise care when routing the cables behind the ammunition storage rack to avoid excessive bending, pinching, or cutting.

g. Remove ten 9/16" bolts and upper ammunition storage rack using a 9/16" socket with ratchet and 6" extension.

NOTE

Note cable routing and tie-wrap locations before removing cable or tie-wraps.

h. Remove tie-wraps from W2 cable and ground strap using diagonal wire cutters.

i. Remove W2 display cable (1).

B–6.3.2 REPLACE W2 DISPLAY CABLE

a. Route W2 display cable (1) along existing cable harness.

b. Remove protective cap from display J1 connector.

c. Connect W2-P2 cable connector to display J1 connector.

d. Remove protective cap from PU J4 connector.

e. Connect W2-P1 cable connector to PU J4 connector.

f. Secure W2 cable and ground strap to DU isolation assembly using tie-wraps.

g. Dress tie-wraps using diagonal wire cutters.

h. Perform Functional Check IAW paragraph B–6.1.

NOTE

Inspect cables during-and-after ammunition storage rack installation. Ensure cables are not pinched behind upper ammunition storage rack.

i. Install upper ammunition storage rack and secure with ten 9/16” bolts using a 9/16” socket with ratchet and 6” extension.

B–6.4 REMOVE/REPLACE W3 SERIAL INTERFACE ADAPTER DEVICE (SIAD)

Refer to Figure B-6.

B–6.4.1 REMOVE W3 SERIAL INTERFACE ADAPTER DEVICE (SIAD)

WARNING

Before conducting maintenance involving the removal and replacement of system components, ensure that all power to the FBCB2 system is off (including power from the vehicle). Failure to comply with warning may result in equipment damage or injury to personnel.

a. Power down AN/UYK-128(V) system IAW Operator's Manual TM 11-7010-326-10, or Pocket Guide TB 11-7010-326-10.

b. Power down SINCGARS IAW TM 11-5820-890-10-8.

NOTE

Remove ammunition from storage rack before continuing maintenance IAW TM 9-2350-261-20.

c. Access W3 SIAD mounted adjacent to PU in rear roadside corner of vehicle.

d. Disconnect W3N-P1 cable connector from W3 SIAD J1 connector.

e. Disconnect W3P-P1 cable connector from W3 SIAD J2 connector.

f. Disconnect W3 SIAD-P1 cable connector from PU J3 connector.

g. Install protective cap on PU J3 connector.

NOTE

Note cable routing and tie-wrap locations before removing cable or tie-wraps.

h. Remove tie-wraps securing W3 SIAD using diagonal wire cutters.

i. Remove W3 SIAD (4).

B–6.4.2 REPLACE W3 SERIAL INTERFACE ADAPTER DEVICE (SIAD)

a. Route W3 SIAD (4) in original mounting position, adjacent to PU in rear roadside corner of vehicle

b. Remove protective cap from PU J3 connector.

c. Connect W3 SIAD-P1 cable connector on PU J3 connector.

d. Connect W3P-P1 cable connector to W3 SIAD J2 connector.

e. Connect W3N-P1 cable connector to W3 SIAD J1 connector.

f. Secure W3 SIAD using tie-wraps.

g. Dress tie-wraps using diagonal wire cutters.

h. Perform Functional Check IAW paragraph B–6.1.

B–6.5 REMOVE/REPLACE W3P PLGR CABLE

Refer to Figure B-6.

B–6.5.1 REMOVE W3P PLGR CABLE

WARNING

Before conducting maintenance involving the removal and replacement of system components, ensure that all power to the FBCB2 system is off (including power from the vehicle). Failure to comply with warning may result in equipment damage or injury to personnel.

a. Power down AN/UYK-128(V) system IAW Operator's Manual TM 11-7010-326-10, or Pocket Guide TB 11-7010-326-10.

b. Power down SINCGARS IAW TM 11-5820-890-10-8.

NOTE

Remove ammunition from storage rack before continuing maintenance IAW TM 9-2350-261-20.

c. Disconnect W3P-P1 cable connector from W3 SIAD J2 connector.

d. Remove PLGR from mount.

e. Disconnect W3P-P2 cable connector from PLGR J2 connector using an offset flat screwdriver.

NOTE

Note cable routing and tie-wrap locations before removing cable or tie-wraps.

f. Remove tie-wraps securing W3P cable using diagonal wire cutters.

g. Remove W3P cable (3) starting at the rear of the vehicle.

B–6.5.2 REPLACE W3P PLGR CABLE

a. Route W3P cable (3) from PLGR to the rear of the vehicle.

b. Connect W3P-P2 cable connector to PLGR J2 connector using an offset flat screwdriver.

c. Install PLGR in mount.

d. Connect W3P-P1 cable connector to W3 SIAD J2 connector.

e. Secure W3P cable using tie-wraps.

f. Dress tie-wraps using diagonal wire cutters.

g. Perform Functional Check IAW paragraph B–6.1.

B–6.6 REMOVE/REPLACE W3N INC CABLE

Refer to Figure B-6.

B–6.6.1 REMOVE W3N INC CABLE

WARNING

Before conducting maintenance involving the removal and replacement of system components, ensure that all power to the FBCB2 system is off (including power from the vehicle). Failure to comply with warning may result in equipment damage or injury to personnel.

a. Power down AN/UYK-128(V) system IAW Operator's Manual TM 11-7010-326-10, or Pocket Guide TB 11-7010-326-10.

b. Power down SINCGARS IAW TM 11-5820-890-10-8.

NOTE

Remove ammunition from storage rack before continuing maintenance IAW TM 9-2350-261-20.

c. Disconnect W3N-P1 cable connector from W3 SIAD J1 connector.

d. Disconnect W3N-P2 cable connector from SINCGARS INC J6 connector.

NOTE

Note cable routing and tie-wrap locations before removing cable or tie-wraps.

e. Remove tie-wraps securing the W3N cable using diagonal cutters.

f. Remove W3N cable (5) starting at the rear of the vehicle.

B–6.6.2 REPLACE W3N INC CABLE

a. Route W3N cable (5) from the INC to the rear of the vehicle.

b. Connect W3N-P2 cable connector to SINCGARS INC J6 connector.

c. Connect W3N-P1 cable connector to W3 SIAD J1 connector.

d. Secure W3N cable using tie-wraps.

e. Dress tie-wraps using diagonal wire cutters.

f. Perform Functional Check IAW paragraph B–6.1.

B–6.7 REMOVE/REPLACE W4 AUDIO CABLE

Refer to Figure B-6.

B–6.7.1 REMOVE W4 AUDIO CABLE

WARNING

Before conducting maintenance involving the removal and replacement of system components, ensure that all power to the FBCB2 system is off (including power from the vehicle). Failure to comply with warning may result in equipment damage or injury to personnel.

a. Power down AN/UYK-128(V) system IAW Operator's Manual TM 11-7010-326-10, or Pocket Guide TB 11-7010-326-10.

b. Power down SINCGARS IAW TM 11-5820-890-10-8.

NOTE

Remove ammunition from storage rack before continuing maintenance IAW TM 9-2350-261-20.

c. Disconnect W4-P1 cable connector from PU J2 connector.

d. Install protective cap on PU J2 connector.

e. Disconnect W4-P2 cable connector from Intercom Box C-2298 connector.

f. Disconnect W4-J1 cable connector from Combat Vehicle Crew (CVC) helmet P1 connector.

NOTE

Note cable routing and tie-wrap locations before removing cable or tie-wraps.

g. Remove tie-wraps securing W4 cable using diagonal wire cutters.

h. Remove W4 cable (2) starting at the rear of the vehicle.

B–6.7.2 REPLACE W4 AUDIO CABLE

a. Route W4 cable (2) from the Intercom Box to the rear of the vehicle.

b. Connect W4-J1 cable connector to CVC helmet P1 connector.

c. Connect W4-P2 cable connector to Intercom Box C-2298 connector.

d. Remove protective cap from PU J2 connector.

e. Connect W4-P1 cable connector to PU J2 connector.

f. Secure W4 cable using tie-wraps.

g. Dress tie-wraps using diagonal wire cutters.

h. Perform the Functional Check of paragraph B–6.1.

B–6.8 CABLE ROUTING

Figure B-6 shows the relative placement of the FBCB2 components and the cable routing in the M1064 MORTAR Carrier. Due to space limitations and the long length of the cables, the cable layout in the M1064 platform is critical and must be followed as closely as possible. When removing or replacing a long cable, it is important to note the cable routing and work from one end to the other as directed in the task steps.

The M1064 cables (except SIAD) are routed behind the ammunition storage rack. The ammunition storage rack must be removed for cable access when removing and replacing the W1 power cable and W2 display cable due to the large connector size of these cables. When removing and replacing the W3N INC cable, W3P PLGR cable and W4 audio cable, the smaller connectors on these cables at the PU end will fit through the cutouts in the ammunition storage rack without removing the rack. Exercise care when routing the cables behind the ammunition storage rack to avoid excessive bending, pinching, or cutting.

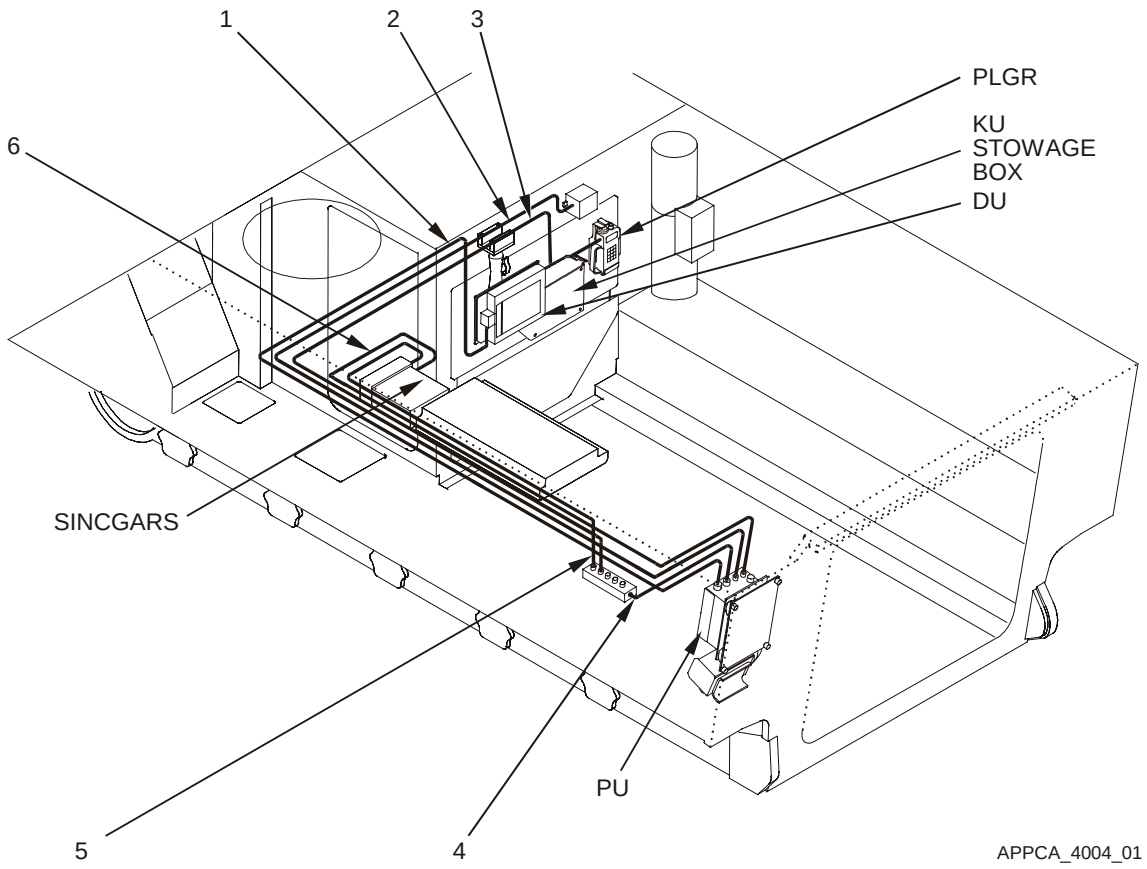

Figure B-6. Cable Run

Key and Parts List for Figure B-6

ITEM NO.	NOMENCLATURE	CAGE CODE	PART NUMBER	NSN	QTY	SMR
1	Cable Assembly W2	0J198	881327-4	5995-01-478-4880	1	PAODD
2	Cable Assembly W4	0J198	881270-3	5995-01-478-4934	1	PAODD
3	Cable Assembly W3P	0J198	881335-4	5995-01-478-4906	1	PAODD
4	Adapter Assy SIAD W3	0J198	881331-1	4920-01-478-3722	1	PAODD
5	Cable Assembly W3N	0J198	881336-4	5995-01-478-4926	1	PAODD
6	Cable Assembly W1	0J198	861880-7	5995-01-478-4963	1	PAODD
--	Strap, Tie Down, Elect	39428	7130K31		A/R	PAOZZ

B–6.9 REMOVE/REPLACE PU ISOLATION ASSEMBLY

Refer to Figure B-7.

NOTE

Ground straps are attached to components at one end (PU and DU) and a frame ground at the other end. Regardless of where the ground strap terminates, it is usually a burnished (void of paint) area. If the ground strap is removed from a burnished area make sure to return it to the same burnished area. Where applicable, always connect the ground strap first when assembling, and disconnect the ground strap last when disassembling.

B–6.9.1 REMOVE PU ISOLATION ASSEMBLY

WARNING

Before conducting maintenance involving the removal and replacement of system components, ensure that all power to the FBCB2 system is off (including power from the vehicle). Failure to comply with warning may result in equipment damage or injury to personnel.

a. Power down AN/UYK-128(V) system IAW Operator's Manual TM 11-7010-326-10, or Pocket Guide TB 11-7010-326-10.

NOTE

Do not remove the Removable Hard Disk Drive Cartridge (RHDDC) or locking bracket from PU.

b. Remove PU IAW Unit Maintenance Manual TM 11-7010-326-20&P, Chapter 2.

c. Remove PU IAW Unit Maintenance Manual, TM 11-7010-326-20&P, Chapter 2, paragraph 2.10.3.

d. Unlatch and remove fire extinguisher from mounting bracket (6) beneath the PU.

e. Remove one hex head screw (5), lock washer (4), flat washer (3) and ground strap from PU isolation assembly (1) bottom plate and weldnut (2) using a 7/16" socket with ratchet and 3" extension.

f. Remove remaining three hex head screws (5), lock washers (4) and flat washers (3) from PU isolation assembly (1) bottom plate and weldnuts (2) using a 7/16" socket with ratchet and 3" extension.

g. Remove the PU isolation assembly from the weldnuts.

B–6.9.2 REPLACE PU ISOLATION ASSEMBLY

a. Align four PU isolation assembly (1) bottom plate holes with weldnuts (2).

NOTE

To ensure positive ground, PU ground strap must make direct contact with bare metal. Ensure PU ground strap is installed in its original location at the PU isolation assembly bottom plate mounting hole. Slip the lock washer, flat washer and then the ground strap on the mounting screw before installing and tightening screw.

b. Install one hex head screw (5), lock washer (4), flat washer (3) and ground strap on PU isolation assembly (1) bottom plate and weldnut (2) using a 7/16” socket with ratchet and 3” extension.

c. Install remaining three hex head screws (5), lock washers (4) and flat washers (3) on PU isolation assembly (1) bottom plate and weldnuts (2) using a 7/16” socket with ratchet and 3” extension.

d. Replace and secure fire extinguisher in mounting bracket (6).

e. Install PU IAW Unit Maintenance Manual TM 11-7010-326-20&P, Chapter 2.

f. Perform Functional Check IAW paragraph B–6.1.

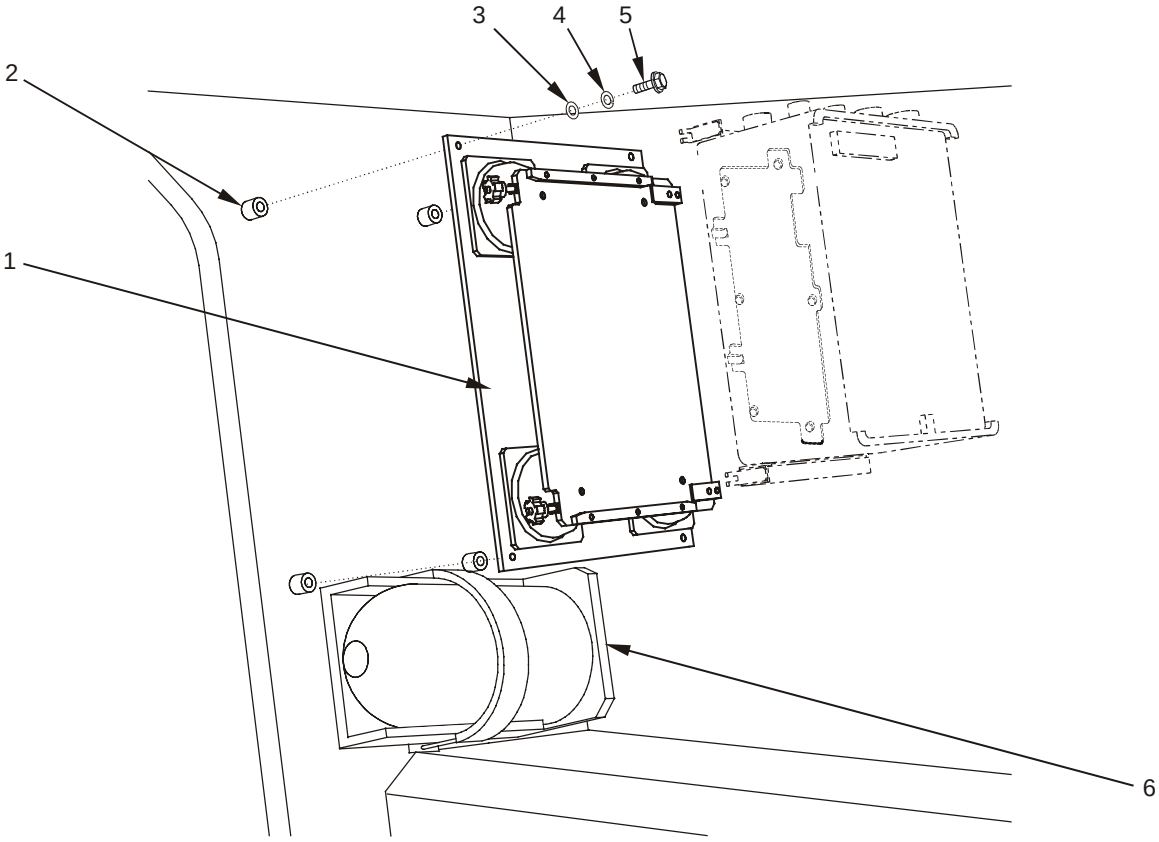

APPHA_4078_01

Figure B-7. Remove and Replace PU Isolation Assembly

Key and Parts List for Figure B-7

ITEM NO.	NOMENCLATURE	CAGE CODE	PART NUMBER	NSN	QTY	SMR
1	(PU isolation assembly) Plate, Resilient Mount PU	0J198	872826-1	5340-01-481-5742	1	PAODD
2	Weld Nut	19207	12296904-31		4	PAOZZ
3	Washer, Flat	96906	MS27183-10	5310-00-809-4058	8	PAOZZ
4	Washer, Lock	96906	MS35338-44	5310-00-582-5965	8	PAOZZ
5	Screw, Cap, Hex Head	80204	B1821AH025C088N	5305-01-389-8787	4	PAOZZ
6	Bracket, Mod Fire Ext	0J198	881273-1		1	XBOOO
--	Screw, Cap, Hex Head	80204	B1821AH025C100N	5305-01-389-7984	4	PAOZZ
--	Bracket, Mount Fire Ext	80212	4250231		1	XBOOO
--	Screw, Cap, Hex Head	80204	B1821AH038C088N	5305-01-389-9088	4	PAOZZ
--	Washer, Lock	96906	MS35333-40	5310-00-550-1130	4	PAOZZ
--	Washer, Flat	96906	MS27183-14	5310-00-080-6004	4	PAOZZ
--	Assembly, PU Lock	0J198	861865-1		1	XBOOO
--	Bracket, Locking	0J198	861871-1		1	XBOZZ
--	Screw	80205	MS35190-253	5305-00-059-4568	2	PAOZZ

B–6.10 REMOVE/REPLACE DU ISOLATION ASSEMBLY

Refer to Figure B-8.

NOTE

Ground straps are attached to components at one end (PU and DU) and a frame ground at the other end. Regardless of where the ground strap terminates, it is usually a burnished (void of paint) area. If the ground strap is removed from a burnished area make sure to return it to the same burnished area. Where applicable, always connect the ground strap first when assembling, and disconnect the ground strap last when disassembling.

B–6.10.1 REMOVE DU ISOLATION ASSEMBLY

WARNING

Before conducting maintenance involving the removal and replacement of system components, ensure that all power to the FBCB2 system is off (including power from the vehicle). Failure to comply with warning may result in equipment damage or injury to personnel.

a. Power down AN/UYK-128(V) system IAW Operator's Manual TM 11-7010-326-10, or Pocket Guide TB 11-7010-326-10.

b. Remove DU IAW Unit Maintenance Manual TM 11-7010-326-20&P, Chapter 2.

NOTE

Note cable routing and tie-wrap locations before removing cable or tie-wraps.

c. Remove tie-wraps securing W2 cable and ground strap to DU isolation assembly using diagonal wire cutters.

d. Remove one self-locking wing nut (5), safety lanyard (6), spacer (4) and square neck bolt (3) from RAM-Ball display base with ball and DU isolation assembly (2) bottom plate.

CAUTION

Ensure support is provided to display while loosening RAM-Ball knob. Failure to comply could result in display falling from RAM-Ball mount causing equipment damage.

e. Loosen RAM-Ball knob while supporting DU isolation assembly (2) until RAM-Ball display base with ball can be lifted free of RAM-Ball socket arm.

f. Remove remaining three self-locking wing nuts (5), spacers (4) and square neck bolts (3) from RAM-Ball display base with ball and DU isolation assembly (2) bottom plate.

g. Remove DU isolation assembly (2).

B–6.10.2 REPLACE DU ISOLATION ASSEMBLY

a. Align four RAM-Ball display base with ball installation holes with slots in the DU isolation assembly (2) bottom plate.

b. Install three square neck bolts (3), spacers (4) and self-locking wing nuts (5) on RAM-Ball display base with ball and DU isolation assembly (2) bottom plate.

CAUTION

Ensure RAM-Ball is free of dirt and contaminants before reassembling. Failure to comply can result in slippage or excess wear of RAM-Ball assembly.

c. Inspect and clean RAM-Ball socket arm and display base with ball, as necessary, using clean lint-free wipes.

d. Insert RAM-Ball display base with ball into RAM-Ball socket arm while supporting DU isolation assembly (2).

e. Adjust viewing angle and tighten RAM-Ball knob.

f. Install remaining square neck bolt (3), spacer (4), safety lanyard (6) and self-locking wing nut (5).

g. Secure W2 display cable and ground strap to DU isolation assembly (2) bottom plate using tie-wraps.

h. Dress tie-wraps using diagonal wire cutters.

i. Install DU IAW Unit Maintenance Manual TM 11-7010-326-20&P, Chapter 2.

j. Perform Functional Check IAW paragraph B–6.1.

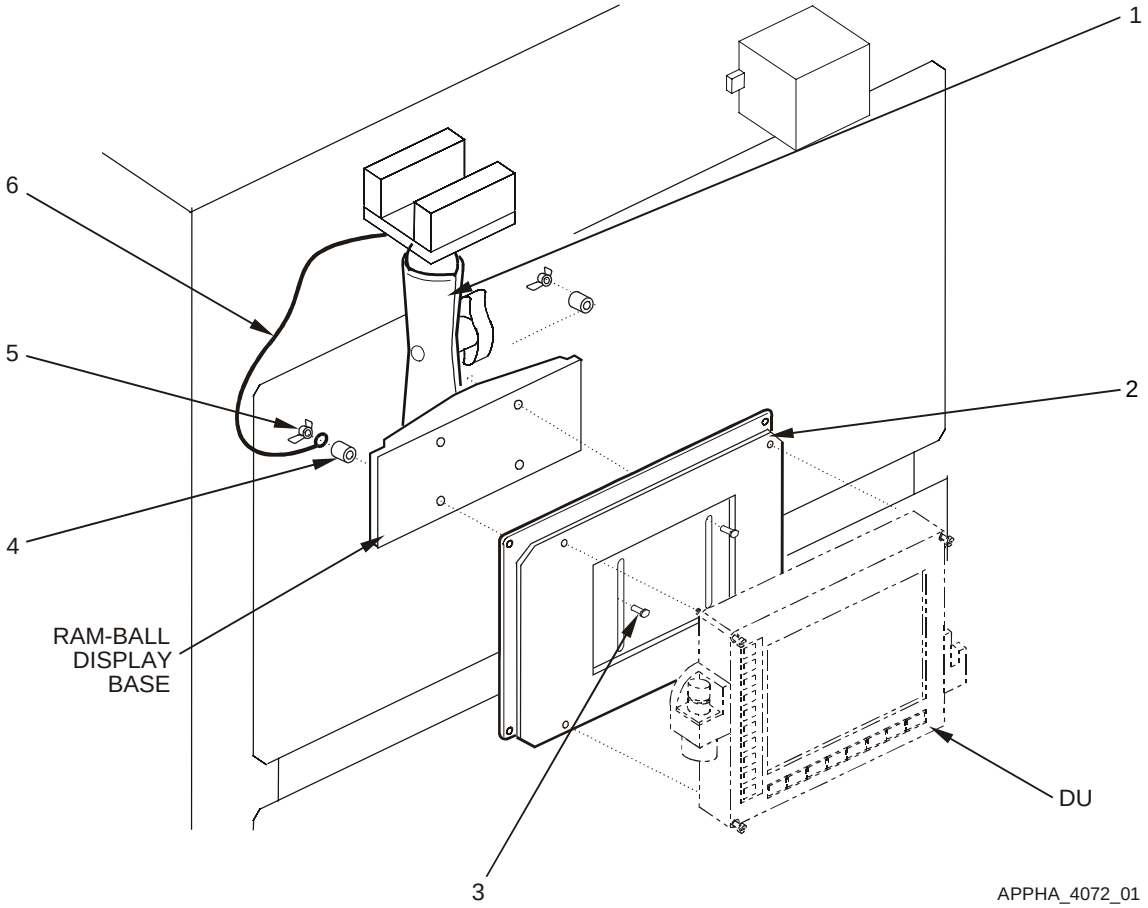

Figure B-8. Remove and Replace DU Isolation Assembly

Key and Parts List for Figure B-8

ITEM NO.	NOMENCLATURE	CAGE CODE	PART NUMBER	NSN	QTY	SMR
1	Mount, RAM-Ball	0J198	889489-1		1	PAOZZ
2	(DU isolation assembly) Plate, Resilient Mount DU	0J198	872871-1	5340-01-481-5743	1	PAODD
3	Bolt, Square Neck	96906	MS35751-17	5306-00-889-2943	4	PAOZZ
4	Spacer, Aluminum	57177	10705AL315C		4	PAOZZ
5	Nut, Self-Locking, Wing	96906	MS51553-420	5310-01-384-2546	4	PAOZZ
6	(Safety lanyard) Wire Rope Assembly	39428	30645T11		1	PAOZZ
--	Assembly, Lock DU	0J198	872843-1		1	XBOOO
--	Bracket, Locking	0J198	861871-3		1	XBOZZ
--	Washer, Lock	96906	MS35338-42	5310-00-045-3299	2	PAOZZ
--	Screw	80205	MS35190-253	5305-00-059-4568	2	PAOZZ

B–6.11 REMOVE/REPLACE RAM-BALL ASSEMBLY

Refer to Figure B-9.

NOTE

Ground straps are attached to components at one end (PU and DU) and a frame ground at the other end. Regardless of where the ground strap terminates, it is usually a burnished (void of paint) area. If the ground strap is removed from a burnished area, make sure to return it to the same burnished area. Where applicable, always connect the ground strap first when assembling, and disconnect the ground strap last when disassembling.

B–6.11.1 REMOVE RAM-BALL ASSEMBLY

WARNING

Before conducting maintenance involving the removal and replacement of system components, ensure that all power to the FBCB2 system is off (including power from the vehicle). Failure to comply with warning may result in equipment damage or injury to personnel.

a. Power down AN/UYK-128(V) system IAW Operator's Manual TM 11-7010-326-10, or Pocket Guide TB 11-7010-326-10.

b. Remove DU IAW Unit Maintenance Manual TM 11-7010-326-20&P, Chapter 2.

NOTE

Note cable routing and tie-wrap locations before removing cable or tie-wraps.

c. Remove tie-wraps securing W2 display cable and ground strap to DU isolation assembly using diagonal wire cutters.

d. Remove one self-locking wing nut (6), safety lanyard (7), spacer (5) and square neck bolt (4) from RAM-Ball display base.

CAUTION

Ensure support is provided to display while loosening RAM-Ball knob. Failure to comply could result in display falling from RAM-Ball mount causing equipment damage.

e. Loosen RAM-Ball knob while supporting DU isolation assembly until RAM-Ball display base with ball can be lifted free of RAM-Ball socket arm.

f. Remove remaining three self-locking wing nuts (6), spacers (5) and square neck bolts (4) from RAM-Ball display base with ball and DU isolation assembly bottom plate.

g. Remove RAM-Ball display base with ball from DU isolation assembly.

h. Remove RAM-Ball socket arm from RAM-Ball mounting base with ball on Display Adapter Block (8).

B–6.11.1 REMOVE RAM-BALL ASSEMBLY (Continued)

i. Remove three flat head screws (3) from RAM-Ball mounting base with ball and Display Adapter Block (8) using a No. 3 cross-tip screwdriver.

j. Remove RAM-Ball mounting base with ball from Display Adapter Block (8).

NOTE

If removing display adapter block (8) from welded display mounting block (1) on vehicle ceiling, continue with the following steps.

k. Remove four hex head screws (9), lock washers (10) and flat washers (11), including ground strap and safety lanyard, from display adapter block (8).

l. Remove display adapter block from welded mounting blocks.

B–6.11.2 REPLACE RAM-BALL ASSEMBLY

NOTE

If installing display adapter block (8) to welded display mounting block (1) on vehicle ceiling, perform steps a and b, otherwise begin with step c.

a. Align four holes in display adapter block (8) with installation holes in welded display mounting block (1) on vehicle ceiling.

b. Install four hex head screws (9), lock washers (10) and flat washers (11), including safety lanyard on display adapter block (8).

c. Align three holes in RAM-Ball mounting base with ball with Display Adapter Block (8) installation holes.

d. Install three flat head screws (3) on RAM-Ball mounting base with ball and Display Adapter Block (8) using a No. 3 cross-tip screwdriver.

CAUTION

Ensure RAM-Ball is free of dirt and contaminants before reassembling. Failure to comply can result in slippage or excess wear of RAM-Ball assembly.

e. Inspect and clean RAM-Ball socket arm, display and mounting base with ball, as necessary, using clean lint-free wipes.

f. Install RAM-Ball socket arm on RAM-Ball mounting base with ball on Display Adapter Block (8).

g. Align four RAM-Ball display base with ball installation holes with slots in DU isolation assembly bottom plate.

h. Install three square neck bolts (4), spacers (5) and self-locking wing nuts (6) on RAM-Ball display base with ball and DU isolation assembly bottom plate.

i. Insert RAM-Ball display base with ball into RAM-Ball socket arm while supporting DU isolation assembly.

j. Adjust viewing angle and tighten RAM-Ball knob.

k. Install remaining square neck bolt (4), spacer (5), safety lanyard (7) and self-locking wing nut (6) on RAM-Ball display base with ball and DU isolation assembly bottom plate.

B–6.11.2 REPLACE REM-BALL ASSEMBLY (Continued)

l. Install DU IAW Unit Maintenance Manual TM 11-7010-326-20&P, Chapter 2.

m. Secure W2 display cable and ground strap to isolation assembly using tie-wraps.

n. Dress tie-wraps using diagonal wire cutters.

o. Perform Functional Check IAW paragraph B–6.1.

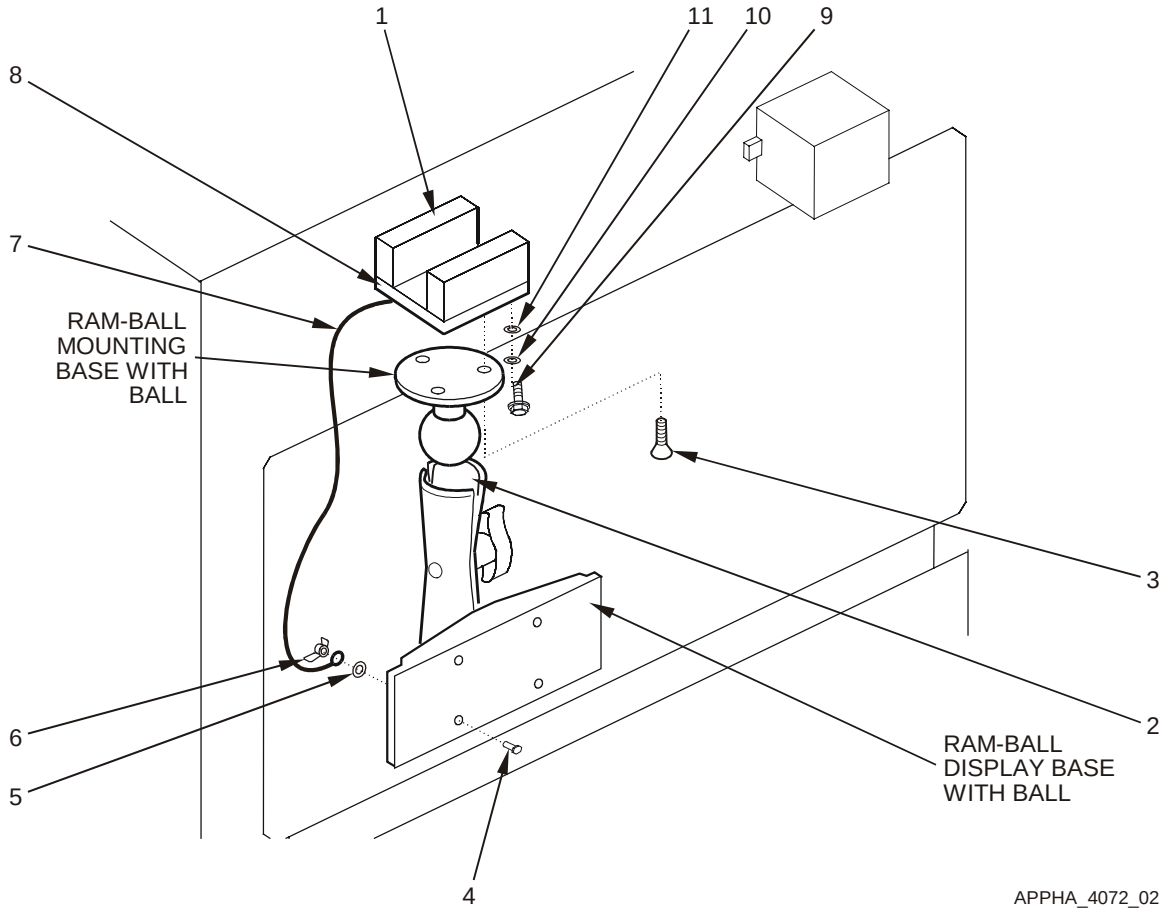

Figure B-9. Remove and Replace RAM-Ball Assembly

Key and Parts List for Figure B-9

ITEM NO.	NOMENCLATURE	CAGE CODE	PART NUMBER	NSN	QTY	SMR
1	Block, Display Mounting	80212	4250218		2	XBOZZ
2	Mount, RAM-Ball	0J198	889489-1		1	PAOZZ
3	Screw, Flat Head	80205	MS35190-289	5305-00-958-5246	3	PAOZZ
4	Bolt, Square Neck	96906	MS35751-17	5306-00-889-2943	4	PAOZZ
5	Spacer, Aluminum	57177	10705AL315C		4	PAOZZ
6	Nut, Self-Locking, Wing	96906	MS51553-420	5310-01-384-2546	4	PAOZZ
7	Wire Rope Assembly	39428	30645T11		1	PAOZZ
8	Block, Display Adapter	80212	4250169		1	XBOZZ
9	Screw, Cap Hex Head	80204	B1821AH025C150N	5305-01-466-7243	4	PAOZZ
10	Washer, Lock	96906	MS35333-40	5310-00-550-1130	4	PAOZZ
11	Washer, Flat	96906	MS27183-10	5310-00-809-4058	4	PAOZZ

B–6.12 REMOVE/REPLACE KEYBOARD UNIT (KU) STOWAGE BOX

Refer to Figure B-10.

B–6.12.1 REMOVE KEYBOARD UNIT (KU) STOWAGE BOX

a. Remove keyboard from stowage box, if stowed.

b. Loosen four KU stowage box captive screws (4) until the captive screws move freely using a No. 2 cross-tip screwdriver.

c. Remove KU stowage box (3) from bonded standoffs (1) on engine access cover.

B–6.12.2 REPLACE KEYBOARD UNIT (KU) STOWAGE BOX

a. Align four KU stowage box captive screws (4) with bonded standoffs (1) on engine access cover.

b. Tighten four captive screws (4) using a No. 2 cross-tip screwdriver.

c. Stow keyboard, if necessary.

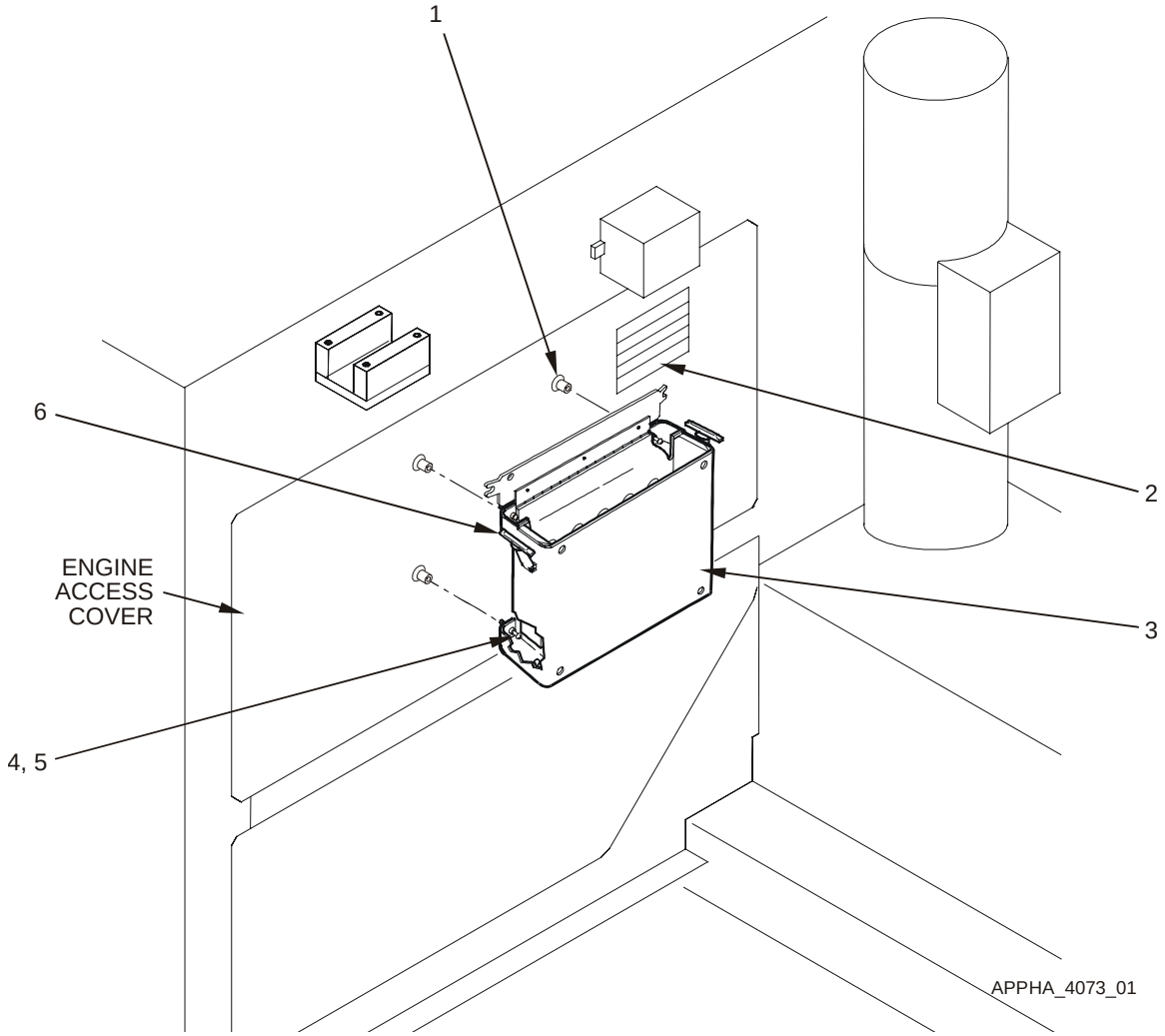

Figure B-10. Remove and Replace Keyboard Unit (KU) Stowage Box

Key and Parts List for Figure B-10

ITEM NO.	NOMENCLATURE	CAGE CODE	PART NUMBER	NSN	QTY	SMR
1	(bonded standoff) Standoff, Locking	66530	CB3001CR-3-8	5340-01-422-3953	4	PAOZZ
2	Marker, Exhaust Gas	80212	12350736	7690-01-222-7995	1	PAOZZ
3	Box, KU Stowage	0J198	872845-1	2540-01-481-5744	1	PAODD
4	Screw, Captive Panel	57177	PH207-05SS1032		4	PAOZZ
5	Retainer, Panel Screw	57177	214-03SS10-32		4	PAOZZ
6	(KU stowage box door latch) Latch, Thumb	94222	37-20-071-20	5340-01-351-3340	2	PAOZZ
--	Case, Keyboard	0J198	872845-11		1	XBOOO
--	Bottom, Stowage Box	0J198	872845-12		1	XBOOO
--	Side Rail, Keybd Box	0J198	872845-13		1	XBOOO
--	Side Rail, Keybd Box	0J198	872845-14		1	XBOOO
--	Door, Keyboard Box	0J198	872845-15		1	XBOOO
--	Hinge, Keyboard Box	0J198	872845-16		1	XBOOO
--	Strip, Rubber	0J198	872845-17		1	XBOOO
--	Rivet, Solid, Csk	96906	MS20426AD-4-5	5320-00-117-6950	6	PAOZZ
--	Label, Keyboard Box	0J198	881323-1		1	PAOZZ
--	Screw, Pan Head	96906	MS35206-229	5305-00-984-4989	14	PAOZZ
--	Washer, Flat	96906	MS27183-5	5310-00-983-8483	16	PAOZZ
--	Washer, Lock	96906	MS35338-41	5310-00-045-4007	13	PAOZZ
--	Nut, Plain	96906	MS35649-262	5310-00-934-9747	3	PAOZZ
--	Rubber Edge Trim	39428	8507K16	5325-01-435-2840	9	PAOZZ
--	Adhesive	04963	SCOTCH-GRIP RUB	8040-00-664-4318	1	PAOZZ
--	Grip, Handle Assembly	0J198	861867-1		1	XBOOO
--	Grip, Handle	0J198	861869-1		1	XBOZZ
--	Screw, Machine	96906	MS35206-228	5305-00-984-4988	4	PAOZZ
--	Washer, Lock	96906	MS35338-41	5310-00-045-4007	4	PAOZZ
--	Tape, Shielding, Elect	39428	7648A34		1	XBOZZ

B–6.13 REMOVE/REPLACE KEYBOARD UNIT (KU) STOWAGE BOX DOOR LATCHES

Refer to Figure B-11.

B–6.13.1 REMOVE KEYBOARD UNIT (KU) STOWAGE BOX DOOR LATCHES

a. Pull rubber T-handles and unfasten KU stowage box door latches, if necessary.

b. Remove two pan head screws (1), lock washers (2) and flat washers (3) from each KU stowage box door latch (4) using a No. 2 cross-tip screwdriver.

c. Remove KU stowage box door latch (4).

B–6.13.2 REPLACE KEYBOARD UNIT (KU) STOWAGE BOX DOOR LATCHES

NOTE

The same KU stowage box door latch part is used for each side of the keyboard stowage box. There is a bumper on one side of the latch that should be positioned toward the side of the keyboard stowage box when fastened.

a. Align KU stowage box door latch mounting holes with mounting holes in KU stowage box.

b. Install and tighten two pan head screws (1), lock washers (2) and flat washers (3) for each KU stowage box door latch (4), using a No. 2 cross-tip screwdriver.

c. Pull rubber T-handles and fasten KU stowage box door latches.

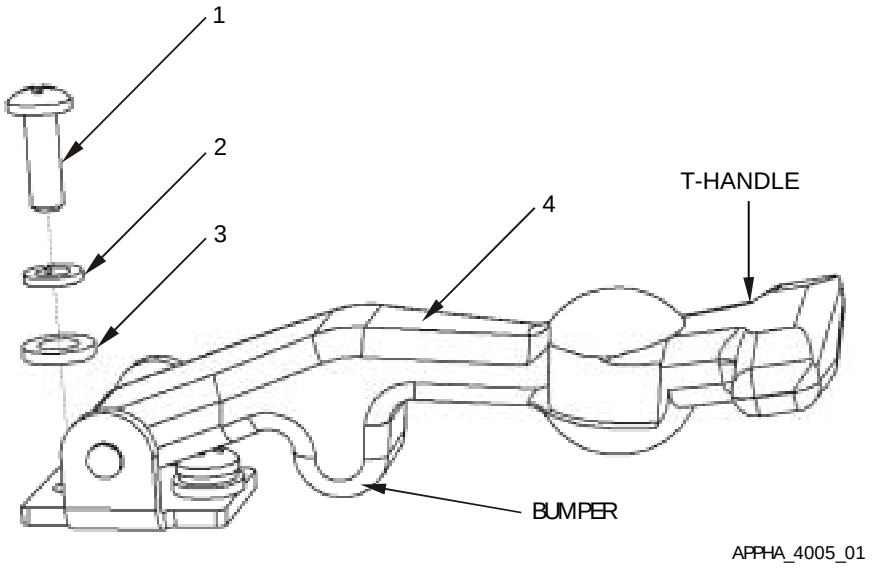

Figure B-11. Remove and Replace Keyboard Unit (KU) Stowage Box Door Latches

Key and Parts List for Figure B-11

ITEM NO.	NOMENCLATURE	CAGE CODE	PART NUMBER	NSN	QTY	SMR
1	Screw, Pan Head	96906	MS35206-229	5305-00-984-4989	4	PAOZZ
2	Washer, Lock	96906	MS35338-41	5310-00-045-4007	4	PAOZZ
3	Washer, Flat	96906	MS27183-5	5310-00-983-8483	4	PAOZZ
4	(KU stowage box door latch) Latch, Thumb	94222	37-20-071-20	5340-01-351-3340	2	PAOZZ

This page intentionally left blank.

APPENDIX C

SUPPLEMENTARY INFORMATION FOR

M981A2 FIRE SUPPORT TEAM VEHICLE (FIST-V)

TABLE OF CONTENTS

Page

C–1 GENERAL C–3
C–2 COMPONENT ITEM NUMBERS AND PART NUMBERS C–3
C–3 SYSTEM INTERFACES C–4
C–3.1 MECHANICAL C–4
C–3.2 CABLE INTERFACES C–4
C–4 COMPONENT LOCATION C–6
C–4.1 GENERAL LOCATION C–6
C–4.2 MOUNTING C–7
C–5 PLATFORM-UNIQUE TROUBLESHOOTING C–9
C–6 REMOVAL/REPLACEMENT IN THE PLATFORM C–9
C–6.1 FUNCTIONAL CHECK C–9
C–6.2 REMOVE/REPLACE W1 POWER CABLE C–10
C–6.3 REMOVE/REPLACE W2 DISPLAY CABLE C–11
C–6.4 REMOVE/REPLACE W3 SERIAL INTERFACE ADAPTER DEVICE (SIAD) C–12
C–6.5 REMOVE/REPLACE W3P PLGR CABLE C–14
C–6.6 REMOVE/REPLACE W3N INC CABLE C–15
C–6.7 REMOVE/REPLACE W4 AUDIO CABLE C–16
C–6.8 REMOVE/REPLACE PU ISOLATION ASSEMBLY C–18
C–6.9 REMOVE/REPLACE 10.4” DU ISOLATION ASSEMBLY C–21
C–6.10 REMOVE/REPLACE KEYBOARD UNIT (KU) STOWAGE BOX C–24
C–6.11 REMOVE/REPLACE KEYBOARD UNIT (KU) STOWAGE BOX DOOR LATCHES C–27

LIST OF ILLUSTRATIONS

Page
Figure C-1. Equipment Interface Block Diagram C–5
Figure C-2. Relative Component Locations C–6
Figure C-3. DU Mounting C–7
Figure C-4. PU and KU Storage Box Mounting C–8
Figure C-5. Cable Run C–17
Figure C-6. Remove and Replace PU Isolation Assembly C–20
Figure C-7. Remove and Replace DU Isolation Assembly C–23
Figure C-8. Remove and Replace Keyboard Unit (KU) Stowage Box C–25
Figure C-9. Remove and Replace Keyboard Unit (KU) Stowage Box Door Latches C–28

C–1 GENERAL

This appendix describes the interfaces between the FBCB2 equipment and the M981A2 Fire Support Team Vehicle (FIST-V). This appendix also identifies the component parts of the M981A2 platform installation kit and details the removal and replacement procedures particular to the M981A2 FIST-V.

C–2 COMPONENT ITEM NUMBERS AND PART NUMBERS

Key and Parts List tables contained in the Removal and Replacement section of this Appendix serve a dual purpose. Use the Item Numbers in the Key to identify components and attaching hardware shown in the Figures illustrating the tasks. The nomenclature and part number for the hardware and equipment mounting components of the installation kit also are keyed to the Item Numbers in the tables. Additional parts ordering information, such as Contractor and Government Entity code (CAGE); National Stock Number (NSN); quantity; and Source, Maintenance and Recoverability (SMR) codes, are provided. The Key and Parts List follow the task illustrations.

C–3 SYSTEM INTERFACES

C–3.1 MECHANICAL

The mechanical hardware-to-hardware interfaces include:

a. Cables

b. Processor Unit (PU)

c. Display Unit (DU)

d. Keyboard Unit (KU)

C–3.2 CABLE INTERFACES

Figure C-1 illustrates a block diagram of the interface between the FBCB2 equipment and the M981A2 FIST-V (Platform). Figure C-1 also illustrates the signal and control interfaces including the terminal connector labels (e.g., P1, P2). The purpose of each cable is listed below:

Cable Name	Purpose
W1–Cable	Supplies vehicle power (28 VDC) to the AN/UYK-128(V) computer and its subassemblies.
W2–Cable	Supplies power and signals to the Display Unit (DU) and Keyboard Unit (KU). Returns Man Machine Interface (MMI) information from the KU to the Processor Unit (PU).
W3–Cable	The Serial Interface Adapter Device (SIAD) is a conduit assembly that breaks out each of the serial interface ports to a connector.
W3P–Cable	Collects position and time information from the PLGR.
W3N–Cable	Provides duplex communication between the PU, Internet Controller (INC) and radios.
W4–Cable	Connects audio signals from the PU to the intercom control unit and Combat Vehicle Crew (CVC) Helmet.
W5–Cable	The Expansion Interface Adapter Device (EIAD) is connected to the Universal Serial Bus (USB) connector only when this vehicle is to be used in a Tactical Operations Center (TOC) setup. When used in this configuration, the EIAD is connected between the PU J5 connector and local router.
Ground Strap	Provides safety ground for the PU.
Ground Strap	Provides safety ground for the DU.

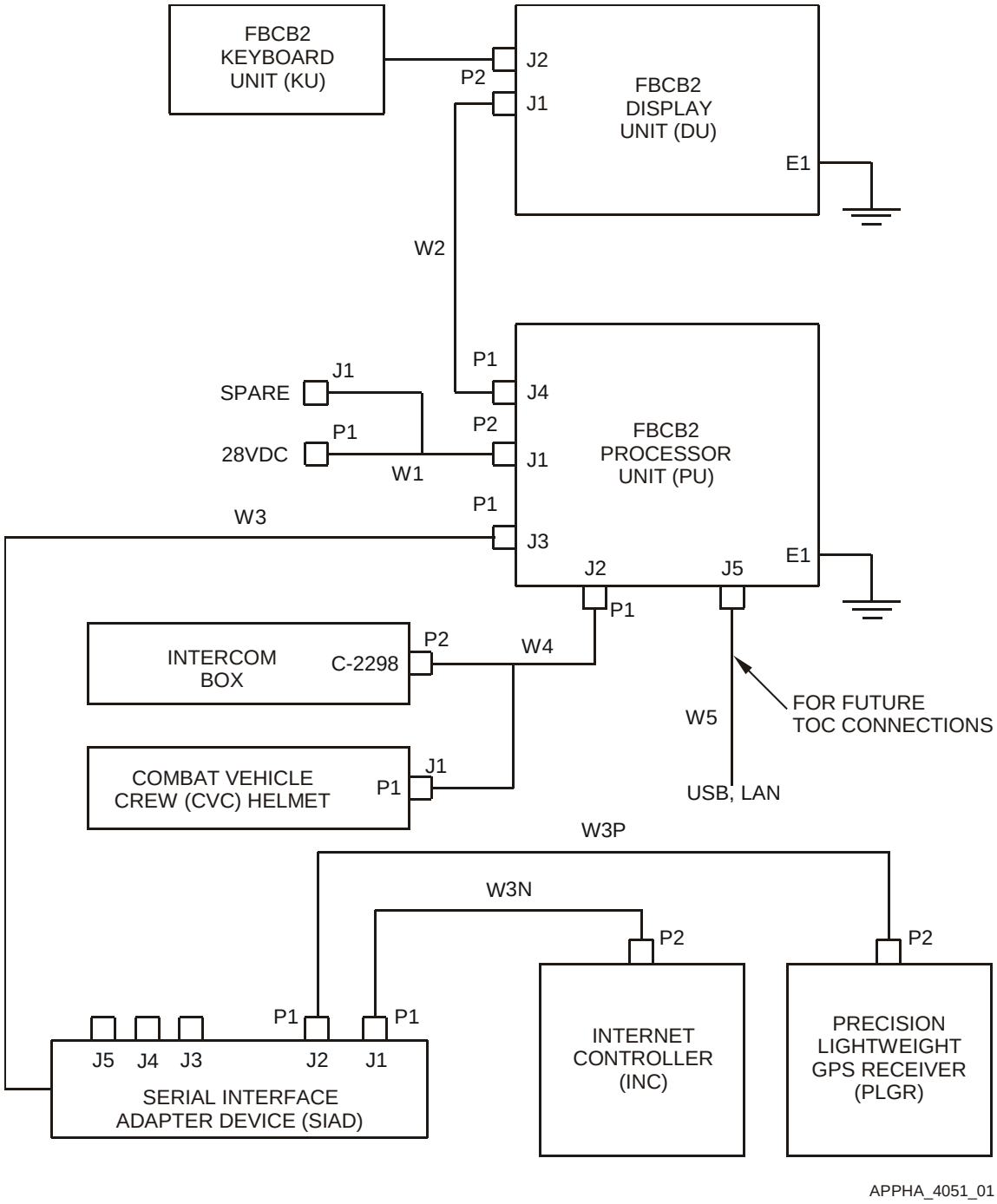

Figure C-1. Equipment Interface Block Diagram

C–4 COMPONENT LOCATION

C–4.1 GENERAL LOCATION

Figure C-2 shows the relative locations of the AN/UYK-128(V) system equipment and mounting components in the M981A2 FIST-V platform.

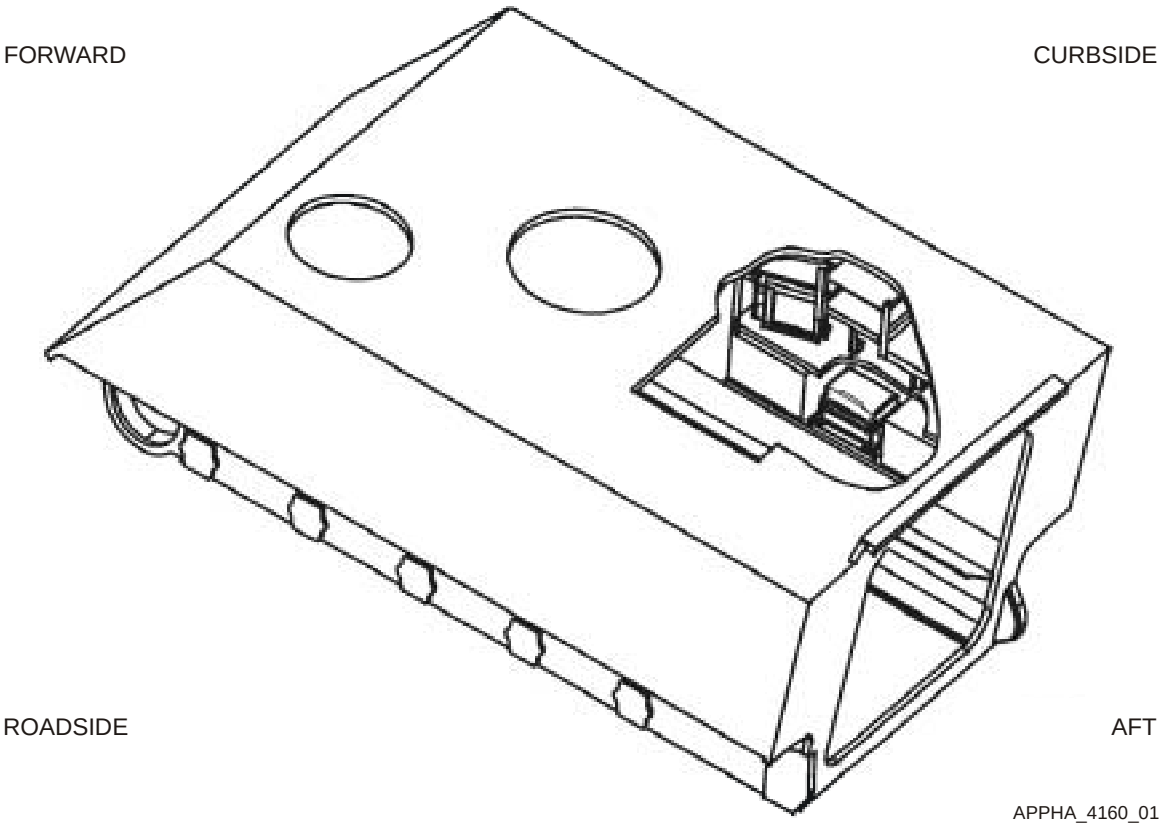

Figure C-2. Relative Component Locations

C–4.2 MOUNTING

C–4.2.1 DU MOUNTING

Figure C-3 shows the solid mounting configuration of DU and DU isolation assembly.

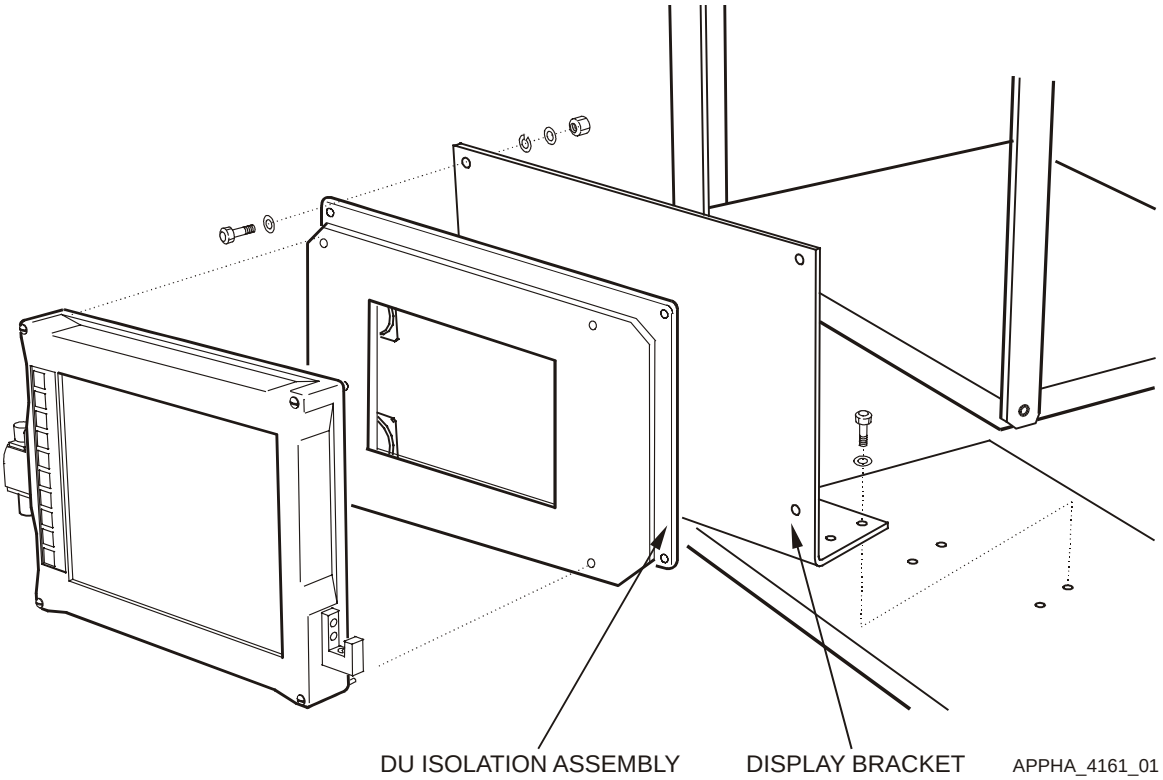

Figure C-3. DU Mounting

C–4.2.2 PU AND KU STOWAGE BOX MOUNTING

Figure C-4 illustrates the shelf-mounted configuration of the KU storage box on top of the PU.

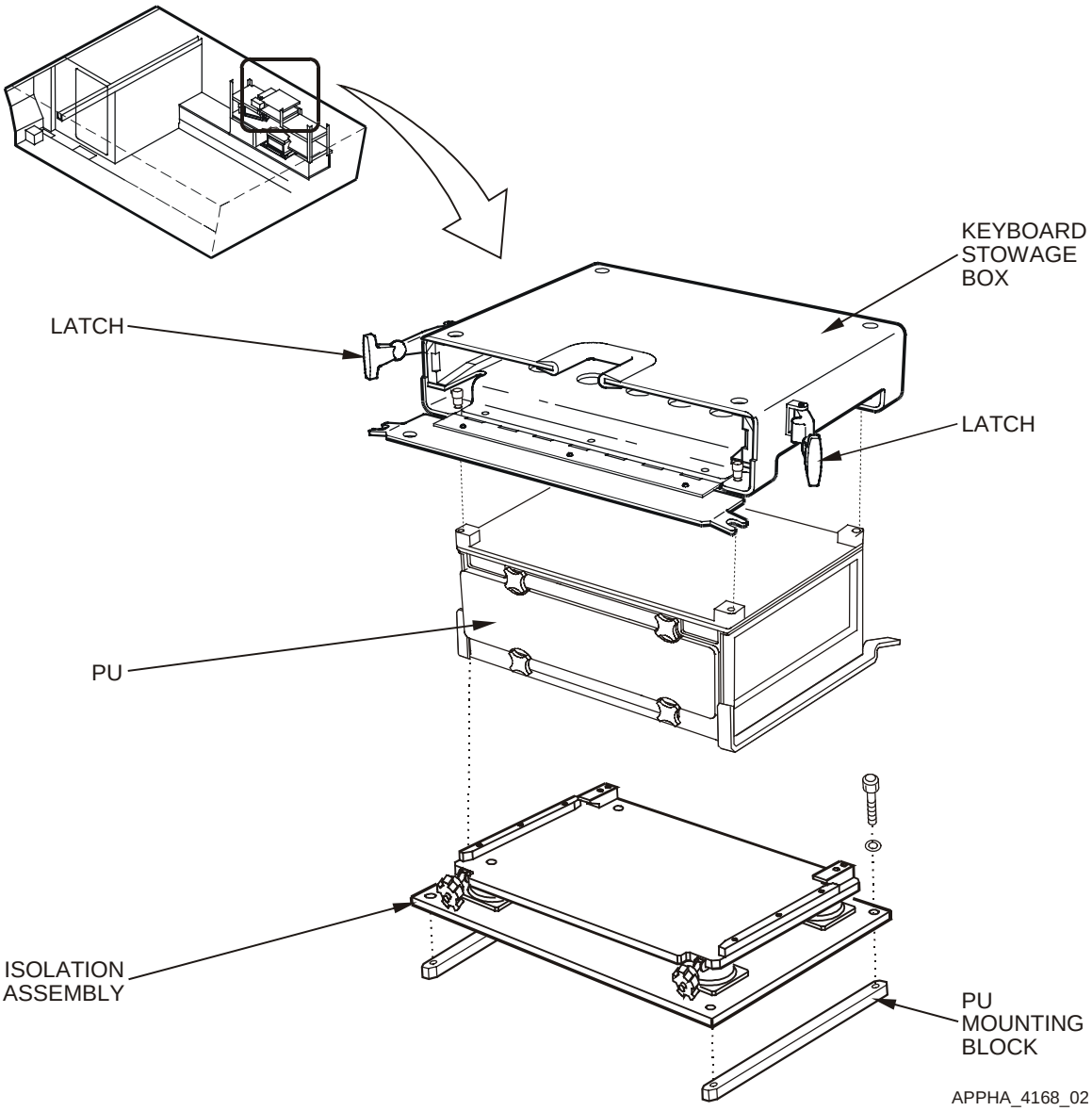

Figure C-4. PU and KU Storage Box Mounting

C–5 PLATFORM-UNIQUE TROUBLESHOOTING

The power cable connects to the vehicle utility power connector.

C–6 REMOVAL/REPLACEMENT IN THE PLATFORM

Most installations must be tailored to the platform. Cables and brackets are unique to the installation. Before a part or assembly is removed from a vehicle, fill out a “Maintenance Request” DA Form 2407. One copy of this completed form must remain with the vehicle and the remaining copies must be kept with the failed component. To prove the operability of the system after an item is replaced, perform the system Functional Check.

C–6.1 FUNCTIONAL CHECK

C–6.1.1 POWER UP

Power up and initialize all interface equipment and the AN/UYK-128(V) In Accordance With (IAW) the Operator’s Manual TM 11-7010-326-10, or Pocket Guide TB 11-7010-326-10.

C–6.1.2 VERIFICATION

NOTE

Observe that the Display Unit PWR, DISP and CPU green LED lights are lit.

a. Observe that the PLGR synchronizes with PU, indicated by the PLGR dialog box showing green.

b. Observe that the Router synchronizes with the PU, indicated by the Router dialog box showing green.

c. At the Session Manager screen, select OPS button to display the OPS screen.

d. Verify the GPS status is either green or amber on the Classification/Status Bar.

e. Verify the Communications status is either green or amber on the Classification/Status Bar.

C–6.1.3 POWER DOWN

Power down all interface equipment and the AN/UYK-128(V) IAW the Operator’s Manual TM 11-7010-326-10, or Pocket Guide TB 11-7010-326-10.

C–6.2 REMOVE/REPLACE W1 POWER CABLE

Refer to Figure C-5.

C–6.2.1 REMOVE W1 POWER CABLE

WARNING

Before conducting maintenance involving the removal and replacement of system components, ensure that all power to the FBCB2 system is off (including power from the vehicle). Failure to comply with warning may result in equipment damage or injury to personnel.

a. Power down AN/UYK-128(V) system IAW Operator's Manual TM 11-7010-326-10, or Pocket Guide TB 11-7010-326-10.

b. Disconnect W1-P1 cable connector from vehicle utility power connector on vehicle's roadside (rear).

c. Disconnect W1-J1 cable connector from (28 VDC power source) interface connector, if necessary.

d. Disconnect W1-P2 cable connector from PU J1 connector.

e. Install protective cap on PU J1 connector.

NOTE

Note cable routing and tie-wrap locations before removing cable or tie-wraps.

f. Remove tie-wraps securing W1 cable using diagonal wire cutters.

g. Remove W1 power cable (1).

C–6.2.2 REPLACE W1 POWER CABLE

a. Route W1 power cable (1) from PU behind shelf, forward and across cargo area to roadside to power utility connector (rear).

b. Remove protective cap from PU J1 connector.

c. Connect W1-P2 cable connector to PU J1 connector.

d. Connect W1-J1 cable connector to (28 VDC power source) interface connector, if necessary.

e. Connect W1-P1 cable connector to vehicle utility power connector on vehicle's roadside.

f. Secure W1 cable using tie-wraps.

g. Dress tie-wraps using diagonal wire cutters.

h. Perform Functional Check IAW paragraph C–6.1.

C–6.3 REMOVE/REPLACE W2 DISPLAY CABLE

Refer to Figure C-5.

C–6.3.1 REMOVE W2 DISPLAY CABLE

WARNING

Before conducting maintenance involving the removal and replacement of system components, ensure that all power to the FBCB2 system is off (including power from the vehicle). Failure to comply with warning may result in equipment damage or injury to personnel.

a. Power down AN/UYK-128(V) system IAW Operator's Manual TM 11-7010-326-10, or Pocket Guide TB 11-7010-326-10.

b. Disconnect W2-P1 cable connector from PU J4 connector.

c. Install protective cap on PU J4 connector.

d. Disconnect W2-P2 cable connector from display J1 connector.

e. Install protective cap on display J1 connector.

NOTE

Note cable routing and tie-wrap locations before removing cable or tie-wraps.

f. Remove tie-wraps securing W2 cable using diagonal wire cutters.

g. Remove W2 display cable (2).

C-6.3.2 REPLACE W2 DISPLAY CABLE

a. Route W2 display cable (2) behind DU and shelf to PU.

b. Remove protective cap from display J1 connector.

c. Connect W2-P2 cable connector to display J1 connector.

d. Remove protective cap from PU J4 connector.

e. Connect W2-P1 cable connector to PU J4 connector.

f. Secure W2 cable using tie-wraps.

g. Dress tie-wraps using diagonal wire cutters.

h. Perform Functional Check IAW paragraph C–6.1.

C–6.4 REMOVE/REPLACE W3 SERIAL INTERFACE ADAPTER DEVICE (SIAD)

Refer to Figure C-5.

C–6.4.1 REMOVE W3 SERIAL INTERFACE ADAPTER DEVICE (SIAD)

WARNING

Before conducting maintenance involving the removal and replacement of system components, ensure that all power to the FBCB2 system is off (including power from the vehicle). Failure to comply with warning may result in equipment damage or injury to personnel.

a. Power down AN/UYK-128(V) system IAW Operator's Manual TM 11-7010-326-10, or Pocket Guide TB 11-7010-326-10.

b. Remove PU IAW Unit Maintenance Manual TM 11-7010-326-20&P, Chapter 2.

c. Disconnect W3N-P1 INC cable connector from W3 SIAD J1 connector.

d. Disconnect W3P-P1 PLGR cable connector from W3 SIAD J2 connector.

NOTE

W3 SIAD-P1 cable connector is already disconnected from PU J3 connector due to PU removal.

NOTE

Note cable routing and tie-wrap locations before removing cable or tie-wraps.

e. Remove tie-wraps securing W3 SIAD using diagonal wire cutters.

f. Remove W3 SIAD (5).

C–6.4.2 REPLACE W3 SERIAL INTERFACE ADAPTER DEVICE (SIAD)

NOTE

Due to limited space, arrange cables parallel to curbside wall behind shelf and PU isolation assembly. Bundle cables together so as to clear W3 SIAD, PU and isolation assembly installation.

a. Route W3 SIAD (5) parallel to curbside wall behind PU isolation assembly.

b. Connect W3P-P1 PLGR cable connector to W3 SIAD J2 connector.

c. Connect W3N-P1 INC cable connector to W3 SIAD J1 connector.

NOTE

W3 SIAD-P1 cable connector is connected to PU J3 connector during PU installation.

d. Install PU IAW Unit Maintenance Manual TM 11-7010-326-20&P, Chapter 2.

e. Secure W3 SIAD using tie-wraps.

f. Dress tie-wraps using diagonal wire cutters.

g. Perform Functional Check IAW paragraph C–6.1.

C–6.5 REMOVE/REPLACE W3P PLGR CABLE

Refer to Figure C-5.

C–6.5.1 REMOVE W3P PLGR CABLE

WARNING

Before conducting maintenance involving the removal and replacement of system components, ensure that all power to the FBCB2 system is off (including power from the vehicle). Failure to comply with warning may result in equipment damage or injury to personnel.

a. Power down AN/UYK-128(V) system IAW Operator's Manual TM 11-7010-326-10, or Pocket Guide TB 11-7010-326-10.

b. Remove PU IAW Unit Maintenance Manual TM 11-7010-326-20&P, Chapter 2.

c. Disconnect W3P-P1 cable connector from W3 SIAD J2 connector.

d. Unfasten over-center latch and remove PLGR from mounting rack.

e. Disconnect W3-P2 cable connector from PLGR J2 connector using an offset flat-tip screwdriver.

NOTE

Note cable routing and tie-wrap locations before removing cable or tie-wraps.

f. Remove tie-wraps securing W3P cable using diagonal wire cutters.

g. Remove W3P cable (4).

C–6.5.2 REPLACE W3P PLGR CABLE

NOTE

Due to limited space, arrange cables parallel to curbside wall behind shelf and PU isolation assembly. Bundle cables together so as to clear W3 SIAD, PU and isolation assembly installation.

a. Route W3P cable (4) from PLGR behind shelf to W3 SIAD.

b. Connect W3P-P2 cable connector to PLGR J2 connector using an offset flat-tip screwdriver.

c. Install PLGR in mounting rack and fasten over-center latch.

d. Connect W3P-P1 cable connector to W3 SIAD J2 connector.

e. Secure W3P cable using tie-wraps.

f. Dress tie-wraps using diagonal wire cutters.

g. Install PU IAW Unit Maintenance Manual TM 11-7010-326-20&P, Chapter 2.

h. Perform Functional Check IAW paragraph C–6.1.

C–6.6 REMOVE/REPLACE W3N INC CABLE

Refer to Figure C-5.

C–6.6.1 REMOVE W3N INC CABLE

WARNING

Before conducting maintenance involving the removal and replacement of system components, ensure that all power to the FBCB2 system is off (including power from the vehicle). Failure to comply with warning may result in equipment damage or injury to personnel.

a. Power down AN/UYK-128(V) system IAW Operator's Manual TM 11-7010-326-10, or Pocket Guide TB 11-7010-326-10.

b. Remove PU IAW Unit Maintenance Manual TM 11-7010-326-20&P, Chapter 2.

c. Disconnect W3N-P1 cable connector from W3 SIAD J1 connector.

d. Disconnect W3N-P2 cable connector from SINCGARS INC A2-J6 connector.

NOTE

Note the cable routing and tie-wrap locations before removing cable or tie-wraps.

e. Remove tie-wraps securing W3N cable using diagonal cutters.

f. Remove W3N cable (6).

C–6.6.2 REPLACE W3N INC CABLE

NOTE

Due to limited space, arrange cables parallel to curbside wall behind shelf and PU isolation assembly. Bundle cables together so as to clear W3 SIAD, PU and isolation assembly installation.

a. Route W3N cable (6) from INC behind shelf to W3 SIAD.

b. Connect W3N-P2 cable connector to SINCGARS INC J6 connector.

c. Connect W3N-P1 cable connector to W3 SIAD J1 connector.

d. Secure W3N cable using tie-wraps.

e. Dress tie-wraps using diagonal wire cutters.

f. Install PU IAW Unit Maintenance Manual TM 11-7010-326-20&P, Chapter 2.

g. Perform Functional Check IAW paragraph C–6.1.

C–6.7 REMOVE/REPLACE W4 AUDIO CABLE

Refer to Figure C-5.

C–6.7.1 REMOVE W4 AUDIO CABLE

WARNING

Before conducting maintenance involving the removal and replacement of system components, ensure that all power to the FBCB2 system is off (including power from the vehicle). Failure to comply with warning may result in equipment damage or injury to personnel.

a. Power down AN/UYK-128(V) system IAW Operator's Manual TM 11-7010-326-10, or Pocket Guide TB 11-7010-326-10.

b. Disconnect W4-P1 cable connector from PU J2 connector.

c. Install protective cap on PU J2 connector.

d. Disconnect W4-P2 cable connector from Intercommunication Control Unit (INT J803) connector.

e. Disconnect W4-J1 cable connector from Combat Vehicle Crew (CVC) helmet P1 connector.

NOTE

Note cable routing and tie-wrap locations before removing cable or tie-wraps.

f. Remove tie-wraps securing W4 cable using diagonal wire cutters.

g. Remove W4 audio cable (3).

C–6.7.2 REPLACE W4 AUDIO CABLE

a. Route W4 audio cable (3) behind shelf to PU.

b. Connect W4-J1 cable connector to CVC helmet P1 connector.

c. Connect W4-P2 cable connector to Intercommunication Control Unit (INT J803) connector.

d. Remove protective cap from PU J2 connector.

e. Connect W4-P1 cable connector to PU J2 connector.

f. Secure W4 cable using tie-wraps.

g. Dress tie-wraps using diagonal wire cutters.

h. Perform Functional Check IAW paragraph C–6.1.

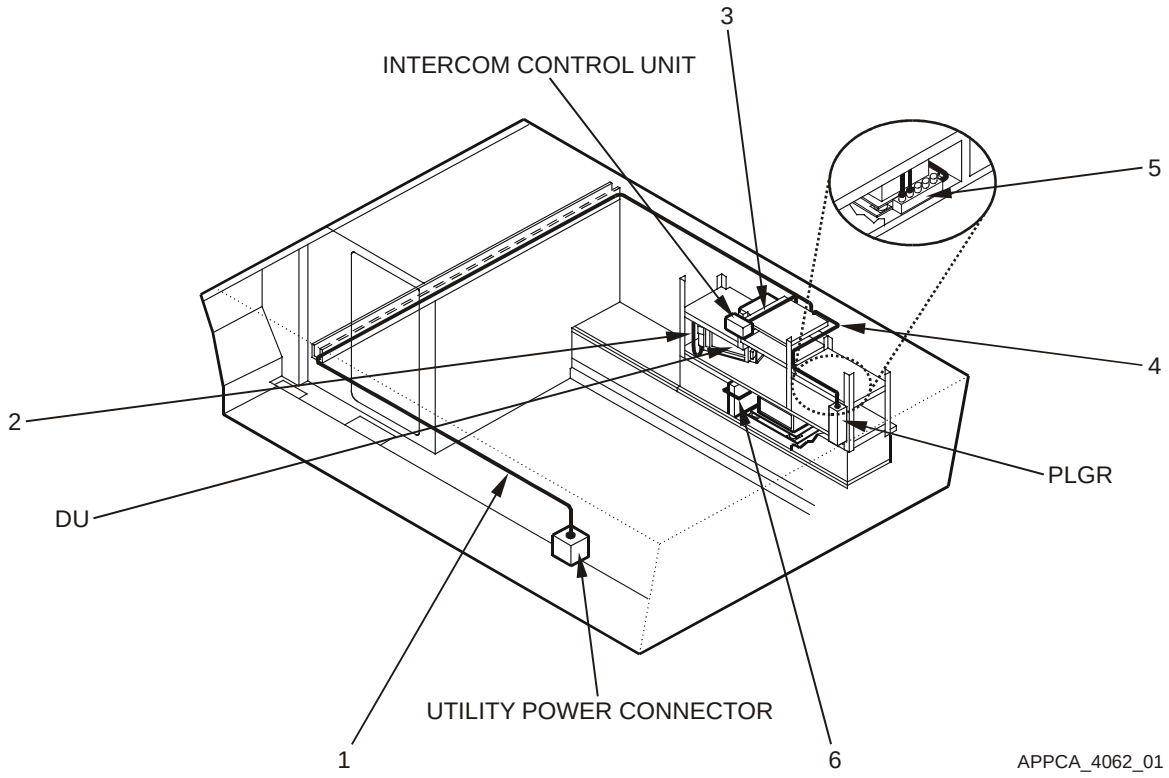

Figure C-5. Cable Run

Key and Parts List for Figure C-5

ITEM NO.	NOMENCLATURE	CAGE CODE	PART NUMBER	NSN	QTY	SMR
1	Cable Assembly W1	0J198	861882-2	5995-01-478-4892	1	PAODD
2	Cable Assembly W2	0J198	881327-2	5995-01-478-4873	1	PAODD
3	Cable Assembly W4	0J198	881270-1	5995-01-478-4924	1	PAODD
4	Cable Assembly W3P	0J198	881335-2	5995-01-478-4893	1	PAODD
5	Adapter Assy, SIAD W3	0J198	881331-1	4920-01-478-3722	1	PAODD
6	Cable Assembly W3N	0J198	881336-2	5995-01-478-4922	1	PAODD
--	Strap, Tie Down, Elect	39428	7130K31		24	PAOZZ

C–6.8 REMOVE/REPLACE PU ISOLATION ASSEMBLY

Refer to Figure C-6.

NOTE

Ground straps are attached to components at one end (PU and DU) and a frame ground at the other end. Regardless of where the ground strap terminates, it is usually a burnished (void of paint) area. If the ground strap is removed from a burnished area make sure to return it to the same burnished area. Where applicable, always connect the ground strap first when assembling, and disconnect the ground strap last when disassembling.

C–6.8.1 REMOVE PU ISOLATION ASSEMBLY

WARNING

Before conducting maintenance involving the removal and replacement of system components, ensure that all power to the FBCB2 system is off (including power from the vehicle). Failure to comply with warning may result in equipment damage or injury to personnel.

a. Power down AN/UYK-128(V) system IAW Operator's Manual TM 11-7010-326-10, or Pocket Guide TB 11-7010-326-10.

NOTE

Do not remove the Removable Hard Disk Drive Cartridge (RHDDC), locking bracket, or KU stowage box from PU.

b. Remove PU IAW Unit Maintenance Manual TM 11-7010-326-20&P, Chapter 2.

c. Remove one hex head screw (3), lock washer (4), flat washer (5) and ground strap from PU isolation assembly (1) bottom plate and welded PU mount block (2) using a 7/16" socket with ratchet and 3" extension.

d. Remove remaining three hex head screws (3), lock washers (4) and flat washers (5) from PU isolation assembly (1) bottom plate and PU mount blocks (2) using a 7/16" socket with ratchet and 3" extension.

e. Remove PU isolation assembly (1) from mount blocks.

C–6.8.2 REPLACE PU ISOLATION ASSEMBLY

NOTE

Due to limited space, arrange cables parallel to curbside wall behind shelf and PU isolation assembly. Bundle cables together so as to clear W3 SIAD, PU and isolation assembly installation.

a. Align four PU isolation assembly (1) bottom plate holes with welded PU mount block installation inserts.

NOTE

To ensure positive ground, PU ground strap must make direct contact with bare metal. Ensure PU ground strap is installed in its original location at the PU isolation assembly bottom plate mounting hole. Slip the lock washer, flat washer and ground strap on the mounting screw before installing and tightening screw.

b. Install one hex head screw (3), lock washer (4), flat washer (5) and ground strap on PU isolation assembly (1) bottom plate and PU mount block (2) using a 7/16" socket with ratchet and 3" extension.

c. Install remaining three hex head screws (3), lock washers (4) and flat washers (5) in PU isolation assembly (1) bottom plate and PU mount blocks using a 7/16" socket with ratchet and 3" extension.

d. Replace PU IAW Unit Maintenance Manual TM 11-7010-326-20&P, Chapter 2.

e. Perform Functional Check IAW paragraph C–6.1.

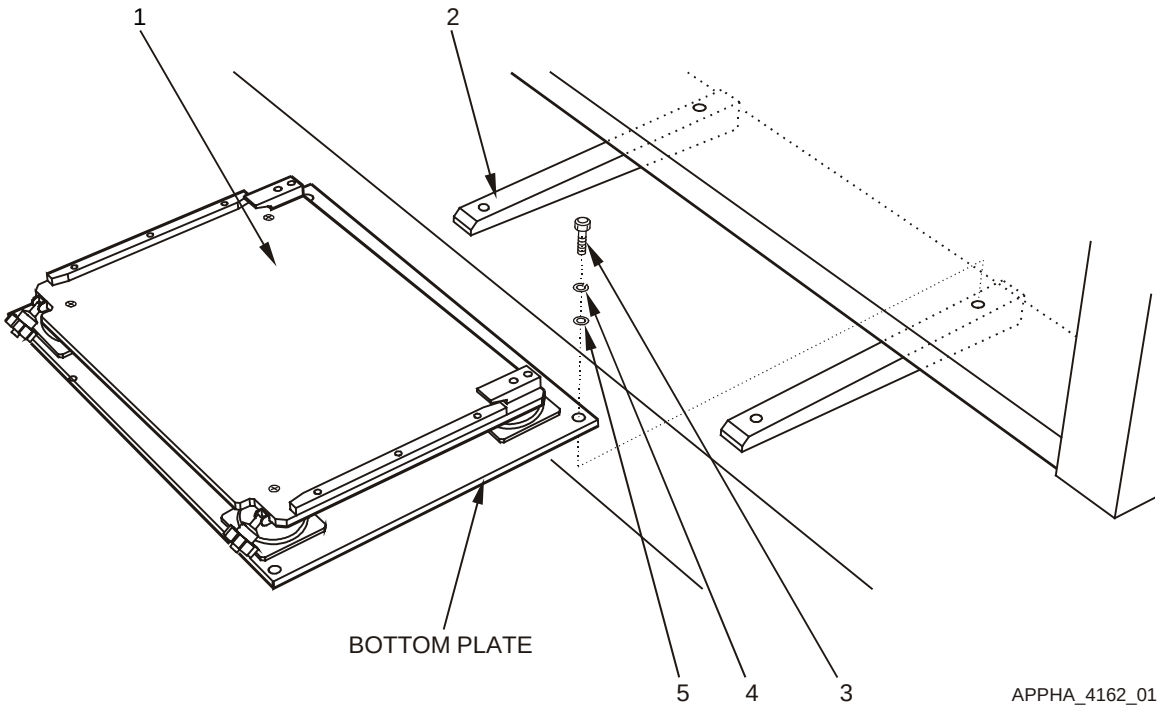

Figure C-6. Remove and Replace PU Isolation Assembly

Key and Parts List for Figure C-6

ITEM NO.	NOMENCLATURE	CAGE CODE	PART NUMBER	NSN	QTY	SMR
1	(PU Isolation Assembly) Plate, Resilient Mount PU	0J198	872826-1	5340-01-481-5742	1	PAODD
2	Block, PU Mounting	80212	4250173		2	XBOZZ
3	Screw, Cap, Hexagon	80204	B1821AH025C075N	5305-01-389-8000	4	PAOZZ
4	Washer, Lock	96906	MS35338-44	5310-00-582-5965	18	PAOZZ
5	Washer, Flat	96906	MS27183-52	5310-01-274-3255	28	PAOZZ
--	Assembly, PU Lock	0J198	861865-1		1	XBOOO
--	Bracket, Locking	0J198	861871-1		1	XBOZZ
--	Screw	80205	MS35190-253	5305-00-059-4568	2	PAOZZ

C–6.9 REMOVE/REPLACE 10.4” DU ISOLATION ASSEMBLY

Refer to Figure C-7.

NOTE

Ground straps are attached to components at one end (PU and DU) and a frame ground at the other end. Regardless of where the ground strap terminates, it is usually a burnished (void of paint) area. If the ground strap is removed from a burnished area make sure to return it to the same burnished area. Where applicable, always connect the ground strap first when assembling, and disconnect the ground strap last when disassembling.

C–6.9.1 REMOVE 10.4” DU ISOLATION ASSEMBLY

WARNING

Before conducting maintenance involving the removal and replacement of system components, ensure that all power to the FBCB2 system is off (including power from the vehicle). Failure to comply with warning may result in equipment damage or injury to personnel.

a. Power down AN/UYK-128(V) system IAW Operator’s Manual TM 11-7010-326-10, or Pocket Guide TB 11-7010-326-10.

b. Remove DU IAW Unit Maintenance Manual TM 11-7010-326-20&P, Chapter 2.

NOTE

Note cable routing and tie-wrap locations before removing cable or tie-wraps.

c. Remove tie-wraps securing W2 display cable and ground strap to DU isolation assembly using diagonal wire cutters.

d. Remove four hex head screws (2), flat washers (3), lock washers (4) and hex nuts (5) from DU isolation assembly (1) bottom plate and display bracket (6) using a 7/16” socket with ratchet and a 7/16” open-end wrench.

e. Remove DU isolation assembly (1) from display bracket (6).

C–6.9.2 REPLACE 10.4” DU ISOLATION ASSEMBLY

a. Align four holes in DU isolation assembly (1) bottom plate with display bracket (6) installation holes.

b. Install four hex head screws (2), flat washers (3), lock washers (4) and hex nuts (5) in DU isolation assembly (1) bottom plate and display bracket (6) using a 7/16” socket with ratchet and a 7/16” open-end wrench.

c. Secure W2 display cable and ground strap to DU isolation assembly (1) bottom plate using tie-wraps.

d. Dress tie-wrap using diagonal wire cutters.

e. Install DU IAW Unit Maintenance Manual TM 11-7010-326-20&P, Chapter 2.

f. Perform Functional Check IAW paragraph C–6.1.

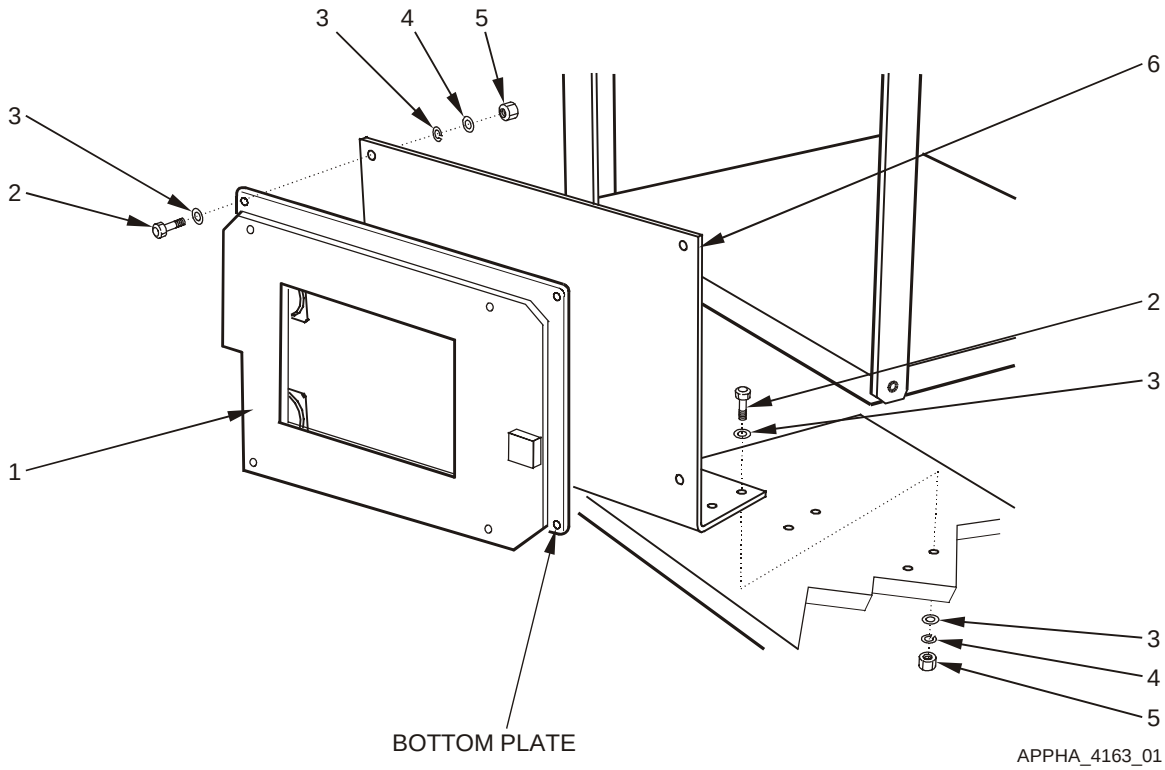

Figure C-7. Remove and Replace DU Isolation Assembly

Key and Parts List for Figure C-7

ITEM NO.	NOMENCLATURE	CAGE CODE	PART NUMBER	NSN	QTY	SMR
1	(DU Isolation Assembly) Plate, Resilient Mount DU	0J198	872870-1		1	PAODD
2	Screw, Cap, Hexagon	80204	B1821AH025C100N	5305-01-389-7984	10	PAOZZ
3	Washer, Flat	96906	MS27183-52	5310-01-274-3255	28	PAOZZ
4	Washer, Lock	96906	MS35338-44	5310-00-582-5965	18	PAOZZ
5	Nut, Plain, Hexagon	10110	MS51967-2	5310-01-291-3389	14	PAOZZ
6	Bracket, Display	80212	4250113		1	XBOZZ
--	Assembly, DU Lock	0J198	872843-1		1	XBOOO
--	Bracket, Locking	0J198	861871-3		1	XBOZZ
--	Screw	80205	MS35190-253	5305-00-059-4568	2	PAOZZ
--	Washer, Lock	96906	MS35338-42	5310-00-045-3299	2	PAOZZ

C–6.10 REMOVE/REPLACE KEYBOARD UNIT (KU) STOWAGE BOX

Refer to Figure C-8.

C–6.10.1 REMOVE KEYBOARD UNIT (KU) STOWAGE BOX

WARNING

Before conducting maintenance involving the removal and replacement of system components, ensure that all power to the FBCB2 system is off (including power from the vehicle). Failure to comply with warning may result in equipment damage or injury to personnel.

a. Power down AN/UYK-128(V) system IAW Operator's Manual TM 11-7010-326-10, or Pocket Guide TB 11-7010-326-10.

b. Remove keyboard from stowage box, if stowed.

NOTE

Do not remove the Removable Hard Disk Drive Cartridge (RHDDC) or locking bracket from PU.

c. Remove PU IAW Unit Maintenance Manual TM 11-7010-326-20&P, Chapter 2.

d. Loosen four KU stowage box captive screws (2) until the captive screws move freely using a No. 2 cross-tip screwdriver.

e. Remove KU stowage box (1) from PU.

C–6.10.2 REPLACE KEYBOARD UNIT (KU) STOWAGE BOX

a. Align four KU stowage box (1) captive screws (2) with PU installation holes.

b. Tighten four captive screws (2) using a No. 2 cross-tip screwdriver.

NOTE

Due to limited space, arrange cables parallel to curbside wall behind shelf and PU isolation assembly. Bundle cables together so as to clear W3 SIAD, PU and isolation assembly installation.

c. Install PU IAW Unit Maintenance Manual TM 11-7010-326-20&P, Chapter 2.

d. Perform Functional Check IAW paragraph C–6.1.

e. Stow keyboard, if necessary.

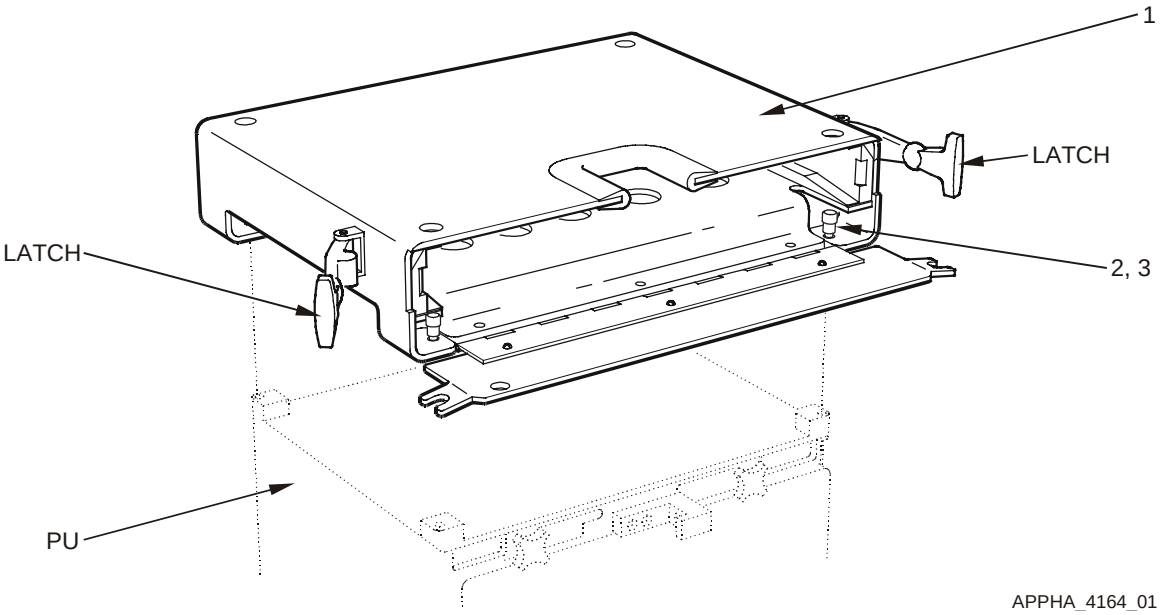

Figure C-8. Remove and Replace Keyboard Unit (KU) Stowage Box

Key and Parts List for Figure C-8

ITEM NO.	NOMENCLATURE	CAGE CODE	PART NUMBER	NSN	QTY	SMR
1	Box, KU Stowage	0J198	872845-1	2540-01-481-5744	1	PAODD
2	Screw, Captive Panel	57177	PH207-05SS1032		4	PAOZZ
3	Retainer, Panel Screw	57177	214-03SS10-32		4	PAOZZ
--	Case, Keyboard	0J198	872845-11		1	XBOOO
--	Bottom, Stowage Box	0J198	872845-12		1	XBOOO
--	Side Rail, Keybrd Box	0J198	872845-13		1	XBOOO
--	Side Rail, Keybrd Box	0J198	872845-14		1	XBOOO
--	Door, Keyboard Box	0J198	872845-15		1	XBOOO
--	Hinge, Keyboard Box	0J198	872845-16		1	XBOOO
--	Strip, Rubber	0J198	872845-17		1	XBOOO
--	Rivet, Solid, Csk	96906	MS20426AD-4-5	5320-00-117-6950	6	PAOZZ
--	Label, Keyboard Box	0J198	881323-1		1	PAOZZ
--	Screw, Pan Head	96906	MS35206-229	5305-00-984-4989	14	PAOZZ
--	Washer, Flat	96906	MS27183-5	5310-00-983-8483	16	PAOZZ
--	Washer, Lock	96906	MS35338-41	5310-00-045-4007	13	PAOZZ
--	Nut, Plain	96906	MS35649-262	5310-00-934-9747	3	PAOZZ
--	Latch, Thumb	94222	37-20-071-20	5340-01-351-3340	2	PAOZZ
--	Rubber Edge Trim	39428	8507K16	5325-01-435-2840	9	PAOZZ
--	Adhesive	04963	SCOTCH-GRIP RUB	8040-00-664-4318	1	PAOZZ
--	Grip, Handle Assembly	0J198	861867-1		1	XBOOO
--	Grip, Handle	0J198	861869-1		1	XBOZZ
--	Screw, Machine	96906	MS35206-228	5305-00-984-4988	4	PAOZZ
--	Washer, Lock	96906	MS35338-41	5310-00-045-4007	4	PAOZZ
--	Tape, Shielding, Elect	39428	7648A34		1	XBOZZ

C–6.11 REMOVE/REPLACE KEYBOARD UNIT (KU) STOWAGE BOX DOOR LATCHES

Refer to Figure C-9.

C–6.11.1 REMOVE KEYBOARD UNIT (KU) STOWAGE BOX DOOR LATCHES

WARNING

Before conducting maintenance involving the removal and replacement of system components, ensure that all power to the FBCB2 system is off (including power from the vehicle). Failure to comply with warning may result in equipment damage or injury to personnel.

a. Power down AN/UYK-128(V) system IAW Operator's Manual TM 11-7010-326-10, or Pocket Guide TB 11-7010-326-10.

b. Remove keyboard from stowage box, if stowed.

NOTE

To allow access to keyboard stowage box door latches, slide PU forward and slightly sideways.

c. Unfasten front retainers on PU IAW Unit Maintenance Manual TM 11-7010-326-20&P, Chapter 2.

d. Slide PU forward and slightly sideways to access left and right stowage box door latch screws.

e. Pull rubber T-handles and unfasten KU stowage box door latches, if necessary.

f. Remove two pan head screws (1), lock washers (2) and flat washers (3) from each KU stowage box door latch (4) using a No. 2 cross-tip screwdriver.

g. Remove KU stowage box door latch (4).

C–6.11.2 REPLACE KEYBOARD UNIT (KU) STOWAGE BOX DOOR LATCHES

NOTE

The same KU stowage box door latch part is used for each side of the keyboard stowage box. Position bumper on one side of the latch so that it is toward the side of the keyboard stowage box when fastened.

a. Align KU stowage box door latch mounting holes with installation holes in KU stowage box.

b. Install and tighten two pan head screws (1), lock washers (2) and flat washers (3) for each KU stowage box door latch (4), using a No. 2 cross-tip screwdriver.

c. Pull rubber T-handles and fasten KU stowage box door latches.

d. Slide PU on guides back into position against rear retainers.

e. Fasten front sleeves on hooks and tighten front retainers IAW Unit Maintenance Manual TM 11-7010-326-20&P, Chapter 2.

f. Stow keyboard, as required.

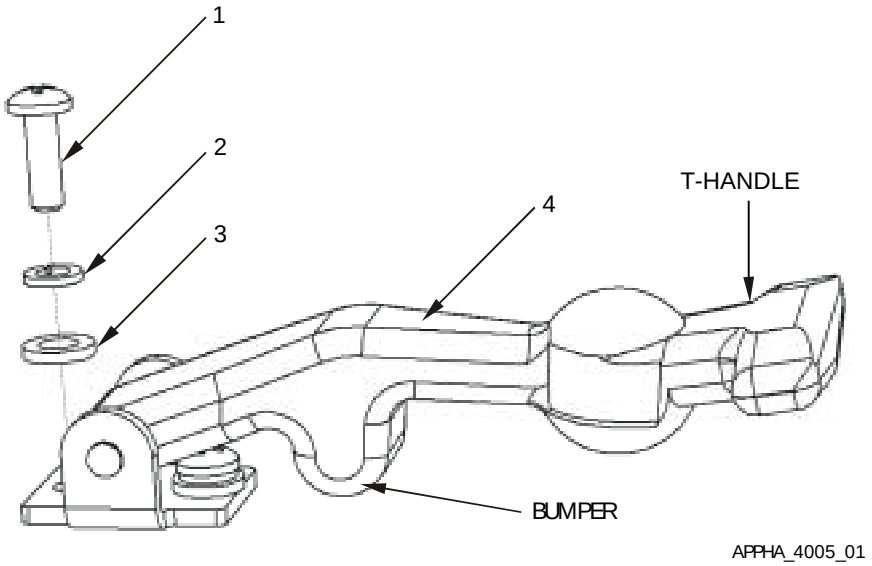

Figure C-9. Remove and Replace Keyboard Unit (KU) Stowage Box Door Latches

Key and Parts List for Figure C-9

ITEM NO.	NOMENCLATURE	CAGE CODE	PART NUMBER	NSN	QTY	SMR
1	Screw, Pan Head	96906	MS35206-229	5305-00-984-4989	4	PAOZZ
2	Washer, Lock	96906	MS35338-41	5310-00-045-4007	4	PAOZZ
3	Washer, Flat	96906	MS27183-5	5310-00-983-8483	4	PAOZZ
4	(KU stowage box door latch) Latch, Thumb	94222	37-20-071-20	5340-01-351-3340	2	PAOZZ

APPENDIX D

SUPPLEMENTARY INFORMATION FOR

M9 ACE (DOZER)

TABLE OF CONTENTS

Page
D–1 GENERAL D–3
D–2 COMPONENT ITEM NUMBERS AND PART NUMBERS D–3
D–3 SYSTEM INTERFACES D–3
D–3.1 MECHANICAL D–3
D–3.2 CABLE INTERFACES D–4
D–4 COMPONENT LOCATION D–6
D–4.1 GENERAL LOCATION D–6
D–4.2 MOUNTING D–7
D–5 PLATFORM-UNIQUE TROUBLESHOOTING D–9
D–6 REMOVAL/REPLACEMENT IN THE PLATFORM D–9
D–6.1 FUNCTIONAL CHECK D–9
D–6.2 REMOVE/REPLACE W1 POWER CABLE D–10
D–6.3 REMOVE/REPLACE W2 DISPLAY CABLE D–11
D–6.4 REMOVE/REPLACE W3 SERIAL INTERFACE ADAPTER DEVICE (SIAD) D–12
D–6.5 REMOVE/REPLACE W3P PLGR CABLE D–13
D–6.6 REMOVE/REPLACE W3N INC CABLE D–14
D–6.7 REMOVE/REPLACE W4 AUDIO CABLE D–15
D–6.8 REMOVE/REPLACE PU ISOLATION ASSEMBLY D–17
D–6.9 REMOVE/REPLACE PU MOUNTING BRACKET D–20
D–6.10 REMOVE/REPLACE DU ISOLATION ASSEMBLY D–22
D–6.11 REMOVE/REPLACE DU MOUNT ASSEMBLY AND LINKAGE D–24
D–6.12 REMOVE/REPLACE KEYBOARD UNIT (KU) STOWAGE BOX D–31
D–6.13 REMOVE/REPLACE KEYBOARD STOWAGE BOX FASTENER TAPE D–32

LIST OF ILLUSTRATIONS

Page
Figure D-1. Equipment Interface Block Diagram D–5
Figure D-2. Relative Component Locations D–6
Figure D-3. Mounting View Rearward D–7
Figure D-4. KU Stowage Box Mounting D–8
Figure D-5. Cable Run D–16
Figure D-6. Remove and Replace PU Isolation Assembly D–19
Figure D-7. Remove and Replace PU Mounting Bracket D–21
Figure D-8. Remove and Replace DU Isolation Assembly D–23
Figure D-9. Remove and Replace DU Mount Assembly and Linkage D–26
Figure D-10. Left and Right Side Linkage D–28
Figure D-11. Detail Linkage Hardware D–30
Figure D-12. Remove and Replace Keyboard Stowage Box D–33

D–1 GENERAL

This appendix describes the interfaces between the FBCB2 equipment and the M9 ACE (Dozer). This appendix also identifies the component parts of the M9 ACE platform installation kit and details the removal and replacement procedures particular to the M9 ACE.

D–2 COMPONENT ITEM NUMBERS AND PART NUMBERS

Key and Parts List tables contained in the Removal and Replacement section of this Appendix serve a dual purpose. Use the Item Numbers in the Key to identify components and attaching hardware shown in the Figures illustrating the tasks. The nomenclature and part number for the hardware and equipment mounting components of the installation kit also are keyed to the Item Numbers in the tables. Additional parts ordering information, such as Contractor and Government Entity code (CAGE); National Stock Number (NSN); quantity; and Source, Maintenance, and Recoverability (SMR) codes, is provided. The Key and Parts List follows the task illustrations.

D–3 SYSTEM INTERFACES

D–3.1 MECHANICAL

The mechanical hardware-to-hardware interfaces include:

a. Cables

b. Processor Unit (PU)

c. Display Unit (DU)

d. Keyboard Unit (KU)

D–3.2 CABLE INTERFACES

Figure D-1 illustrates a block diagram of the interface between FBCB2 equipment and the M9 ACE (Platform). Figure D-1 also illustrates the signal and control interfaces along with the terminal connector labels (e.g., P1, P2). The purpose of each cable is listed below:

Cable Name	Purpose
W1–Cable	Supplies vehicle power (28 VDC) to the AN/UYK-128(V) computer and its subassemblies.
W2–Cable	Supplies power and signals to the Display Unit (DU) and Keyboard Unit (KU). Returns Man Machine Interface (MMI) information from the KU to the Processor Unit (PU).
W3–Cable	The Serial Interface Adapter Device (SIAD) is a conduit assembly that breaks out each of the serial interface ports to a connector.
W3P–Cable	Collects position and time information from the PLGR.
W3N–Cable	Provides duplex communication between the PU, Internet Controller (INC) and radios.
W4–Cable	Connects audio signals from the PU to the Intercom system and Combat Vehicle Crew (CVC) Helmet.
W5–Cable	The Expansion Interface Adapter Device (EIAD) is connected to the Universal Serial Bus (USB) connector only when this vehicle is to be used in a Tactical Operations Center (TOC) setup. When used in this configuration, the EIAD is connected between the PU J5 connector and local router.
Ground Strap	Provides safety ground for the PU.
Ground Strap	Provides safety ground for the DU.

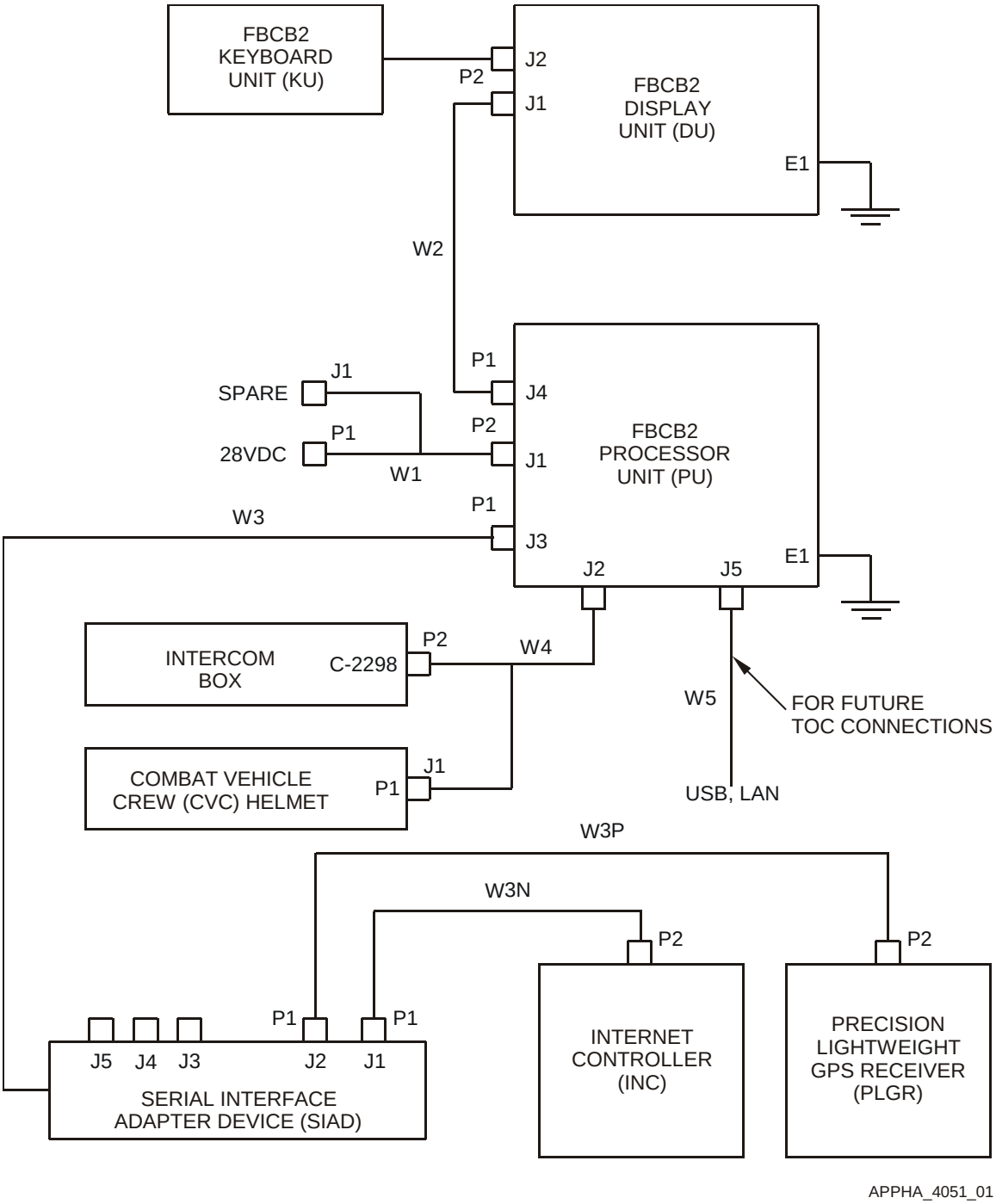

Figure D-1. Equipment Interface Block Diagram

D–4 COMPONENT LOCATION

D–4.1 GENERAL LOCATION

Figure D-2 shows the relative locations of the FBCB2 computer equipment and mounting components in the M9 ACE platform.

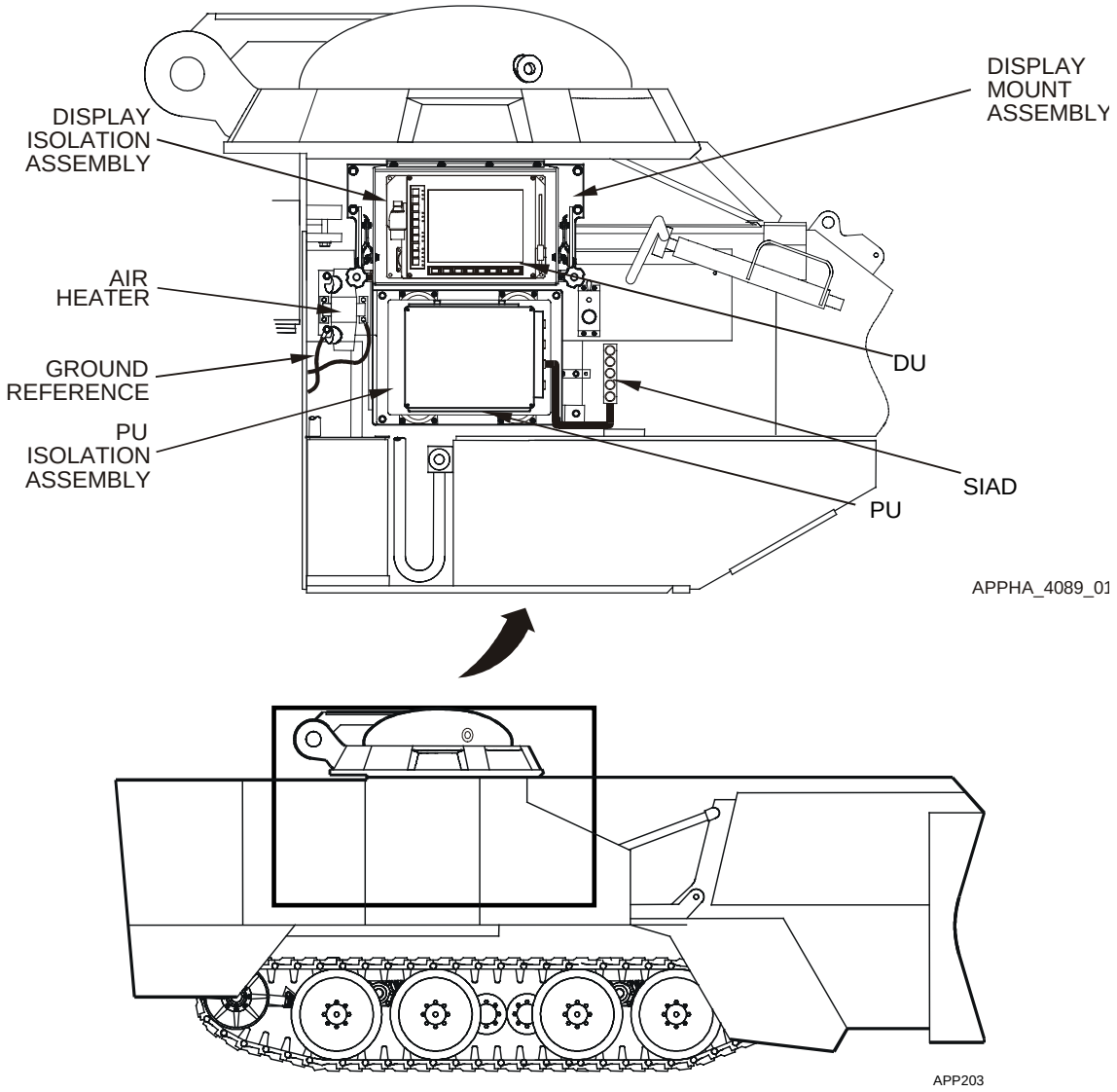

Figure D-2. Relative Component Locations

D–4.2 MOUNTING

Figure D-3 illustrates equipment mounting looking toward the back of the vehicle.

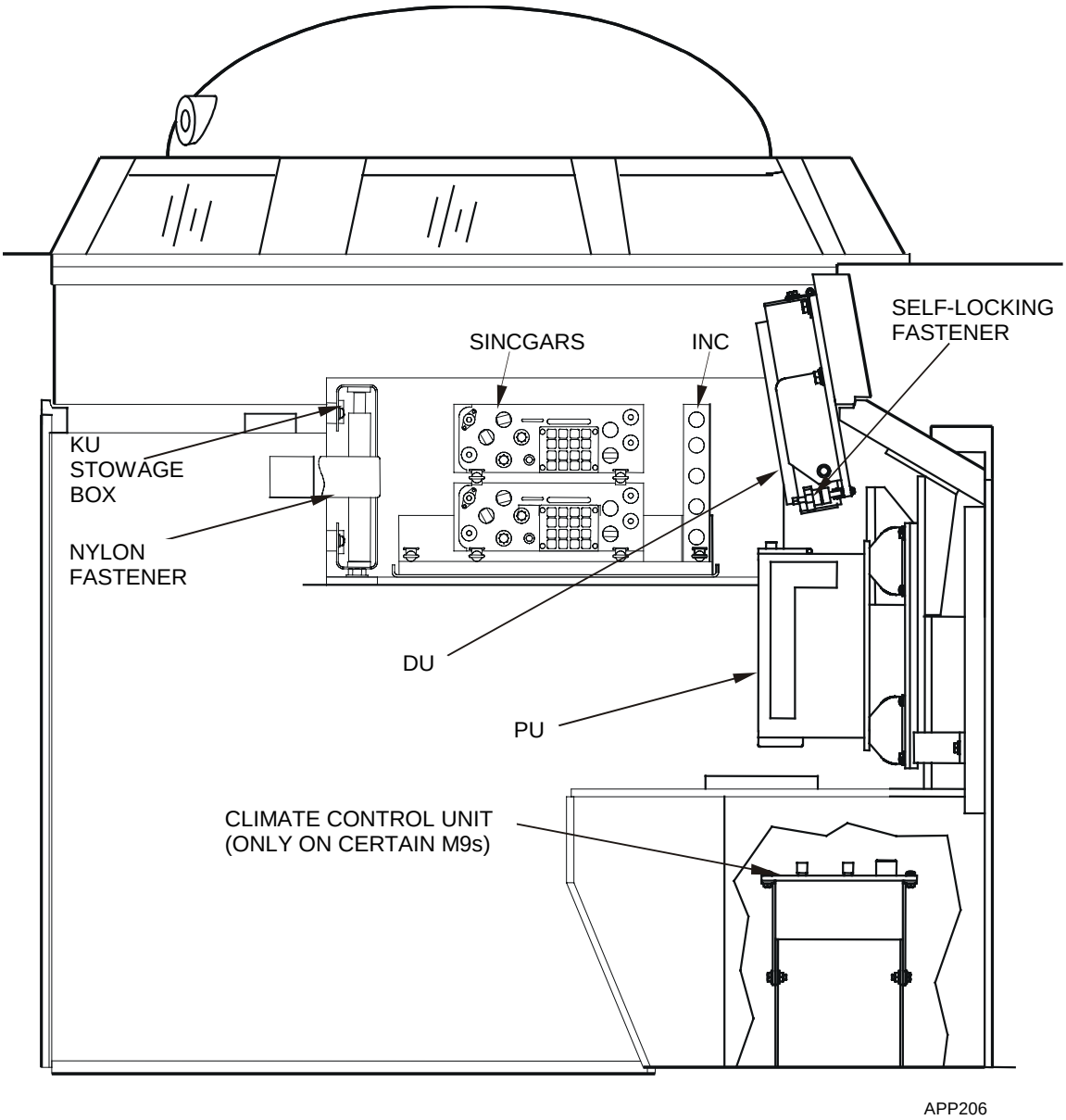

Figure D-3. Mounting View Rearward

D–4.2.1 KU STOWAGE BOX MOUNTING

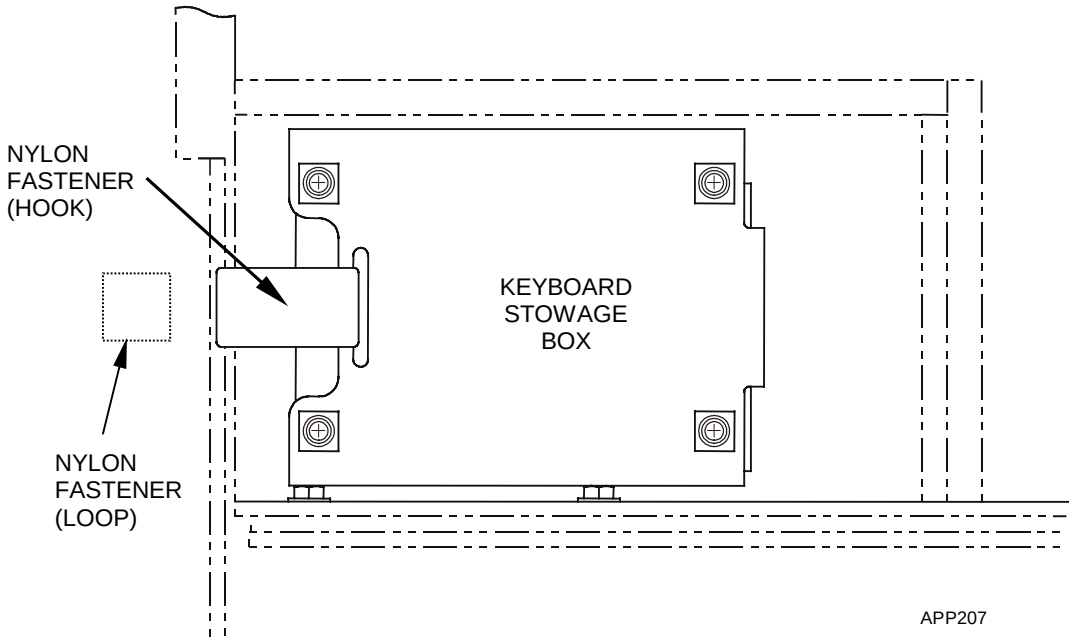

Figure D-4. KU Stowage Box Mounting

Key and Parts List for Climate Control Component Repositioning

ITEM NO.	NOMENCLATURE	CAGE CODE	PART NUMBER	NSN	QTY	SMR
--	Control Unit (Existing)		12879517			
--	Bracket, Control Unit	80212	4250239-1		1	XBOZZ
--	Bracket, Control Unit	80212	4250239-2		1	XBOZZ
--	Screw, Cap, Hexagon	80204	B1821AH025C063N	5305-01-457-8854	1	PAOZZ
--	Screw, Cap, Hexagon	80204	B1821AH025C075N	5305-01-389-8000	4	PAOZZ
--	Washer, Flat	96906	MS27183-10	5310-00-809-4058	5	PAOZZ
--	Washer, Lock	96906	MS35333-40	5310-00-550-1130	5	PAOZZ
--	Nut, Plain, Hexagon	96906	MS35649-2252	5310-00-997-1888	5	PAOZZ
--	Control Unit Mounting					
--	Screw, Machine	96906	MS35206-265	5305-00-984-6212	4	PAOZZ
--	Washer, Lock	96906	MS35333-39	5310-00-576-5752	4	PAOZZ
--	Nut, Plain, Hexagon	96906	MS35649-202	5310-00-934-9758	4	PAOZZ
--	Air Heater Panel		81361-MS-19-1782			
--	Screw, Cap, Hexagon	80204	B1821AH025C075N	5305-01-389-8000	4	PAOZZ
--	Washer, Lock	96906	MS35333-40	5310-00-550-1130	4	PAOZZ
--	Washer, Flat	96906	MS27183-10	5310-00-809-4058	4	PAOZZ

D–5 PLATFORM-UNIQUE TROUBLESHOOTING

Some configurations of the M9 ACE have two PLGR units physically mounted in the vehicle. Only one PLGR is connected. Make sure to address only the PLGR connected to the AN/UYK-128(V) computer.

D–6 REMOVAL/REPLACEMENT IN THE PLATFORM

Most installations must be tailored to the platform. Cables and brackets are unique to the installation. Before a part or assembly is removed from a vehicle, fill out a “Maintenance Request” DA Form 2407. One copy of this completed form must remain with the vehicle and the remaining copies must be kept with the failed component. To prove the operability of the system after an item is replaced, perform the system Functional Check.

D–6.1 FUNCTIONAL CHECK

D–6.1.1 POWER UP

Power up and initialize all interface equipment and the AN/UYK-128(V) In Accordance With (IAW) the Operator’s Manual TM 11-7010-326-10, or Pocket Guide TB 11-7010-326-10.

D–6.1.2 VERIFICATION

NOTE

Observe that the Display Unit PWR, DISP and CPU green LED lights are lit.

a. Observe that the PLGR synchronizes with PU, indicated by the PLGR dialog box showing green.

b. Observe that the Router synchronizes with the PU, indicated by the Router dialog box showing green.

c. At the Session Manager screen, select OPS button to display the OPS screen.

d. Verify the GPS status is either green or amber on the Classification/Status Bar.

e. Verify the Communications status is either green or amber on the Classification/Status Bar.

D–6.1.3 POWER DOWN

Power down all interface equipment and the AN/UYK-128(V) IAW THE Operator’s Manual TM 11-7010-326-10, or Pocket Guide TB 11-7010-326-10.

D–6.2 REMOVE/REPLACE W1 POWER CABLE

Refer to Figure D-5.

D–6.2.1 REMOVE W1 POWER CABLE

WARNING

Before conducting maintenance involving the removal and replacement of system components, ensure that all power to the FBCB2 system is off (including power from the vehicle). Failure to comply with warning may result in equipment damage or injury to personnel.

a. Power down AN/UYK-128(V) system IAW Operator's Manual TM 11-7010-326-10, or Pocket Guide TB 11-7010-326-10.

b. Power down SINCGARS IAW TM 11-5820-890-10-8.

c. Unlatch and slide the Vehicle Amplifier-Adapter (VAA) AM-7239/VRC forward to access W1-P1 power cable connector.

d. Disconnect W1-P1 cable connector from the SINCGARS Mounting Base (MB) (MT-6352/VRC) A4-J2 connector.

e. Disconnect W1-J1 cable connector from interface connector, if necessary.

f. Disconnect W1-P2 cable connector from PU J1 connector.

g. Install protective cap on PU J1 connector.

NOTE

Note cable routing and tie-wrap locations before removing cable or tie-wraps.

h. Remove tie-wraps securing W1 cable using diagonal wire cutters.

i. Remove W1 power cable (1).

D–6.2.2 REPLACE W1 POWER CABLE

a. Route W1 power cable (1) along existing cables behind PU mounting bracket.

b. Remove protective cap from PU J1 connector.

c. Connect W1-P2 cable connector to PU J1 connector.

d. Connect W1-P1 cable connector to SINCGARS Mounting Base (MB) (MT-6352A/VRC) A4-J2 connector.

e. Connect W1-J1 cable connector to interface connector, if applicable.

f. Secure VAA in original mounting position IAW TM 11-5820-890-10-8.

g. Secure W1 cable using tie-wraps.

h. Dress tie-wraps using diagonal wire cutters.

i. Perform Functional Check IAW paragraph D–6.1.

D–6.3 REMOVE/REPLACE W2 DISPLAY CABLE

Refer to Figure D-5.

D–6.3.1 REMOVE W2 DISPLAY CABLE

WARNING

Before conducting maintenance involving the removal and replacement of system components, ensure that all power to the FBCB2 system is off (including power from the vehicle). Failure to comply with warning may result in equipment damage or injury to personnel.

a. Power down AN/UYK-128(V) system IAW Operator's Manual TM 11-7010-326-10, or Pocket Guide TB 11-7010-326-10.

b. Disconnect W2-P1 cable connector from PU J4 connector.

c. Install protective cap on PU J4 connector.

d. Disconnect W2-P2 cable connector from display J1 connector.

e. Install protective cap on display J1 connector.

NOTE

Note cable routing and tie-wrap locations before removing cable or tie-wraps.

f. Remove tie-wraps securing W2 cable using diagonal wire cutters.

g. Remove W2 display cable (6).

D–6.3.2 REPLACE W2 DISPLAY CABLE

a. Route W2 display cable (6) along existing cables behind PU mounting bracket.

b. Remove protective cap from display J1 connector.

c. Connect W2-P2 cable connector to display J1 connector.

d. Remove protective cap from PU J4 connector.

e. Connect W2-P1 cable connector to PU J4 connector.

f. Secure W2 cable using tie-wraps.

g. Dress tie-wraps using diagonal wire cutters.

h. Perform Functional Check IAW paragraph D–6.1.

D–6.4 REMOVE/REPLACE W3 SERIAL INTERFACE ADAPTER DEVICE (SIAD)

Refer to Figure D-5.

D–6.4.1 REMOVE W3 SERIAL INTERFACE ADAPTER DEVICE (SIAD)

WARNING

Before conducting maintenance involving the removal and replacement of system components, ensure that all power to the FBCB2 system is off (including power from the vehicle). Failure to comply with warning may result in equipment damage or injury to personnel.

a. Power down AN/UYK-128(V) system IAW Operator's Manual TM 11-7010-326-10, or Pocket Guide TB 11-7010-326-10.

b. Disconnect W3N-P1 cable connector from W3 SIAD J1 connector.

c. Disconnect W3P-P1 cable connector from W3 SIAD J2 connector.

d. Disconnect W3 SIAD-P1 cable connector from PU J3 connector.

e. Install protective cap on PU J3 connector.

NOTE

Note cable routing and tie-wrap locations before removing cable or tie-wraps.

f. Remove tie-wraps securing W3 SIAD using diagonal wire cutters.

g. Remove W3 SIAD (3).

D–6.4.2 REPLACE W3 SERIAL INTERFACE ADAPTER DEVICE (SIAD)

a. Route W3 SIAD (3).

b. Remove protective cap from PU J3 connector.

c. Connect W3 SIAD-P1 cable connector to PU J3 connector.

d. Connect W3P-P1 cable connector to W3 SIAD J2 connector.

e. Connect W3N-P1 cable connector to W3 SIAD J1 connector.

f. Secure W3 SIAD using tie-wraps.

g. Dress tie-wraps using diagonal wire cutters.

h. Perform Functional Check IAW paragraph D–6.1.

D–6.5 REMOVE/REPLACE W3P PLGR CABLE

Refer to Figure D-5.

D–6.5.1 REMOVE W3P PLGR CABLE

WARNING

Before conducting maintenance involving the removal and replacement of system components, ensure that all power to the FBCB2 system is off (including power from the vehicle). Failure to comply with warning may result in equipment damage or injury to personnel.

a. Power down AN/UYK-128(V) system IAW Operator's Manual TM 11-7010-326-10, or Pocket Guide TB 11-7010-326-10.

b. Disconnect W3P-P1 cable connector from W3 SIAD J2 connector.

c. Remove PLGR from mount.

d. Disconnect W3-P2 cable connector from PLGR J2 connector using an offset flat screwdriver.

NOTE

Note cable routing and tie-wrap locations before removing cable or tie-wraps.

e. Remove tie-wraps securing W3P cable using diagonal wire cutters.

f. Remove W3P cable (4).

D–6.5.2 REPLACE W3P PLGR CABLE

a. Route W3P cable (4) along existing cables behind PU mounting bracket.

b. Connect W3P-P2 cable connector to PLGR J2 connector using an offset flat screwdriver.

c. Install PLGR in mount.

d. Connect W3P-P1 cable connector to W3 SIAD J2 connector.

e. Secure W3P cable using tie-wraps.

f. Dress tie-wraps using diagonal wire cutters.

g. Perform Functional Check IAW paragraph D–6.1.

D–6.6 REMOVE/REPLACE W3N INC CABLE

Refer to Figure D-5.

D–6.6.1 REMOVE W3N INC CABLE

WARNING

Before conducting maintenance involving the removal and replacement of system components, ensure that all power to the FBCB2 system is off (including power from the vehicle). Failure to comply with warning may result in equipment damage or injury to personnel.

a. Power down AN/UYK-128(V) system IAW Operator's Manual TM 11-7010-326-10, or Pocket Guide TB 11-7010-326-10.

b. Disconnect W3N-P1 cable connector from W3 SIAD J1 connector.

c. Disconnect W3N-P2 cable connector from SINCGARS INC J6 connector.

NOTE

Note the cable routing and tie-wrap locations before removing cable or tie-wraps.

d. Remove tie-wraps securing W3N cable using diagonal cutters.

e. Remove W3N cable (5).

D–6.6.2 REPLACE W3N INC CABLE

a. Route W3N cable (5) along existing cables behind PU mounting bracket.

b. Connect W3N-P2 cable connector to SINCGARS INC J6 connector.

c. Connect W3N-P1 cable connector to W3 SIAD J1 connector.

d. Secure W3N cable using tie-wraps.

e. Dress tie-wraps using diagonal wire cutters.

f. Perform Functional Check IAW paragraph D–6.1.

D–6.7 REMOVE/REPLACE W4 AUDIO CABLE

Refer to Figure D-5.

D–6.7.1 REMOVE W4 AUDIO CABLE

WARNING

Before conducting maintenance involving the removal and replacement of system components, ensure that all power to the FBCB2 system is off (including power from the vehicle). Failure to comply with warning may result in equipment damage or injury to personnel.

a. Power down AN/UYK-128(V) system IAW Operator's Manual TM 11-7010-326-10, or Pocket Guide TB 11-7010-326-10.

b. Disconnect W4-P1 cable connector from PU J2 connector.

c. Install protective cap on PU J2 connector.

d. Disconnect W4-P2 cable connector from Intercom Box C-2298 connector.

e. Disconnect W4-J1 cable connector from Combat Vehicle Crew (CVC) helmet P1 connector.

NOTE

Note cable routing and tie-wrap locations before removing cable or tie-wraps.

f. Remove tie-wraps securing W4 cable using diagonal wire cutters.

g. Remove W4 audio cable (2).

D–6.7.2 REPLACE W4 AUDIO CABLE

a. Route W4 audio cable (2).

b. Connect W4-J1 cable connector to CVC helmet P1 connector.

c. Connect W4-P2 cable connector to Intercom Box C-2298 connector.

d. Remove protective cap from PU J2 connector.

e. Connect W4-P1 cable connector to PU J2 connector.

f. Secure W4 cable using tie-wraps.

g. Dress tie-wraps using diagonal wire cutters.

h. Perform Functional Check IAW paragraph D–6.1.

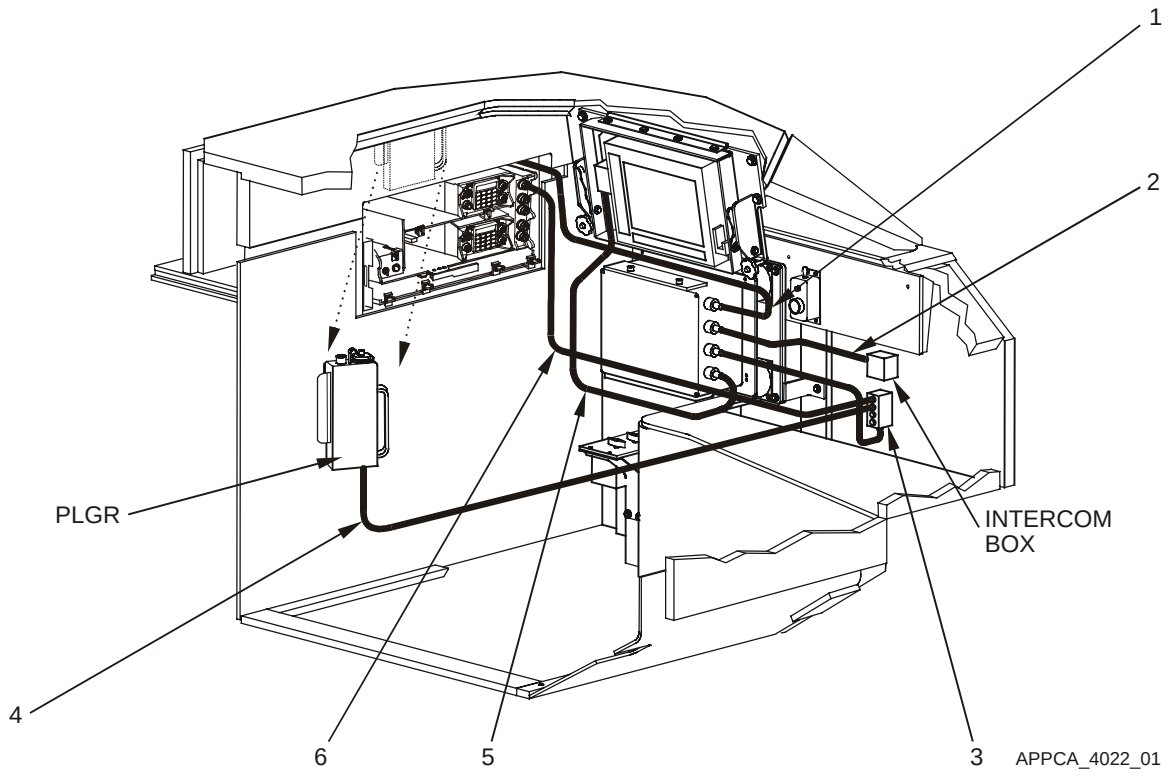

Figure D-5. Cable Run

Key and Parts List for Figure D-5

ITEM NO.	NOMENCLATURE	CAGE CODE	PART NUMBER	NSN	QTY	SMR
1	Cable Assembly W1	0J198	861880-6	5995-01-478-4952	1	PAODD
2	Cable Assembly W4	0J198	881270-2	5995-01-478-4928	1	PAODD
3	Adapter Assy SIAD W3	0J198	881331-1	4920-01-478-3722	1	PAODD
4	Cable Assembly W3P	0J198	881335-3	5995-01-478-4898	1	PAODD
5	Cable Assembly W3N	0J198	881336-2	5995-01-478-4922	1	PAODD
6	Cable Assembly W2	0J198	881327-1	5995-01-478-4876	1	PAODD
--	Strap, Tie Down, Elect	39428	7130K31		A/R	PAOZZ

D–6.8 REMOVE/REPLACE PU ISOLATION ASSEMBLY

Refer to Figure D-6.

NOTE

Ground straps are attached to components at one end (PU and DU) and a frame ground at the other end. Regardless of where the ground strap terminates, it is usually a burnished (void of paint) area. If the ground strap is removed from a burnished area make sure to return it to the same burnished area. Where applicable, always connect the ground strap first when assembling, and disconnect the ground strap last when disassembling.

D–6.8.1 REMOVE PU ISOLATION ASSEMBLY

WARNING

Before conducting maintenance involving the removal and replacement of system components, ensure that all power to the FBCB2 system is off (including power from the vehicle). Failure to comply with warning may result in equipment damage or injury to personnel.

a. Power down AN/UYK-128(V) system IAW Operator's Manual TM 11-7010-326-10, or Pocket Guide TB 11-7010-326-10.

b. Loosen two self-locking fasteners on display mount assembly.

c. Extend display fully until links are in over-center position to allow access to PU.

NOTE

Do not remove the Removable Hard Disk Drive Cartridge (RHDDC) or thermal guard (if installed) from PU.

d. Remove PU IAW Unit Maintenance Manual TM 11-7010-326-20&P, Chapter 2.

e. Remove one hex head screw (3), lock washers (4), flat washers (5) and ground strap from PU isolation assembly (1) bottom plate and PU mounting bracket (2) using a 7/16" socket with ratchet and 3" extension.

f. Remove remaining five hex head screws (3), lock washers (4) and flat washers (5) from PU isolation assembly (1) bottom plate and PU mounting bracket (2) using a 7/16" socket with ratchet and 3" extension.

g. Remove PU isolation assembly (1) from PU mounting bracket (2).

D–6.8.2 REPLACE PU ISOLATION ASSEMBLY

a. Align six PU isolation assembly (1) bottom plate holes with PU mounting bracket (2) installation inserts.

NOTE

To ensure positive ground, PU ground strap must make direct contact with bare metal. Ensure PU ground strap is installed in its original location at the PU isolation assembly bottom plate mounting hole. Slip the lock washer, flat washer and ground strap on the mounting screw before installing and tightening screw.

b. Install one hex head screw (3), lock washers (4), flat washers (5) and ground strap on PU isolation assembly (1) bottom plate and PU mounting bracket (2) using a 7/16" socket with ratchet and 3" extension.

c. Install remaining five hex head screws (3), lock washers (4) and flat washers (5) on PU isolation assembly (1) bottom plate and PU mounting bracket (2) using a 7/16" socket with ratchet and 3" extension.

d. Replace PU IAW Unit Maintenance Manual TM 11-7010-326-20&P, Chapter 2.

e. Return display mount links to the partially folded position and stow display.

f. Tighten two self-locking fasteners until display mount assembly is secured.

g. Perform Functional Check IAW paragraph D–6.1.

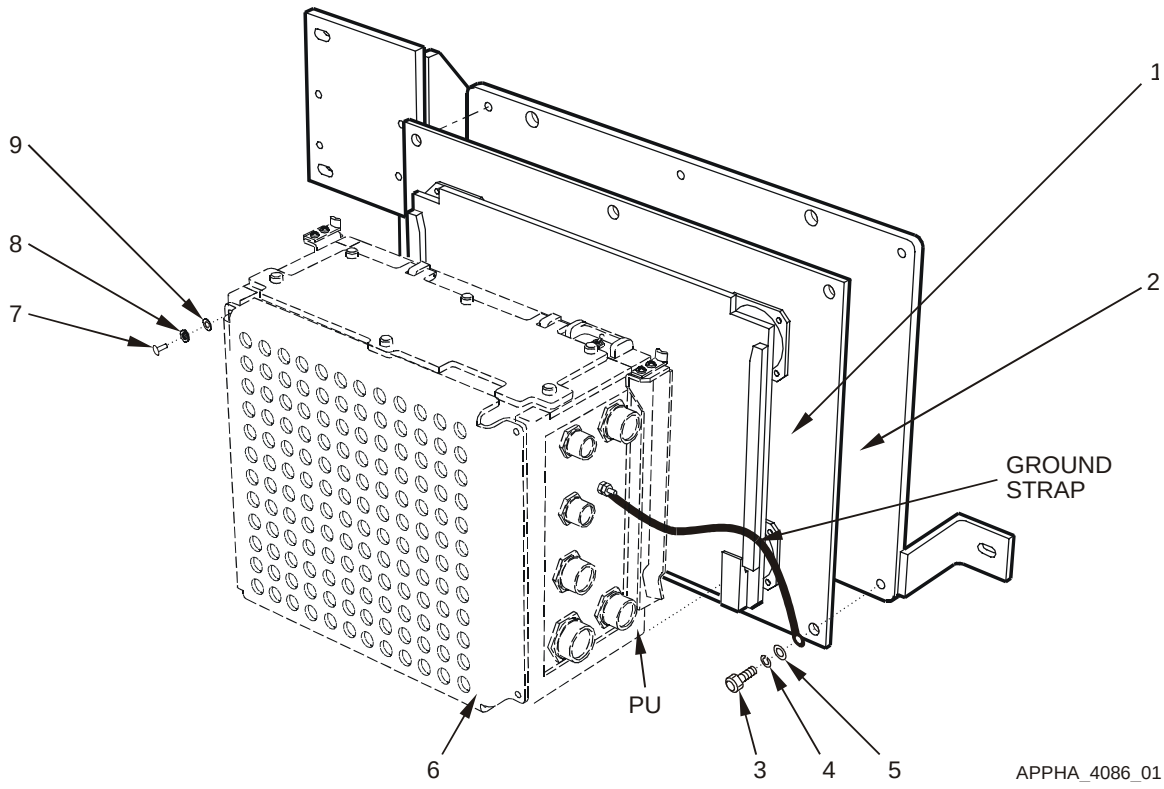

Figure D-6. Remove and Replace PU Isolation Assembly

Key and Parts List for Figure D-6

ITEM NO.	NOMENCLATURE	CAGE CODE	PART NUMBER	NSN	QTY	SMR
1	(PU isolation assembly) Plate, Resilient Mount PU	0J198	872826-1	5340-01-481-5742	1	PAODD
2	Bracket, PU Mounting	80212	4250237		1	XBOZZ
3	Screw, Cap, Hexagon	80204	B1821AH025C063N	5305-01-457-8854	6	PAOZZ
4	Washer, Lock	96906	MS35333-40	5310-00-550-1130	6	PAOZZ
5	Washer, Flat	96906	MS27183-10	5310-00-809-4058	6	PAOZZ
--	Thermal Guard Assembly (if installed)	0J198	872860-1		1	XBOOO
6	Thermal Guard	0J198	872860-11		1	PAOZZ
7	Screw, Machine	96906	MS51958-63	5305-00-059-3659	4	PAOZZ
8	Grommet	63590	BG2903	5325-01-291-3383	4	PAOZZ
9	Retainer, Bolt	032U6	75-4119		4	PAOZZ

D–6.9 REMOVE/REPLACE PU MOUNTING BRACKET

Refer to Figure D-7.

D–6.9.1 REMOVE PU MOUNTING BRACKET

WARNING

Before conducting maintenance involving the removal and replacement of system components, ensure that all power to the FBCB2 system is off (including power from the vehicle). Failure to comply with warning may result in equipment damage or injury to personnel.

a. Power down AN/UYK-128(V) system IAW Operator's Manual TM 11-7010-326-10, or Pocket Guide TB 11-7010-326-10.

b. Loosen two self-locking fasteners on display mount assembly.

c. Extend display fully until links are in over-center position to allow access to PU.

NOTE

Do not remove the Removable Hard Disk Drive Cartridge (RHDDC) or thermal (if installed) guard from PU.

d. Remove PU IAW Unit Maintenance Manual TM 11-7010-326-20&P, Chapter 2.

e. Remove PU isolation assembly IAW paragraph D–6.8.1.

f. Remove three hex head screws (2), lock washers (3) and flat washers (4) from PU mounting bracket (1) assembly using a 7/16" socket with ratchet and 3" extension.

g. Remove PU mounting bracket (1).

D–6.9.2 REPLACE PU MOUNTING BRACKET

a. Align three holes in PU mounting bracket (1) assembly with screw thread inserts (5).

b. Install three hex head screws (2), lock washers (3) and flat washers (4) on PU mounting bracket (1) assembly using a 7/16" socket with ratchet and 3" extension.

c. Install PU isolation assembly IAW paragraph D–6.8.2.

d. Install PU IAW Unit Maintenance Manual TM 11-7010-326-20&P, Chapter 2.

e. Return display mount links to the partially folded position and stow display.

f. Tighten two self-locking fasteners until display mount assembly is secured.

g. Perform Functional Check IAW paragraph D–6.1.

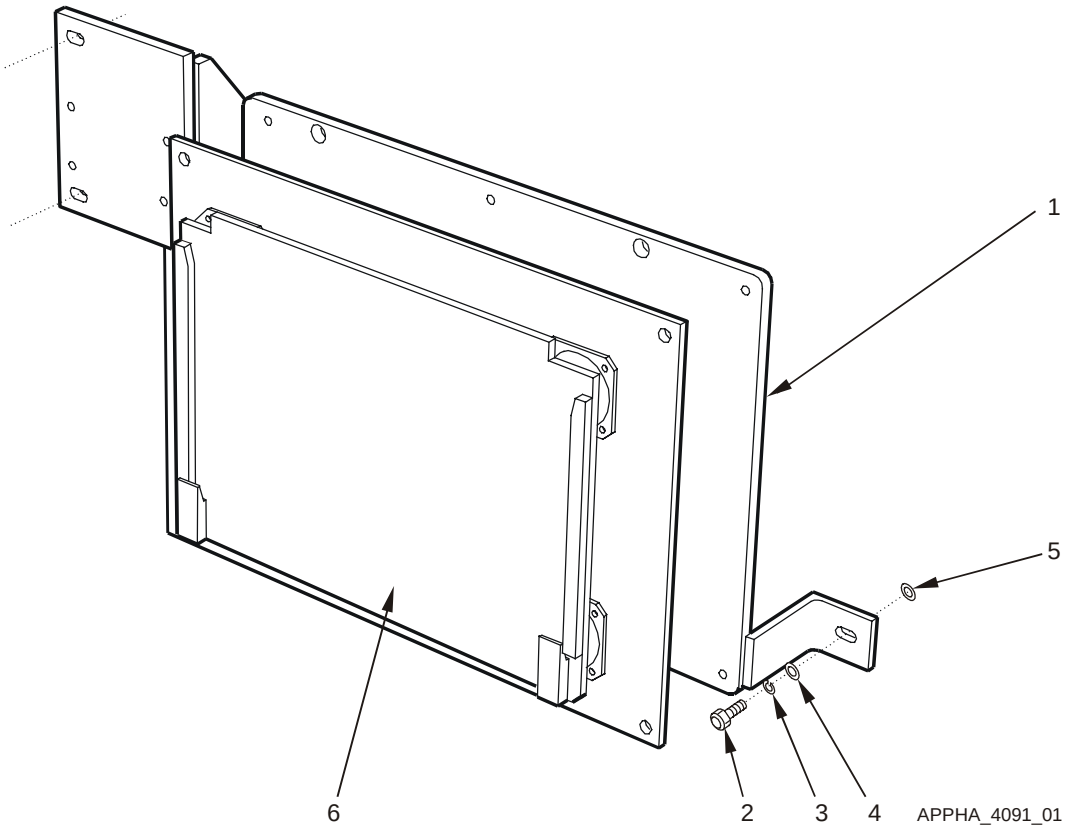

Figure D-7. Remove and Replace PU Mounting Bracket

Key and Parts List for Figure D-7

ITEM NO.	NOMENCLATURE	CAGE CODE	PART NUMBER	NSN	QTY	SMR
1	Bracket, PU Mounting	80212	4250237		1	XBOZZ
2	Screw, Cap, Hexagon	80204	B1821AH025C100N	5305-01-389-7984	3	PAOZZ
3	Washer, Lock	96906	MS35333-40	5310-00-550-1130	3	PAOZZ
4	Washer, Flat	96906	MS27183-10	5310-00-809-4058	3	PAOZZ
5	Insert, Screw Thread	39428	91731A052		3	PAOZZ
6	(PU isolation assembly) Plate, Resilient Mount PU	0J198	872826-1	5340-01-481-5742	1	PAODD
--	Bolt, Machine	96906	MS35190-291	5306-00-042-6921	4	PAOZZ

D–6.10 REMOVE/REPLACE DU ISOLATION ASSEMBLY

Refer to Figure D-8.

NOTE

Ground straps are attached to components at one end (PU and DU) and a frame ground at the other end. Regardless of where the ground strap terminates, it is usually a burnished (void of paint) area. If the ground strap is removed from a burnished area make sure to return it to the same burnished area. Where applicable, always connect the ground strap first when assembling, and disconnect the ground strap last when disassembling.

D–6.10.1 REMOVE DU ISOLATION ASSEMBLY

WARNING

Before conducting maintenance involving the removal and replacement of system components, ensure that all power to the FBCB2 system is off (including power from the vehicle). Failure to comply with warning may result in equipment damage or injury to personnel.

a. Power down AN/UYK-128(V) system IAW Operator's Manual TM 11-7010-326-10, or Pocket Guide TB 11-7010-326-10.

b. Remove DU IAW Unit Maintenance Manual TM 11-7010-326-20&P, Chapter 2.

c. Loosen two self-locking fasteners on display mount assembly.

d. Extend display fully until links are in over-center position to allow access to PU.

e. Remove four hex head screws (2), flat washers (3), lock washers (4) and hex nuts (5) from DU isolation assembly (6) bottom plate and DU mount assembly (1) using a 7/16" socket with ratchet, 3" extension and a 7/16" open-end wrench.

f. Remove DU isolation assembly (6) from DU mount assembly (1).

D–6.10.2 REPLACE DU ISOLATION ASSEMBLY

a. Align four holes in DU isolation assembly (6) bottom plate with DU mount assembly (1) installation holes.

b. Install four hex head screws (2), flat washers (3), lock washers (4) and hex nuts (5) on DU isolation assembly (6) bottom plate and DU mount assembly (1) using a 7/16" socket with ratchet, 3" extension and a 7/16" open-end wrench.

c. Return display mount links to the partially folded position and stow display.

d. Tighten two self-locking fasteners until display mount assembly is secured.

e. Install DU IAW Unit Maintenance Manual TM 11-7010-326-20&P, Chapter 2.

f. Perform Functional Check IAW paragraph D–6.1.

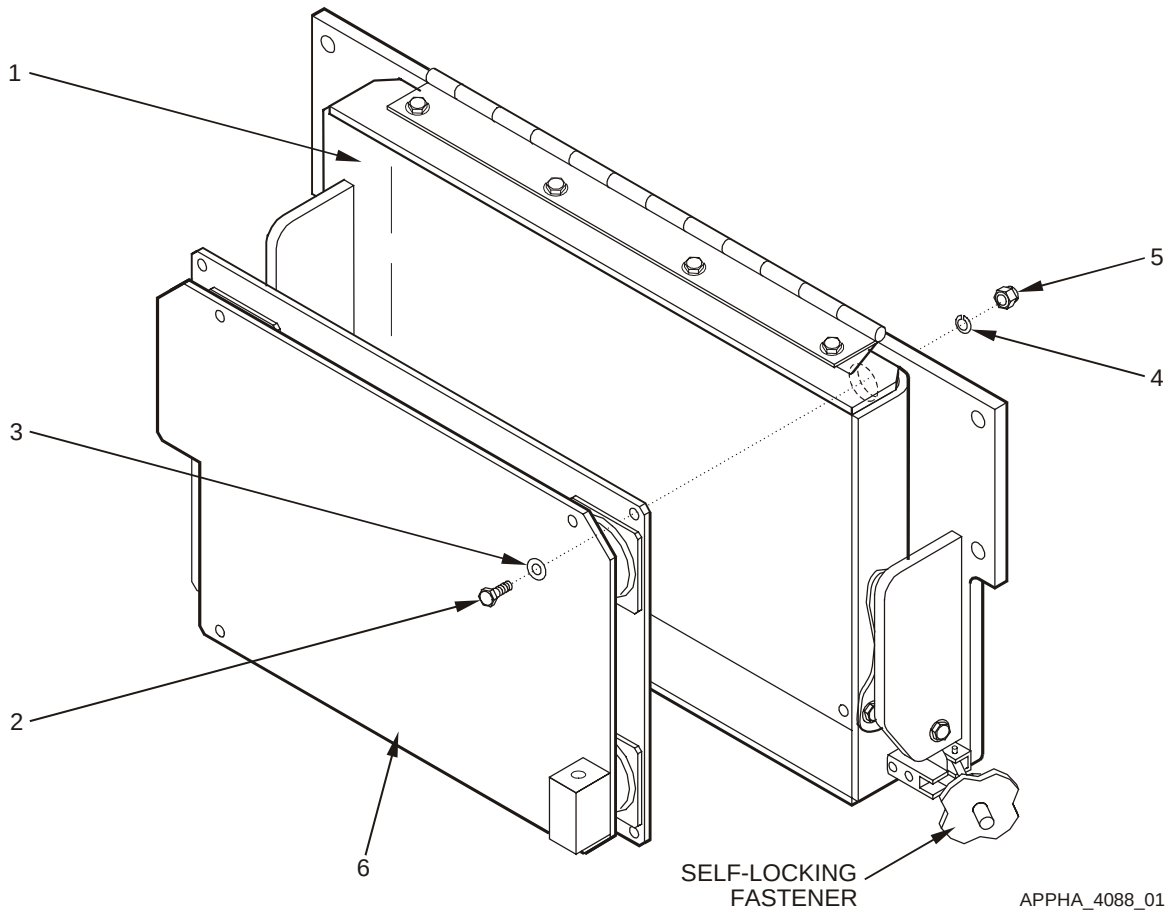

Figure D-8. Remove and Replace DU Isolation Assembly

Key and Parts List for Figure D-8

ITEM NO.	NOMENCLATURE	CAGE CODE	PART NUMBER	NSN	QTY	SMR
1	Assembly, DU Mount	80212	4250155		1	PAOZZ
2	Screw, Cap, Hexagon	80204	B1821AH025C100N	5305-01-389-7984	4	PAOZZ
3	Washer, Flat	96906	MS27183-10	5310-00-809-4058	4	PAOZZ
4	Washer, Lock	96906	MS35333-40	5310-00-550-1130	4	PAOZZ
5	Nut, Plain, Hexagon	10110	MS51967-2	5310-01-291-3389	4	PAOZZ
6	(DU isolation assembly) Plate, Resilient Mount DU	0J198	872870-1		1	PAODD
--	Assembly, DU Lock	0J198	872843-1		1	XBOOO
--	Bracket, Locking	0J198	861871-3		1	XBOZZ
--	Washer, Lock	96906	MS35338-42	5310-00-045-3299	2	PAOZZ
--	Screw	80205	MS35190-253	5305-00-059-4568	2	PAOZZ

D–6.11 REMOVE/REPLACE DU MOUNT ASSEMBLY AND LINKAGE

Refer to Figure D-9, Figure D-10 and Figure D-11.

D–6.11.1 REMOVE DU MOUNT ASSEMBLY AND LINKAGE

WARNING

Before conducting maintenance involving the removal and replacement of system components, ensure that all power to the FBCB2 system is off (including power from the vehicle). Failure to comply with warning may result in equipment damage or injury to personnel.

a. Power down AN/UYK-128(V) system IAW Operator's Manual TM 11-7010-326-10, or Pocket Guide TB 11-7010-326-10.

b. Remove DU IAW Unit Maintenance Manual TM 11-7010-326-20&P, Chapter 2.

c. Remove DU isolation assembly IAW paragraph D–6.10.1.

d. Remove four hex head screws (2), lock washers (3) and flat washers (4) from DU support plate (1) using a 9/16" socket with ratchet and 3" extension.

e. Remove DU support plate (1) from screw thread inserts (5).

NOTE

If removing display mount (11) from DU support plate (1), perform steps f, g and h.

f. Remove one hex head screw (16), spring washer (17), flat washer (18), nylon washer (19), nylon washer (19), flat washer (18), spring washer (17) and self-locking hex nut (15) from each side of display mount (11) and lower links (7, 8) using a 7/16" socket with ratchet and 7/16" open-end wrench.

g. Remove four hex head screws (13), eight flat washers (14) and four self-locking hex nuts (15) from display mount (11) and hinge using a 7/16" socket with ratchet and 7/16" open-end wrench.

h. Remove display mount (11) from DU support plate (1).

NOTE

If removing upper and lower over-center links, perform steps i and j for each side of the display mount. Before disassembling the two links, review configuration of the folding hardware shown in Figure D-9, Figure D-10 and Figure D-11.

i. Remove one hex head screw (23), spring washer (17), flat washer (18), nylon washer (19), nylon washer (19), flat washer (18), spring washer (17) and self-locking hex nut (15) from each side of DU support plate (1) and upper links (6) using a 7/16" socket with ratchet and 7/16" open-end wrench.

j. Remove one hex head screw (20), spring washer (17), flat washer (21), nylon washer (19), flat washer (21), spring washer (17) and jam hex nut (22) attaching over-center links together using a 7/16" socket with ratchet and 7/16" open-end wrench.

D–6.11.2 REPLACE DU MOUNT ASSEMBLY AND LINKAGE

NOTE

If reassembling upper and lower over-center links, perform steps a and b for each side of the display mount. Review Figure D-9, Figure D-10 and Figure D-11 before reassembling links and display mount assembly.

a. Place and align one nylon washer (19) between upper and lower link attaching holes.

b. Install one hex head screw (20), spring washer (17) and flat washer (21) on the head side of the screw and one flat washer (21), spring washer (17) and jam hex nut (22) on the opposite side securing the two over-center links together using a 7/16" socket with ratchet and open-end wrench.

NOTE

If reassembling links on display mount (11) and DU support plate (1), perform Steps c through f for each side linkage. Screw threads should be facing each other and head of screws should be opposite.

c. Align and place nylon washer (19) between the DU support plate (1) and upper link (6).

d. Install one hex head screw (23), spring washer (17), flat washer (18), nylon washer (19), flat washer (18), spring washer (17) and self-locking hex nut (15) on upper link (6) and DU support plate (1) using a 7/16" socket with ratchet and open-end wrench.

e. Align and place nylon washer (19) between the display mount (11) and lower link (7, 8).

f. Install one hex head screw (16), spring washer (17), flat washer (18), nylon washer (19), flat washer (18), spring washer (17) and self-locking hex nut (15) on lower link (7, 8) and display mount (11) using a 7/16" socket with ratchet and open-end wrench.

NOTE

If replacing display mount (11) onto the DU support plate (1), perform Steps g through i.

g. Align four display mount holes with hinge installation holes.

h. Install four hex head screws (13), eight flat washers (14) and four self-locking hex nuts (15) on display mount (11) and hinge using a 7/16" socket with ratchet and 7/16” open-end wrench.

i. Place display mount in fully folded position (flat) to ensure proper installation.

NOTE

If replacing DU support plate (1) in vehicle, perform Steps j through n.

j. Align four holes in DU support plate (1) with screw thread inserts (5) on vehicle.

k. Install four hex head screws (2), lock washers (3) and flat washers (4) on DU support plate (1) and screw thread inserts (5) using a 9/16" socket with ratchet and 3” extension.

l. Install DU isolation assembly IAW paragraph D–6.10.2.

m. Install DU IAW Unit Maintenance Manual TM 11-7010-326-20&P, Chapter 2.

n. Perform Functional Check IAW paragraph D–6.1.

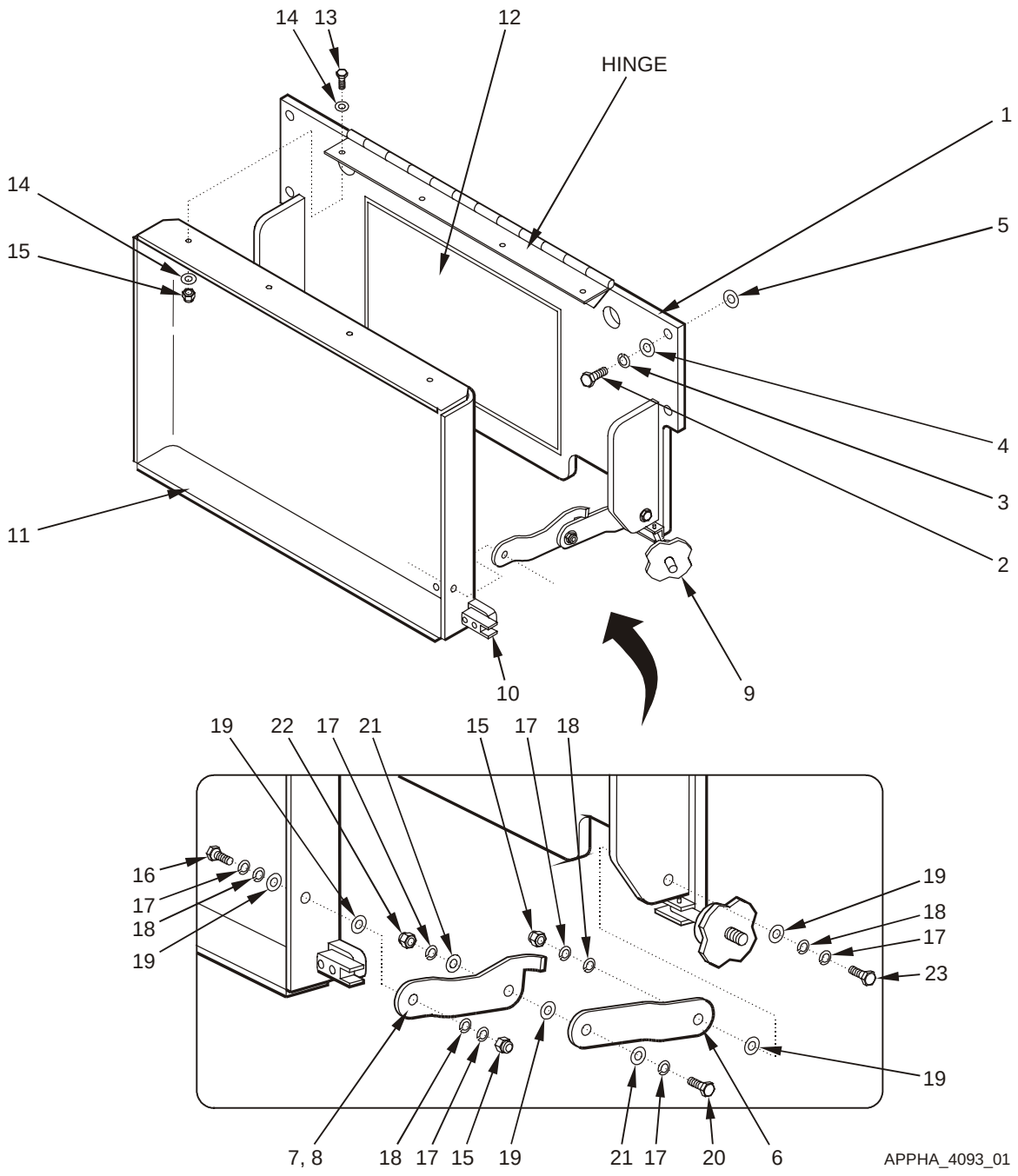

Figure D-9. Remove and Replace DU Mount Assembly and Linkage

Key and Parts List for Figure D-9

ITEM NO.	NOMENCLATURE	CAGE CODE	PART NUMBER	NSN	QTY	SMR
--	Assembly, DU Mount	80212	4250155		1	PAOOO
1	Plate, Support	80212	4250233		1	PAOZZ
2	Screw, Cap, Hexagon	80204	B1821AH038C125N	5305-01-407-6217	4	PAOZZ
3	Washer, Lock	96906	MS35338-46	5310-00-637-9541	4	PAOZZ
4	Washer, Flat	96906	MS27183-14	5310-00-080-6004	4	PAOZZ
5	Insert, Screw Thread	96906	MS51832-104	5325-00-005-0460	4	PAOZZ
6	Link, Upper, L & R	80212	4250235		2	PAOZZ
7	Link, Lower Left	80212	4250236-1		1	PAOZZ
8	Link, Lower Right	80212	4250236-2		2	PAOZZ
9	Fastener, Self-Locking	96906	MS14108-1	5340-01-480-9152	2	PAOZZ
10	Hook		439507-0191		2	PAOZZ
11	Mount, Display	80212	4250234		1	PAOZZ
12	Pad, Rubber Display	80212	4250155-11		1	PAOZZ
13	Screw, Cap, Hexagon	80204	B1821AH025C075N	5305-01-389-8000	4	PAOZZ
14	Washer, Flat	96906	MS27183-10	5310-00-809-4058	8	PAOZZ
15	Nut, Self-Locking Hex	96906	MS51922-1	5310-00-088-1251	8	PAOZZ
16	Screw, Cap, Hexagon	80204	B1821AH025C088N	5305-01-389-8787	2	PAOZZ
17	Washer, Spring	92830	B0500-018-S	5310-01-053-7012	12	PAOZZ
18	Washer, Flat	96906	MS27183-10	5310-00-809-4058	8	PAOZZ
19	Washer, Nylon	96906	MS51859-6	5310-00-502-0106	10	PAOZZ
20	Screw, Cap, Hex	80204	B1821AH025C063N	5305-01-457-8854	2	PAOZZ
21	Washer, Flat	96906	MS15795-852	5310-01-304-8733	4	PAOZZ
22	Nut, Plain Hex Jam	96906	MS35691-1	5310-00-851-2674	2	PAOZZ
23	Screw, Cap, Hexagon	80204	B1821AH025C100N	5305-01-389-7984	2	PAOZZ

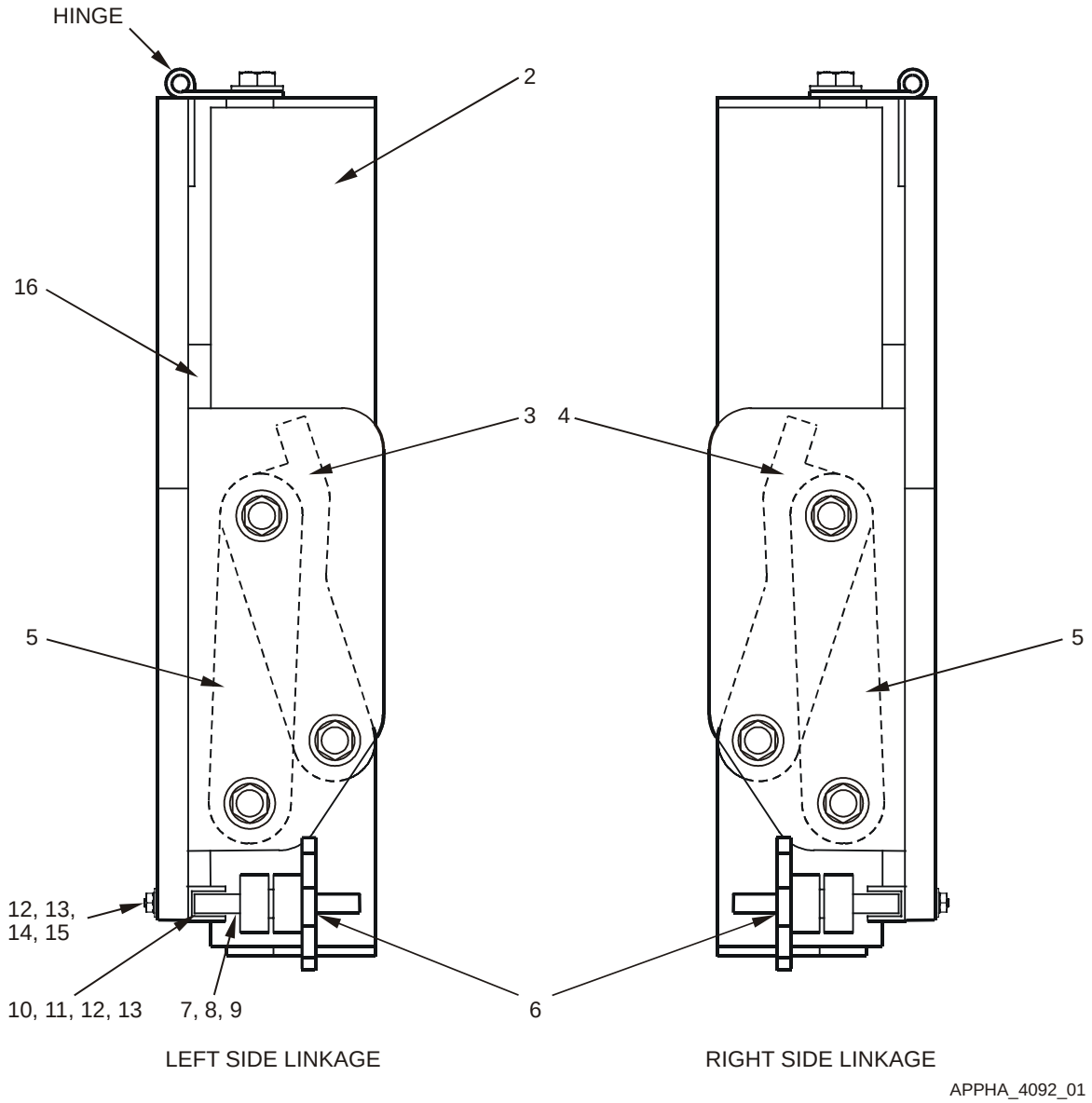

Figure D-10. Left and Right Side Linkage

Key and Parts List for Figure D-10

ITEM NO.	NOMENCLATURE	CAGE CODE	PART NUMBER	NSN	QTY	SMR
--	Assembly, DU Mount	80212	4250155		1	PAOOO
1	Plate, Support	80212	4250233		1	PAOZZ
2	Mount, Display	80212	4250234		1	PAOZZ
3	Link, Lower Left	80212	4250236-1		1	PAOZZ
4	Link, Lower Right	80212	4250236-2		1	PAOZZ
5	Link, Upper, L & R	80212	4250235		2	PAOZZ
6	Fastener, Self-Locking	96906	MS14108-1	5340-01-480-9152	2	PAOZZ
7	Hinge, Leaf Strap	96906	MS14108-20C	5340-01-157-5185	2	PAOZZ
8	Pin, Straight Headed	96906	MS20392-13P19	5315-01-481-0897	2	PAOZZ
9	Pin, Cotter	96906	MS24665-151	5315-00-815-1405	2	PAOZZ
10	Hook		439507-0191		2	PAOZZ
11	Screw, Pan Head	96906	MS35206-246	5305-01-300-7444	4	PAOZZ
12	Washer, Flat	96906	MS27183-7	5310-00-809-8544	12	PAOZZ
13	Washer, Lock	96906	MS35338-42	5310-00-045-3299	8	PAOZZ
14	Screw, Pan Head	96906	MS35206-249	5305-00-984-6197	4	PAOZZ
15	Nut, Plain Hexagon	96906	MS35649-282	5310-00-934-9757	4	PAOZZ
16	Pad, Rubber Display	80212	4250155-11		1	PAOZZ

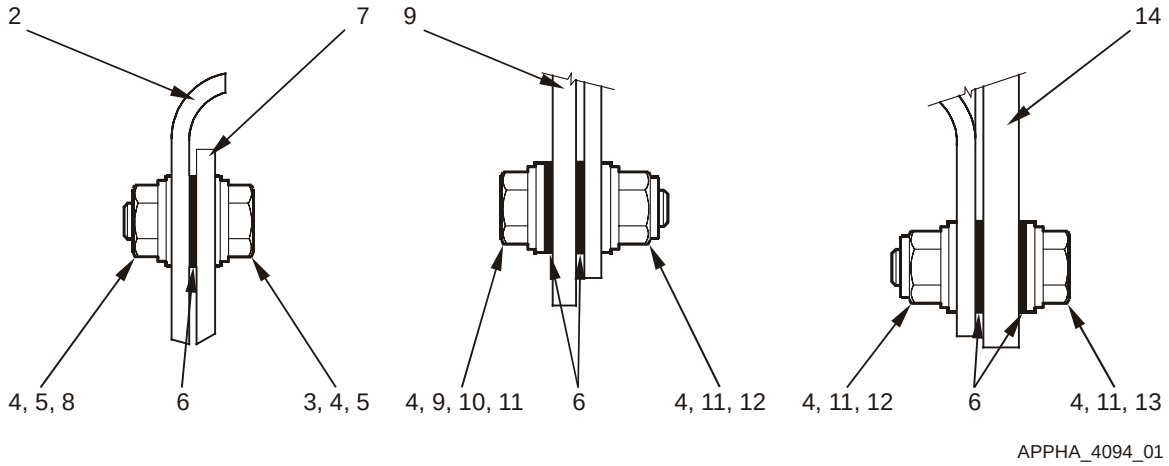

Figure D-11. Detail Linkage Hardware

Key and Parts List for Figure D-11

ITEM NO.	NOMENCLATURE	CAGE CODE	PART NUMBER	NSN	QTY	SMR
--	Assembly, DU Mount	80212	4250155		1	PAOOO
1	Link, Lower Left	80212	4250236-1		1	PAOZZ
2	Link, Lower Right	80212	4250236-2		1	PAOZZ
3	Screw, Cap, Hex	80204	B1821AH025C063N	5305-01-457-8854	2	PAOZZ
4	Washer, Spring	92830	B0500-018-S	5310-01-053-7012	12	PAOZZ
5	Washer, Flat	96906	MS15795-852	5310-01-304-8733	4	PAOZZ
6	Washer, Nylon	96906	MS51859-6	5310-00-502-0106	10	PAOZZ
7	Link, Upper, L & R	80212	4250235		2	PAOZZ
8	Nut, Plain Hex Jam	96906	MS35691-1	5310-00-851-2674	2	PAOZZ
9	Mount, Display		4250234		1	XBOZZ?
10	Screw, Cap, Hexagon	80204	B1821AH025C088N	5305-01-389-8787	2	PAOZZ
11	Washer, Flat	96906	MS27183-10	5310-00-809-4058	8	PAOZZ
12	Nut, Self-Locking Hex	96906	MS51922-1	5310-00-088-1251	8	PAOZZ
13	Screw, Cap, Hexagon	80204	B1821AH025C100N	5305-01-389-7984	2	PAOZZ
14	Plate, Support		4250233		1	XBOZZ

D–6.12 REMOVE/REPLACE KEYBOARD UNIT (KU) STOWAGE BOX

Refer to Figure D-12.

D–6.12.1 REMOVE KEYBOARD UNIT (KU) STOWAGE BOX

WARNING

Before conducting maintenance involving the removal and replacement of system components, ensure that all power to the FBCB2 system is off (including power from the vehicle). Failure to comply with warning may result in equipment damage or injury to personnel.

a. Power down AN/UYK-128(V) system IAW Operator's Manual TM 11-7010-326-10, or Pocket Guide TB 11-7010-326-10.

b. Power down SINCGARS IAW TM 5820-890-10-8.

c. Unlatch and slide the Vehicle Amplifier-Adapter (VAA) forward from SINCGARS Mounting Base (MB) to allow access to W1 cable connector IAW TM 11-5820-890-10-8.

d. Unfasten nylon (loop and hook) fastener (5, 6) and remove keyboard from keyboard stowage box.

e. Remove four machine screws (2), lock washers (3) and flat washers (4) from KU stowage box (1) bottom plate using a No. 2 cross-tip screwdriver.

f. Remove keyboard stowage box from radio compartment.

D–6.12.2 REPLACE KEYBOARD UNIT (KU) STOWAGE BOX

a. Align four holes in KU stowage box (1) with radio compartment installation holes.

b. Install four machine screws (2), lock washers (3) and flat washers (4) in KU stowage box (1) bottom plate using a No. 2 cross-tip screwdriver.

c. Secure VAA in original mounting position IAW TM 11-5820-890-10-8.

d. Stow keyboard if necessary and secure nylon (loop and hook) fastener (5, 6).

e. Perform Functional Check IAW paragraph D–6.1.

D–6.13 REMOVE/REPLACE KEYBOARD STOWAGE BOX FASTENER TAPE

Refer to Figure D-12.

D–6.13.1 REMOVE KEYBOARD STOWAGE BOX FASTENER TAPE

a. Unfasten nylon fastener (hook) (5) and remove keyboard from KU stowage box if stowed.

b. Remove nylon fastener from slot in keyboard stowage box top plate. Cut material if necessary.

c. Remove nylon fastener (loop) (6) from wall adjacent to keyboard stowage box. Use scraper if necessary.

D–6.13.2 REPLACE KEYBOARD STOWAGE BOX FASTENER TAPE

a. Cut nylon fastener (hook) (5) material the same length as original.

b. Install fastener through slot in keyboard stowage box.

c. Fold nylon material back on itself the same as the original and secure with adhesive.

d. Cut nylon fastener (loop) (6) material same size as original.

e. Secure fastener material to wall in original position adjacent to keyboard stowage box with adhesive.

f. Stow keyboard in KU stowage box if necessary and secure nylon fastener (hook) (5) to nylon fastener (loop) (6).

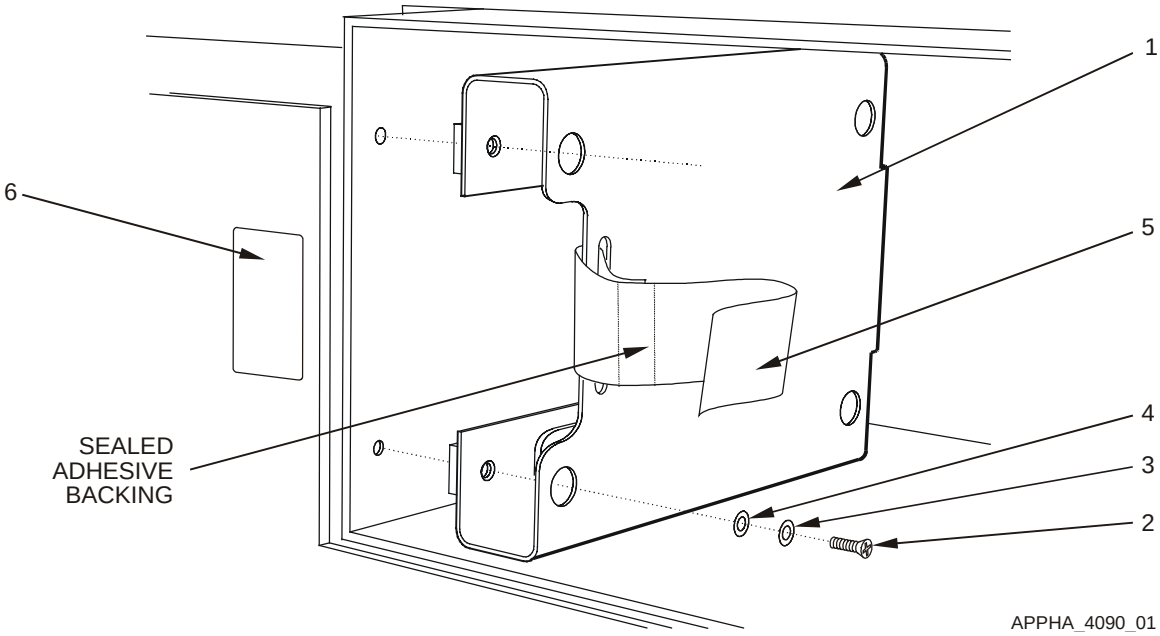

Figure D-12. Remove and Replace Keyboard Stowage Box

Key and Parts List for Figure D-12

ITEM NO.	NOMENCLATURE	CAGE CODE	PART NUMBER	NSN	QTY	SMR
1	Box, KU Stowage	80212	4250242		1	PAODD
2	Screw, Machine	96906	MS35206-344	5305-00-549-8246	4	PAOZZ
3	Washer, Lock	96906	MS35333-40	5310-00-550-1130	4	PAOZZ
4	Washer, Flat	96906	MS27183-10	5310-00-809-4058	4	PAOZZ
5	Fastener Tape, Nylon	39428	9489K421 (Hook)		A/R	PAOZZ
6	Fastener Tape Nylon	39428	9489K431 (Loop)		A/R	PAOZZ
--	Grip, Handle Assembly	0J198	861867-1		1	XBOOO
--	Grip, Handle	0J198	861869-1		1	XBOZZ
--	Screw, Machine	96906	MS35206-228	5305-00-984-4988	4	PAOZZ
--	Washer, Lock	96906	MS35338-41	5310-00-045-4007	4	PAOZZ
--	Tape, Shielding, Elect	39428	7648A34		A/R	XBOZZ

This page intentionally left blank.

APPENDIX E

SUPPLEMENTARY INFORMATION FOR

M60 AVLB/M

TABLE OF CONTENTS

Page
E–1 GENERAL E–3
E–2 COMPONENT ITEM NUMBERS AND PART NUMBERS E–3
E–3 SYSTEM INTERFACES E–3
E–3.1 MECHANICAL E–3
E–3.2 CABLE INTERFACES E–4
E–4 COMPONENT LOCATION E–6
E–4.1 GENERAL LOCATION E–6
E–4.2 MOUNTING E–7
E–5 PLATFORM-UNIQUE TROUBLESHOOTING E–10
E–6 REMOVAL/REPLACEMENT IN THE PLATFORM E–10
E–6.1 FUNCTIONAL CHECK E–10
E–6.2 REMOVE/REPLACE W1 POWER CABLE E–11
E–6.3 REMOVE/REPLACE W2 DISPLAY CABLE E–12
E–6.4 REMOVE/REPLACE W3 SERIAL INTERFACE ADAPTER DEVICE (SIAD) E–13
E–6.5 REMOVE/REPLACE W3P PLGR CABLE E–14
E–6.6 REMOVE/REPLACE W3N INC CABLE E–15
E–6.7 REMOVE/REPLACE W4 AUDIO CABLE E–16
E–6.8 REMOVE/REPLACE PU ISOLATION ASSEMBLY E–18
E–6.9 REMOVE/REPLACE DU ISOLATION ASSEMBLY E–21
E–6.10 REMOVE/REPLACE RAM-BALL ASSEMBLY E–24
E–6.11 REMOVE/REPLACE KEYBOARD UNIT (KU) STOWAGE BOX E–27
E–6.12 REMOVE/REPLACE KEYBOARD UNIT (KU) STOWAGE BOX DOOR LATCHES E–30

LIST OF ILLUSTRATIONS

Page
Figure E-1. Equipment Interface Block Diagram E–5
Figure E-2. Relative Component Locations E–6
Figure E-3. Display Unit (DU) Mounting Top-Down View E–7
Figure E-4. PLGR Mounting Top-Down View E–8
Figure E-5. Keyboard Stowage Box Mounting Top-Down View E–8
Figure E-6. Processor Unit (PU) Mounting Top-Down View E–9
Figure E-7. Cable Run E–17
Figure E-8. Remove and Replace PU Isolation Assembly E–20
Figure E-9. Remove and Replace DU Isolation Assembly E–23
Figure E-10. Remove and Replace RAM-Ball Assembly E–26
Figure E-11. Remove and Replace Keyboard Unit (KU) Stowage Box E–28
Figure E-12. Remove and Replace Keyboard Unit (KU) Stowage Box Latch E–31

E–1 GENERAL

This appendix describes the interfaces between the FBCB2 equipment and the M60 AVLB/M (Armored-Vehicle-Launcher Bridge/Mine). This appendix also identifies the component parts of the AVLB/M platform installation kit and details the removal and replacement procedures particular to the M60 AVLB/M.

NOTE

This appendix addresses the parts and installation configuration currently designed for the M60 AVLB/M. Some AVLB/M platforms utilize parts available at the time of installation and therefore do not match the original design configuration.

E–2 COMPONENT ITEM NUMBERS AND PART NUMBERS

Key and Parts List tables contained in the Removal and Replacement section of this Appendix serve a dual purpose. Use the Item Numbers in the Key to identify components and attaching hardware shown in the Figures illustrating the tasks. The nomenclature and part number for the hardware and equipment mounting components of the installation kit also are keyed to the Item Numbers in the tables. Additional parts ordering information, such as Contractor and Government Entity code (CAGE); National Stock Number (NSN); quantity; and Source, Maintenance and Recoverability (SMR) codes, are provided. The Key and Parts List follow the task illustrations.

E–3 SYSTEM INTERFACES

E–3.1 MECHANICAL

The mechanical hardware-to-hardware interfaces include:

a. Cables

b. Processor Unit (PU)

c. Display Unit (DU)

d. Keyboard Unit (KU)

E–3.2 CABLE INTERFACES

Figure E-1 illustrates a block diagram of the interface between the FBCB2 equipment and the M60 AVLB/M (Platform). Figure E-1 also illustrates the signal and control interfaces along with the terminal connector labels (e.g., P1, P2). The purpose of each cable is listed below:

Cable Name	Purpose
W1–Cable	Supplies vehicle power (28 VDC) to the AN/UYK-128(V) computer and its subassemblies.
W2–Cable	Supplies power and signals to the Display Unit (DU) and Keyboard Unit (KU). Returns Man-Machine Interface (MMI) information from the KU to the Processor Unit (PU).
W3–Cable	The Serial Interface Adapter Device (SIAD) is a conduit assembly that breaks out each of the serial interface ports to a connector.
W3P–Cable	Collects position and time information from the PLGR.
W3N–Cable	Provides duplex communication between the PU, Internet Controller (INC) and radios.
W4–Cable	Connects audio signals from the PU to the Intercom system and Combat Vehicle Crew (CVC) Helmet.
W5–Cable	The Expansion Interface Adapter Device (EIAD) is connected to the Universal Serial Bus (USB) connector only when this vehicle is to be used in a Tactical Operations Center (TOC) setup. When used in this configuration, it is connected between the PU J5 connector and local router.
Ground Strap	Provides safety ground for the PU.
Ground Strap	Provides safety ground for the DU.

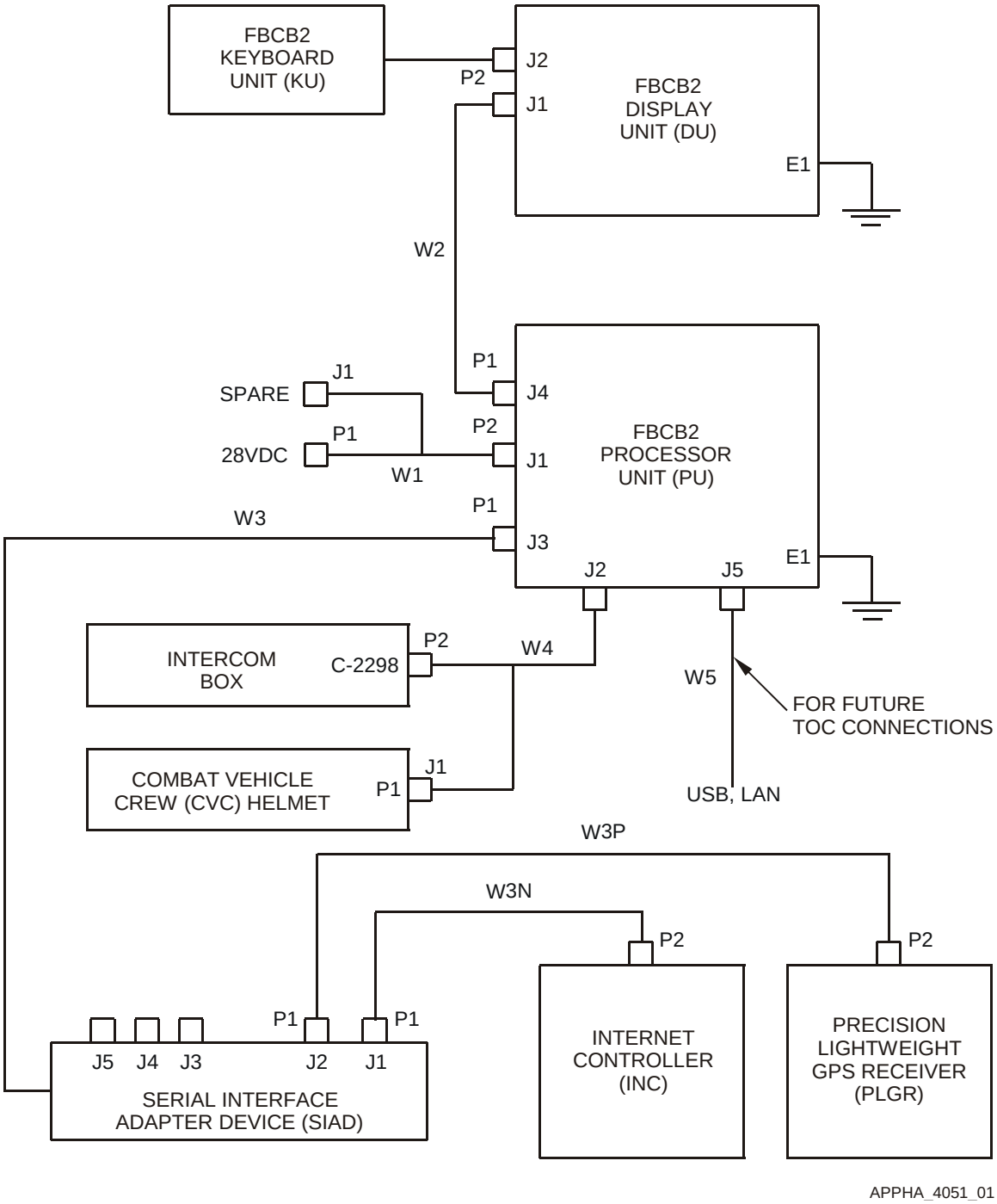

Figure E-1. Equipment Interface Block Diagram

E–4 COMPONENT LOCATION

E–4.1 GENERAL LOCATION

Figure E-2 shows the relative locations of the FBCB2 computer equipment and mounting components in the M60 AVLB/M platform. Figure E-2 also serves as the key for the following figures that show a more detailed view of how the equipment is mounted within the vehicle. Refer to the Key for figure cross reference.

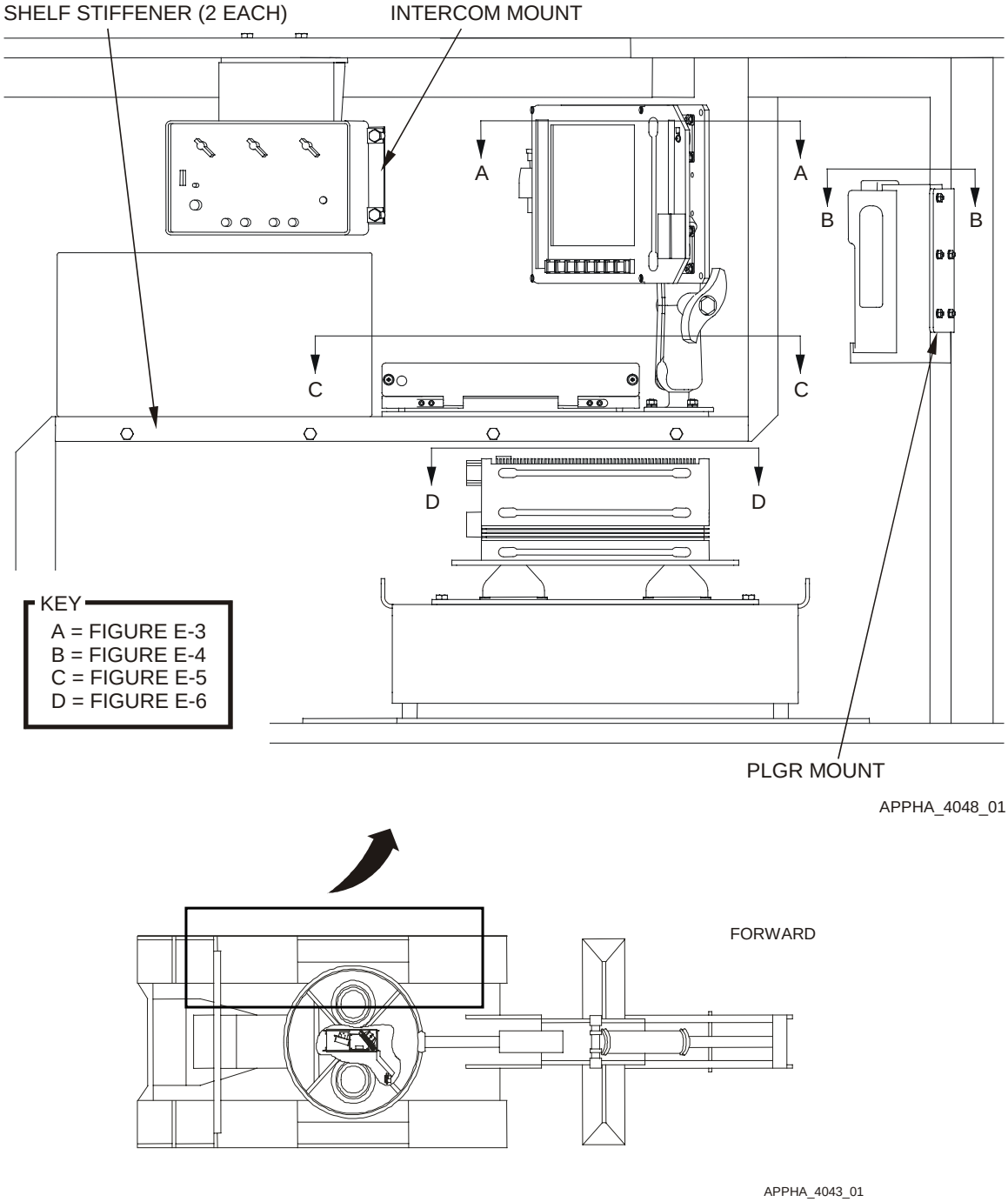

Figure E-2. Relative Component Locations

E–4.2 MOUNTING

E–4.2.1 DISPLAY UNIT MOUNTING

Figure E-3 illustrates a top-down view of the Display Unit (DU) mounting.

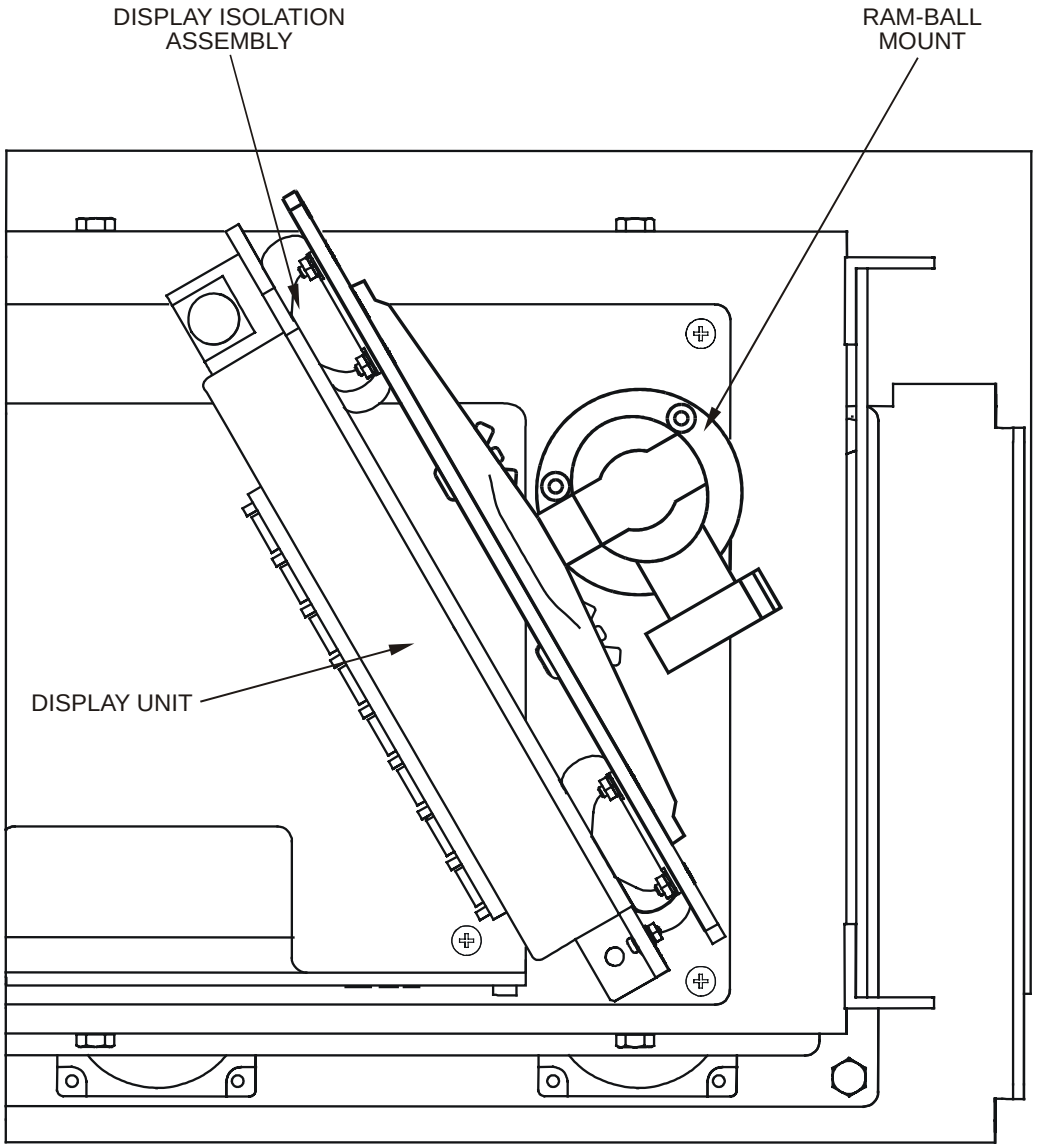

Figure E-3. Display Unit (DU) Mounting Top-Down View

E–4.2.2 PLGR AND KEYBOARD STOWAGE BOX MOUNTING

Figure E-4 illustrates a top-down view of the PLGR mounting. Figure E-5 illustrates a top-down view of the Keyboard stowage box mounting.

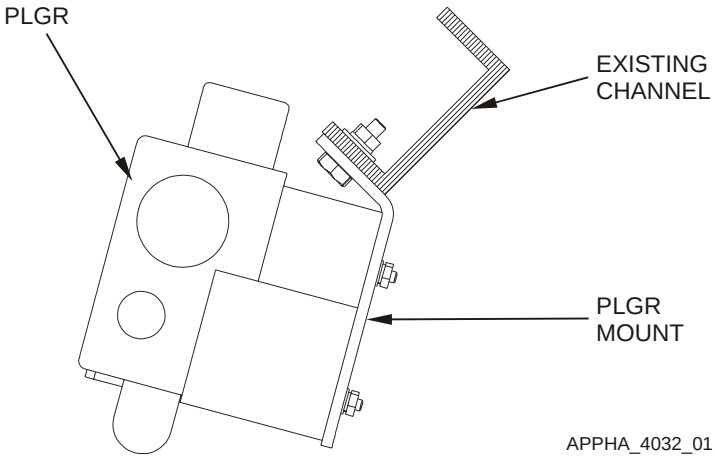

Figure E-4. PLGR Mounting Top-Down View

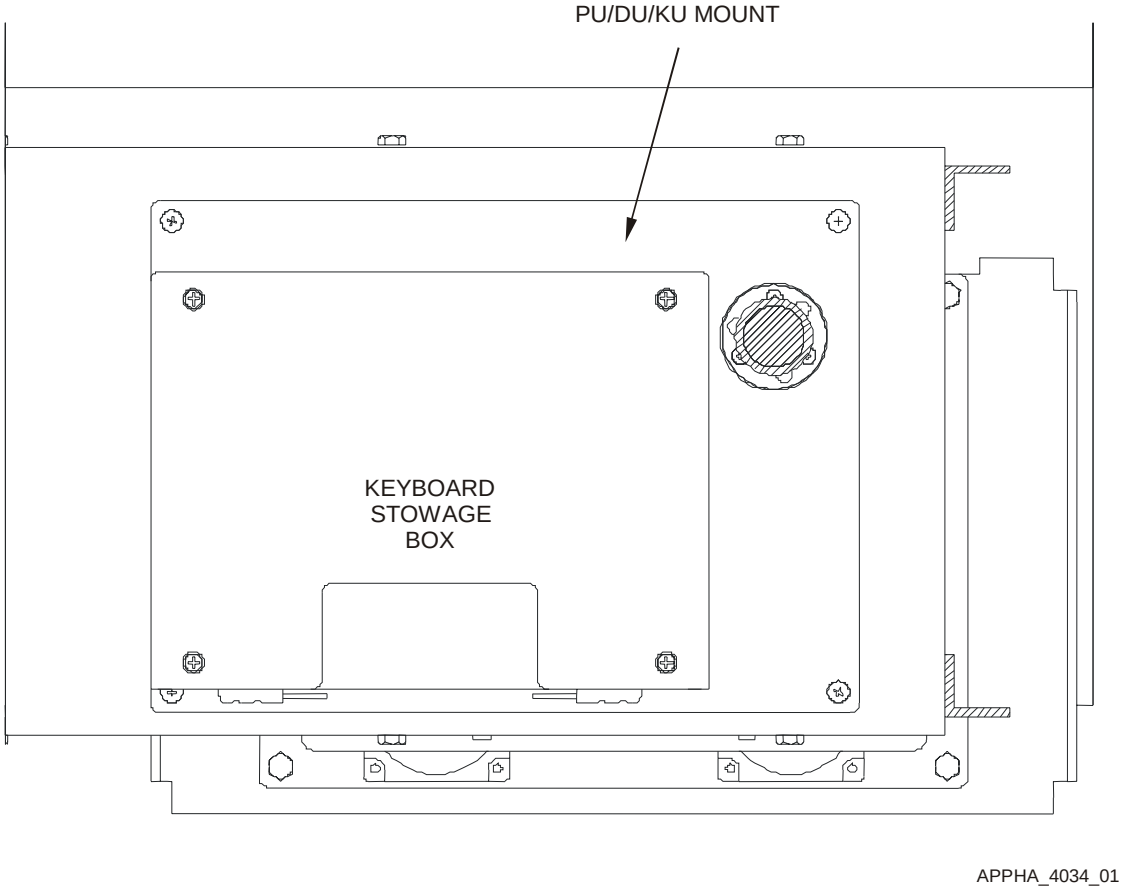

Figure E-5. Keyboard Stowage Box Mounting Top-Down View

E–4.2.3 PU MOUNTING

Figure E-6 illustrates a top-down view of the PU mounting.

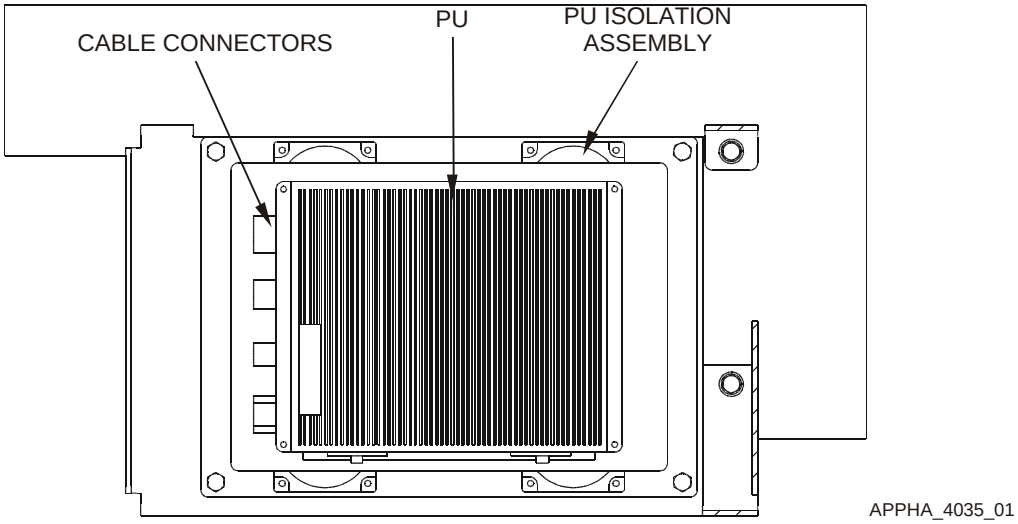

Figure E-6. Processor Unit (PU) Mounting Top-Down View

Key and Parts List for Mounting Hardware

ITEM NO.	NOMENCLATURE	CAGE CODE	PART NUMBER	NSN	QTY	SMR
--	Bracket, Mounting PLGR	0J198	866021-1		1	PAOZZ
--	Screw, Machine	96906	MS35207-267	5305-00-993-1851	5	PAOZZ
--	Washer, Flat	96906	MS27183-8	5310-00-809-8546	5	PAOZZ
--	Washer, Lock	96906	MS35338-43	5310-00-045-3296	5	PAOZZ
--	Nut, Plain, Hexagon	96906	MS35650-302	5310-00-934-9751	5	PAOZZ
--	Screw, Cap, Hexagon	80204	B1821AH025C125N	5305-00-068-0509	2	PAOZZ
--	Washer, Flat	96906	MS27183-10	5310-00-809-4058	2	PAOZZ
--	Washer, Lock	96906	MS35338-44	5310-00-582-5965	2	PAOZZ
--	Nut, Plain, Hexagon	96906	MS35649-2252	5310-00-997-1888	2	PAOZZ
--	Bracket, Mount Intercom	0J198	866022-1		1	PAOZZ
--	Screw, Cap, Hexagon	80204	B1821AH050C225N	5305-01-459-3112	4	PAOZZ
--	Screw, Machine	96906	MS35190-292	5305-00-990-1347	4	PAOZZ
--	Washer, Flat	96906	MS27183-10	5310-00-809-4058	4	PAOZZ
--	Washer, Lock	96906	MS35338-44	5310-00-582-5965	4	PAOZZ
--	Nut, Plain, Hexagon	96906	MS35649-2252	5310-00-997-1888	4	PAOZZ
--	Bracket, Shelf	0J198	866024-1		2	XBOZZ
--	Screw, Cap Hexagon	80204	B1821AH025C150N	5305-01-466-7243	8	PAOZZ
--	Washer, Flat	96906	MS27183-10	5310-00-809-4058	8	PAOZZ
--	Washer, Lock	96906	MS35338-44	5310-00-582-5965	8	PAOZZ
--	Nut, Plain, Hexagon	96906	MS35649-2252	5310-00-997-1888	8	PAOZZ
--	Strap, 6’ Tie Down	39428	8842T17		1	PAOZZ

E–5 PLATFORM-UNIQUE TROUBLESHOOTING

There are no unique troubleshooting procedures for this vehicle.

E–6 REMOVAL/REPLACEMENT IN THE PLATFORM

Most installations must be tailored to the platform. Cables and brackets are unique to the installation. Before a part or assembly is removed from a vehicle, fill out a “Maintenance Request” DA Form 2407. One copy of this completed form must remain with the vehicle and the remaining copies must be kept with the failed component. To prove the operability of the system after an item is replaced, perform the system Functional Check.

E–6.1 FUNCTIONAL CHECK

E–6.1.1 POWER UP

Power up and initialize all interface equipment and the AN/UYK-128(V) In Accordance With (IAW) Operator’s Manual TM 11-7010-326-10, or Pocket Guide TB 11-7010-326-10.

E–6.1.2 VERIFICATION

NOTE

Observe that the Display Unit PWR, DISP and CPU green LED lights are lit.

a. Observe that the PLGR synchronizes with PU, indicated by the PLGR dialog box showing green.

b. Observe that the Router synchronizes with the PU, indicated by the Router dialog box showing green.

c. At the Session Manager screen, select OPS button to display the OPS screen.

d. Verify the GPS status is either green or amber on the Classification/Status Bar.

e. Verify the Communications status is either green or amber on the Classification/Status Bar.

E–6.1.3 POWER DOWN

Power down all interface equipment and the AN/UYK-128(V) IAW the Operator’s Manual TM 11-7010-326-10, or Pocket Guide TB 11-7010-326-10.

E–6.2 REMOVE/REPLACE W1 POWER CABLE

Refer to Figure E-7.

E–6.2.1 REMOVE W1 POWER CABLE

WARNING

Before conducting maintenance involving the removal and replacement of system components, ensure that all power to the FBCB2 system is off (including power from the vehicle). Failure to comply with warning may result in equipment damage or injury to personnel.

a. Power down AN/UYK-128(V) system IAW Operator's Manual TM 11-7010-326-10, or Pocket Guide TB 11-7010-326-10.

b. Power down SINCGARS IAW TM 5820-890-10-8.

c. Unlatch and slide the Vehicle Amplifier-Adapter (VAA) forward from SINCGARS Mounting Base (MB) to allow access to W1 cable connector IAW TM 11-5820-890-10-8.

d. Disconnect W1-P1 cable connector from the SINCGARS Mounting Base (MB) (MT-6352A/VRC) A4-J2 connector.

e. Disconnect W1-P2 cable connector from PU J1 connector.

f. Install protective cap on PU J1 connector.

NOTE

Note cable routing and tie-wrap locations before removing cable or tie-wraps.

g. Remove tie-wraps securing W1 cable using diagonal wire cutters.

h. Remove W1 power cable (3).

E–6.2.2 REPLACE W1 POWER CABLE

a. Route W1 power cable (3).

b. Remove protective cap from PU J1 connector.

c. Connect W1-P2 cable connector to PU J1 connector.

d. Connect W1-P1 cable connector to SINCGARS Mounting Base (MB) (MT-6352A/VRC) A4-J2 connector.

e. Secure VAA in original mounting position IAW TM 11-5820-890-10-8.

f. Secure W1 cable using tie-wraps, as applicable.

g. Dress tie-wraps using diagonal wire cutters.

h. Perform Functional Check IAW paragraph E–6.1.

E–6.3 REMOVE/REPLACE W2 DISPLAY CABLE

Refer to Figure E-7.

E–6.3.1 REMOVE W2 DISPLAY CABLE

WARNING

Before conducting maintenance involving the removal and replacement of system components, ensure that all power to the FBCB2 system is off (including power from the vehicle). Failure to comply with warning may result in equipment damage or injury to personnel.

a. Power down AN/UYK-128(V) system IAW Operator's Manual TM 11-7010-326-10, or Pocket Guide TB 11-7010-326-10.

b. Disconnect W2-P1 cable connector from PU J4 connector.

c. Install protective cap on PU J4 connector.

d. Disconnect W2-P2 cable connector from display J1 connector.

e. Install protective cap on display J1 connector.

NOTE

Note cable routing and tie-wrap locations before removing cable or tie-wraps.

f. Remove tie-wraps securing W2 cable using diagonal wire cutters.

g. Remove W2 display cable (2).

E–6.3.2 REPLACE W2 DISPLAY CABLE

a. Route W2 display cable (2).

b. Remove protective cap from display J1 connector.

c. Connect W2-P2 cable connector to display J1 connector.

d. Remove protective cap from PU J4 connector.

e. Connect W2-P1 cable connector to PU J4 connector.

f. Secure W2 cable using tie-wraps.

g. Dress tie-wraps using diagonal wire cutters.

h. Perform Functional Check IAW paragraph E–6.1.

E–6.4 REMOVE/REPLACE W3 SERIAL INTERFACE ADAPTER DEVICE (SIAD)

Refer to Figure E-7.

E–6.4.1 REMOVE W3 SERIAL INTERFACE ADAPTER DEVICE (SIAD)

WARNING

Before conducting maintenance involving the removal and replacement of system components, ensure that all power to the FBCB2 system is off (including power from the vehicle). Failure to comply with warning may result in equipment damage or injury to personnel.

a. Power down AN/UYK-128(V) system IAW Operator's Manual TM 11-7010-326-10, or Pocket Guide TB 11-7010-326-10.

b. Disconnect W3N-P1 cable connector from W3 SIAD J1 connector.

c. Disconnect W3P-P1 cable connector from W3 SIAD J2 connector.

d. Disconnect W3 SIAD-P1 cable connector from PU J3 connector.

e. Install protective cap on PU J3 connector.

NOTE

Note the cable routing and tie-wrap locations before removing cable or tie-wraps.

f. Remove tie-wraps securing W3 SIAD using diagonal wire cutters.

g. Remove W3 SIAD (5).

E–6.4.2 REPLACE W3 SERIAL INTERFACE ADAPTER DEVICE (SIAD)

a. Route W3 SIAD (5) into original position.

b. Remove protective cap from PU J3 connector.

c. Connect W3 SIAD-P1 cable connector to PU J3 connector.

d. Connect W3P-P1 cable connector to W3 SIAD J2 connector.

e. Connect W3N-P1 cable connector to W3 SIAD J1 connector.

f. Secure W3 SIAD using tie-wraps.

g. Dress tie-wraps using diagonal wire cutters.

h. Perform Functional Check IAW paragraph E–6.1.

E–6.5 REMOVE/REPLACE W3P PLGR CABLE

Refer to Figure E-7.

E–6.5.1 REMOVE W3P PLGR CABLE

WARNING

Before conducting maintenance involving the removal and replacement of system components, ensure that all power to the FBCB2 system is off (including power from the vehicle). Failure to comply with warning may result in equipment damage or injury to personnel.

a. Power down AN/UYK-128(V) system IAW Operator's Manual TM 11-7010-326-10, or Pocket Guide TB 11-7010-326-10.

b. Disconnect W3P-P1 cable connector from W3 SIAD J2 connector.

c. Remover PLGR from mounting rack.

d. Disconnect W3P-P2 cable connector from PLGR J2 connector using an offset flat screwdriver.

NOTE

Note cable routing and tie-wrap locations before removing cable or tie-wraps.

e. Remove tie-wraps securing W3P cable using diagonal wire cutters.

f. Remove W3P cable (1).

E–6.5.2 REPLACE W3P PLGR CABLE

a. Route W3P cable (1).

b. Connect W3P-P2 cable connector to PLGR J2 connector using an offset flat screwdriver.

c. Install PLGR into mounting rack.

d. Connect W3P-P1 cable connector to W3 SIAD J2 connector.

e. Secure W3P cable using tie-wraps.

f. Dress tie-wraps using diagonal wire cutters.

g. Perform Functional Check IAW paragraph E–6.1.

E–6.6 REMOVE/REPLACE W3N INC CABLE

Refer to Figure E-7.

E–6.6.1 REMOVE W3N INC CABLE

WARNING

Before conducting maintenance involving the removal and replacement of system components, ensure that all power to the FBCB2 system is off (including power from the vehicle). Failure to comply with warning may result in equipment damage or injury to personnel.

a. Power down AN/UYK-128(V) system IAW Operator's Manual TM 11-7010-326-10, or Pocket Guide TB 11-7010-326-10.

b. Disconnect W3N-P1 cable connector from W3 SIAD J1 connector

c. Disconnect W3N-P2 cable connector from SINCGARS INC J6 connector.

NOTE

Note cable routing and tie-wrap locations before removing cable or tie-wraps.

d. Remove tie-wraps securing W3N cable using diagonal cutters.

e. Remove W3N cable (6).

E–6.6.2 REPLACE W3N INC CABLE

a. Route W3N cable (6).

b. Connect W3N-P2 cable connector to SINCGARS INC J6 connector.

c. Connect W3N-P1 cable connector to W3 SIAD J1 connector.

d. Secure W3N cable using tie-wraps.

e. Dress tie-wraps using diagonal wire cutters.

f. Perform Functional Check IAW paragraph E–6.1.

E–6.7 REMOVE/REPLACE W4 AUDIO CABLE

Refer to Figure E-7.

E–6.7.1 REMOVE W4 AUDIO CABLE

WARNING

Before conducting maintenance involving the removal and replacement of system components, ensure that all power to the FBCB2 system is off (including power from the vehicle). Failure to comply with warning may result in equipment damage or injury to personnel.

a. Power down AN/UYK-128(V) system IAW Operator's Manual TM 11-7010-326-10, or Pocket Guide TB 11-7010-326-10.

b. Disconnect W4-P1 cable connector from PU J2 connector.

c. Install protective cap on PU J2 connector.

d. Disconnect W4-P2 cable connector from Intercom Box C-2298 connector.

e. Disconnect W4-J1 cable connector from Combat Vehicle Crew (CVC) helmet P1 connector.

NOTE

Note cable routing and tie-wrap locations before removing cable or tie-wraps.

f. Remove tie-wraps securing W4 cable using diagonal wire cutters.

g. Remove W4 audio cable (4).

E–6.7.2 REPLACE W4 AUDIO CABLE

a. Route W4 audio cable (4).

b. Connect W4-J1 cable connector to CVC helmet P1 connector.

c. Connect W4-P2 cable connector to Intercom Box C-2298 connector.

d. Remove protective cap from PU J2 connector.

e. Connect W4-P1 cable connector to PU J2 connector.

f. Secure W4 cable using tie-wraps.

g. Dress tie-wraps using diagonal wire cutters.

h. Perform Functional Check IAW paragraph E–6.1.

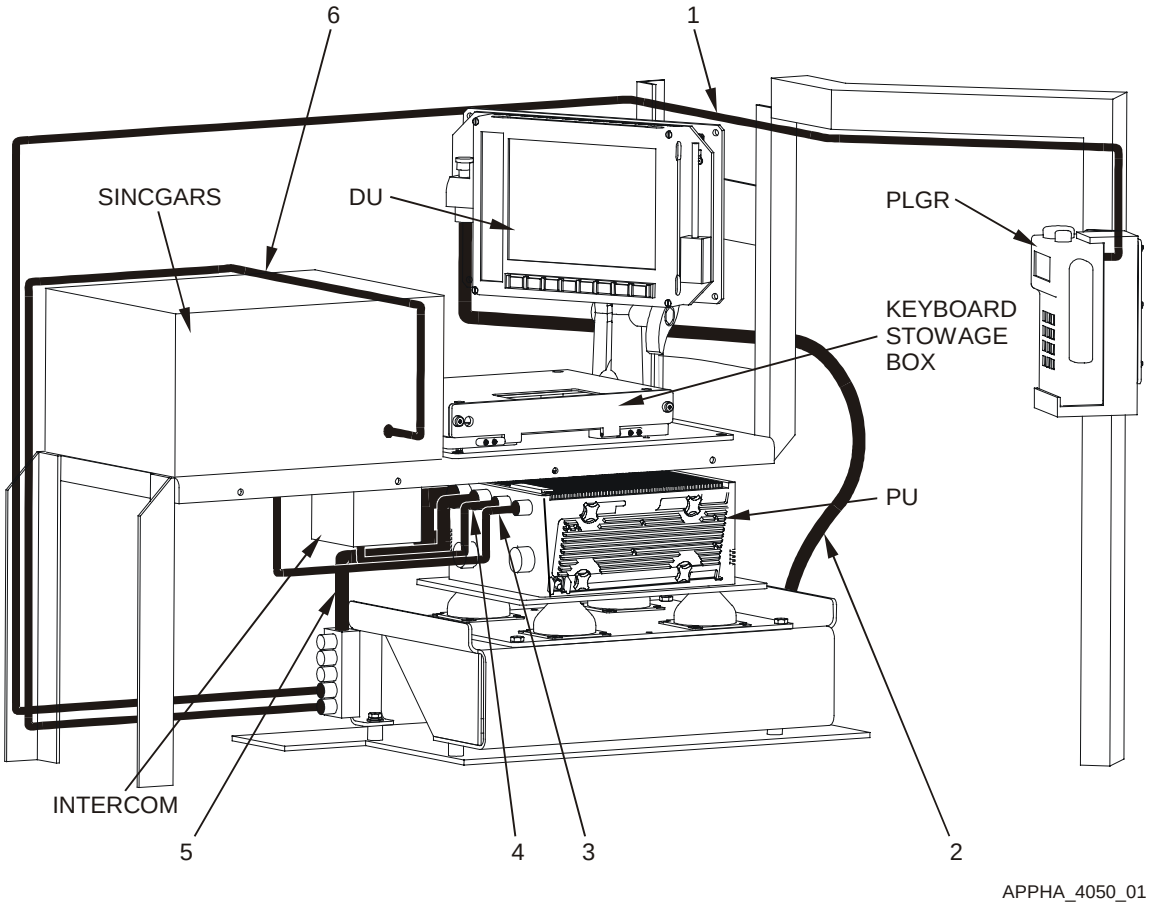

Figure E-7. Cable Run

Key and Parts List for Figure E-7

ITEM NO.	NOMENCLATURE	CAGE CODE	PART NUMBER	NSN	QTY	SMR
1	Cable Assembly W3P	0J198	881335-3	5995-01-478-4898	1	PAODD
2	Cable Assembly W2	0J198	881327-2	5995-01-478-4873	1	PAODD
3	Cable Assembly W1	0J198	861880-2	5995-01-478-4947	1	PAODD
4	Cable Assembly W4	0J198	881270-2	5995-01-478-4928	1	PAODD
5	Adapter Assy SIAD W3	0J198	881331-1	4920-01-478-3722	1	PAODD
6	Cable Assembly W3N	0J198	881336-1	5995-01-478-4913	1	PAODD
--	Strap, Tie Down, Elect	39428	7130K31		50	PAOZZ
--	Holder, Cable, Tie 2way	39428	7566K27		25	PAOZZ

E–6.8 REMOVE/REPLACE PU ISOLATION ASSEMBLY

Refer to Figure E-8.

NOTE

Ground straps are attached to components at one end (PU and DU) and a frame ground at the other end. Regardless of where the ground strap terminates, it is usually a burnished (void of paint) area. If the ground strap is removed from a burnished area, make sure to return it to the same burnished area. Where applicable, always connect the ground strap first when assembling, and disconnect the ground strap last when disassembling.

E–6.8.1 REMOVE PU ISOLATION ASSEMBLY

WARNING

Before conducting maintenance involving the removal and replacement of system components, ensure that all power to the FBCB2 system is off (including power from the vehicle). Failure to comply with warning may result in equipment damage or injury to personnel.

a. Power down AN/UYK-128(V) system IAW Operator's Manual TM 11-7010-326-10, or Pocket Guide TB 11-7010-326-10.

NOTE

Do not remove the Removable Hard Disk Drive Cartridge (RHDDC) from PU.

b. Remove PU IAW Unit Maintenance Manual TM 11-7010-326-20&P, Chapter 2.

c. Remove one hex head screw (1), ground strap, flat washer (2), lock washer (3) and hex nut (4) from PU isolation assembly (6) bottom plate and PU mounting bracket (5) using a 7/16" socket with ratchet, 3" extension and 7/16" open-end wrench.

d. Remove remaining three hex head screws (1), flat washers (2), lock washers (3) and hex nuts (4) from PU isolation assembly (6) bottom plate and PU mounting bracket (5) using a 7/16" socket with ratchet, 3" extension and 7/16" open-end wrench.

e. Remove PU isolation assembly (6) from PU mounting bracket (5).

E–6.8.2 REPLACE PU ISOLATION ASSEMBLY

a. Align four PU isolation assembly (6) bottom plate holes with installation holes in PU mounting bracket (5).

NOTE

To ensure positive ground, PU ground strap must make direct contact with bare metal. Ensure PU ground strap is installed in its original location at the PU isolation assembly bottom plate mounting hole. Slip the ground strap, flat washer and lock washer on the mounting screw before installing and tightening nut.

b. Install one hex head screw (1), ground strap, flat washer (2), lock washer (3) and hex nut (4) on PU isolation assembly (6) bottom plate and PU mounting bracket (5) using a 7/16” socket with ratchet, 3” extension and 7/16” open-end wrench.

c. Install remaining three hex head screws (1), flat washers (2), lock washers (3) and hex nuts (4) on PU isolation assembly (6) bottom plate and PU mounting bracket (5) using a 7/16" socket with ratchet, 3" extension and 7/16" open-end wrench.

d. Replace PU IAW Unit Maintenance Manual TM 11-7010-326-20&P, Chapter 2.

e. Perform Functional Check IAW paragraph E–6.1.

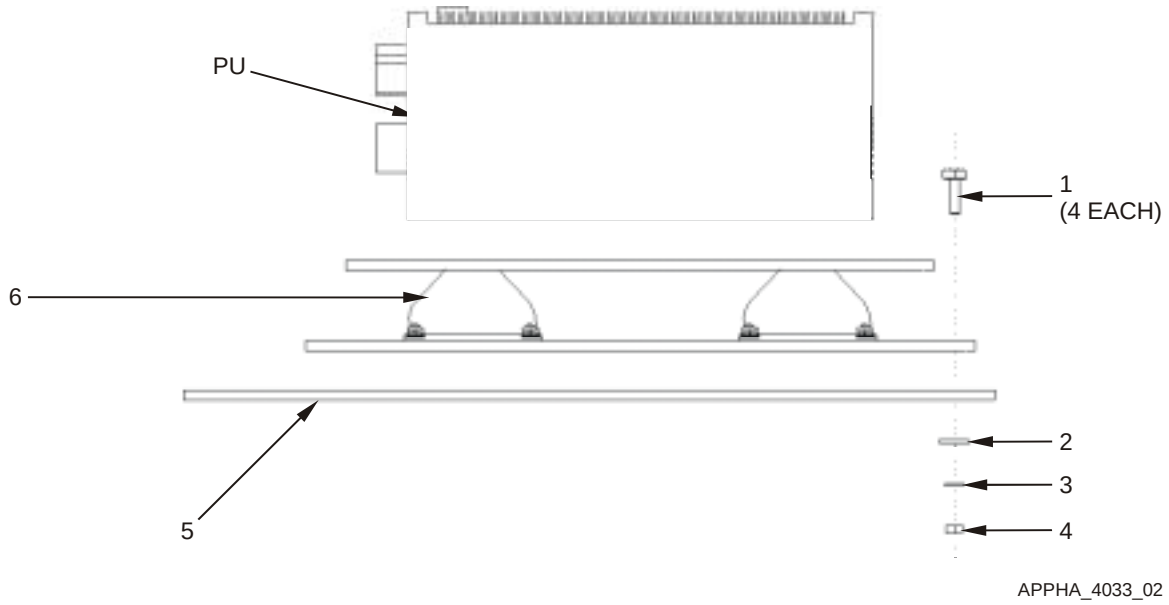

Figure E-8. Remove and Replace PU Isolation Assembly

Key and Parts List for Figure E-8

ITEM NO.	NOMENCLATURE	CAGE CODE	PART NUMBER	NSN	QTY	SMR
1	Screw, Cap, Hexagon	80204	B1821AH025C125N	5305-00-068-0509	6	PAOZZ
2	Washer, Flat	96906	MS27183-10	5310-00-809-4058	34	PAOZZ
3	Washer, Lock	96906	MS35338-44	5310-00-582-5965	34	PAOZZ
4	Nut, Plain, Hexagon	96906	MS35649-2252	5310-00-997-1888	30	PAOZZ
5	(PU mounting bracket) Bracket, Mount PU	0J198	866023-1		1	PAOZZ
6	(PU isolation assembly) Plate, Resilient Mount PU	0J198	872826-1	5340-01-481-5742	1	PAODD
--	Screw, Cap, Hexagon	80204	B1821AH038C088N	5305-01-389-9088	4	PAOZZ
--	Washer, Lock	96906	MS35338-46	5310-00-637-9541	4	PAOZZ
--	Washer, Flat	96906	MS27183-14	5310-00-080-6004	4	PAOZZ
--	Assembly, PU Lock	0J198	861865-1		1	XBOOO
--	Bracket, Locking	0J198	861871-1		1	XBOZZ
--	Screw	80205	MS35190-253	5305-00-059-4568	2	PAOZZ

E–6.9 REMOVE/REPLACE DU ISOLATION ASSEMBLY

Refer to Figure E-9.

NOTE

Ground straps are attached to components at one end (PU and DU) and a frame ground at the other end. Regardless of where the ground strap terminates, it is usually a burnished (void of paint) area. If the ground strap is removed from a burnished area, make sure to return it to the same burnished area. Where applicable, always connect the ground strap first when assembling, and disconnect the ground strap last when disassembling.

E–6.9.1 REMOVE DU ISOLATION ASSEMBLY

WARNING

Before conducting maintenance involving the removal and replacement of system components, ensure that all power to the FBCB2 system is off (including power from the vehicle). Failure to comply with warning may result in equipment damage or injury to personnel.

a. Power down AN/UYK-128(V) system IAW Operator's Manual TM 11-7010-326-10, or Pocket Guide TB 11-7010-326-10.

b. Remove DU IAW Unit Maintenance Manual TM 11-7010-326-20&P, Chapter 2.

NOTE

Note cable routing and tie-wrap locations before removing cable or tie-wraps.

c. Remove tie-wraps securing W2 display cable and ground strap to DU isolation assembly using diagonal wire cutters.

d. Loosen RAM-Ball knob while supporting DU isolation assembly (1) until RAM-Ball display base with ball can be lifted free from RAM-Ball socket arm.

e. Remove four self-locking wing nuts (2), spacers (3) and square neck bolts (4) from RAM-Ball display base with ball and DU isolation assembly (1) bottom plate.

f. Remove DU isolation assembly (1) from RAM-Ball display base with ball.

E–6.9.2 REPLACE DU ISOLATION ASSEMBLY

a. Align four RAM-Ball display base with ball holes with slots in DU isolation assembly (1) bottom plate.

b. Install four square neck bolts (4), spacers (3) and self-locking wing nuts (2), on RAM-Ball display base with ball and DU isolation assembly (1) bottom plate.

CAUTION

Ensure RAM-Ball is free of dirt and contaminants before reassembling. Failure to comply can result in slippage or excess wear of RAM-Ball assembly.

c. Inspect and clean RAM-Ball socket arm and display base with ball, as necessary, using a clean lint-free wipes.

d. Insert RAM-Ball display base with ball into RAM-Ball socket arm.

e. Adjust viewing angle and tighten RAM-Ball knob.

f. Secure W2 display cable and ground strap to DU isolation assembly (1) bottom plate using tie-wraps.

g. Dress tie-wraps using diagonal wire cutters.

h. Install DU IAW Unit Maintenance Manual TM 11-7010-326-20&P, Chapter 2

i. Perform Functional Check IAW paragraph E–6.1.

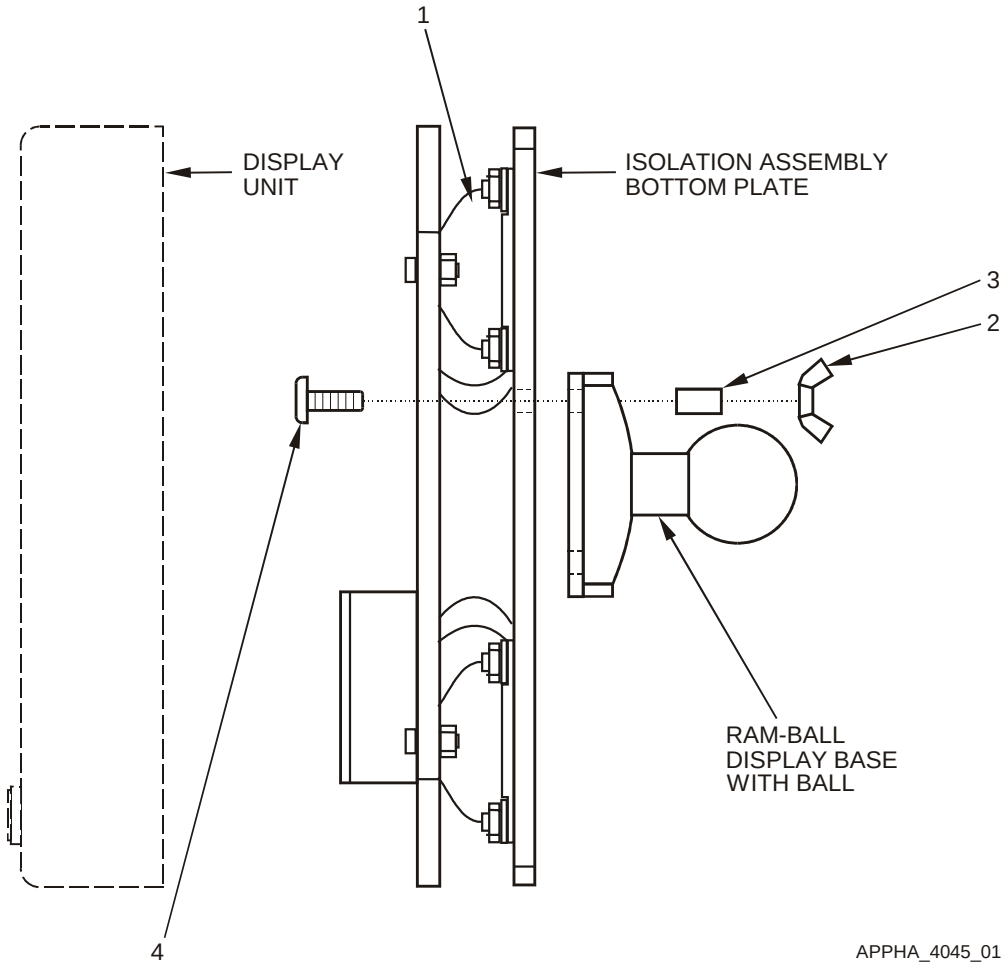

Figure E-9. Remove and Replace DU Isolation Assembly

Key and Parts List for Figure E-9

ITEM NO.	NOMENCLATURE	CAGE CODE	PART NUMBER	NSN	QTY	SMR
1	(DU isolation assembly) Plate, Resilient Mount DU	0J198	872870-1		1	PAODD
2	Nut, Self-Locking, Wing	96906	MS51553-420	5310-01-384-2546	4	PAOZZ
3	Spacer, Aluminum	57177	10705AL315C		4	PAOZZ
4	Bolt, Square Neck	96906	MS35751-17	5306-00-889-2943	4	PAOZZ
--	Assembly, DU Lock	0J198	872843-1		1	XBOOO
--	Bracket, Locking	0J198	861871-3		1	XBOZZ
--	Washer, Lock	96906	MS35338-42	5310-00-045-3299	2	PAOZZ
--	Screw	80205	MS35190-253	5305-00-059-4568	2	PAOZZ

E–6.10 REMOVE/REPLACE RAM-BALL ASSEMBLY

Refer to Figure E-10.

NOTE

Ground straps are attached to components at one end (PU and DU) and a frame ground at the other end. Regardless of where the ground strap terminates, it is usually a burnished (void of paint) area. If the ground strap is removed from a burnished area, make sure to return it to the same burnished area. Where applicable, always connect the ground strap first when assembling, and disconnect the ground strap last when disassembling.

E–6.10.1 REMOVE RAM-BALL ASSEMBLY

WARNING

Before conducting maintenance involving the removal and replacement of system components, ensure that all power to the FBCB2 system is off (including power from the vehicle). Failure to comply with warning may result in equipment damage or injury to personnel.

a. Power down AN/UYK-128(V) system IAW Operator's Manual TM 11-7010-326-10, or Pocket Guide TB 11-7010-326-10.

b. Remove DU IAW Unit Maintenance Manual TM 11-7010-326-20&P, Chapter 2.

NOTE

Note cable routing and tie-wrap locations before removing cable or tie-wraps.

c. Remove tie-wraps securing W2 display cable and ground strap to DU isolation assembly using diagonal wire cutters.

d. Loosen RAM-Ball knob while supporting DU isolation assembly until RAM-Ball display base with ball can be lifted free from RAM-Ball socket arm.

NOTE

Some AVLB/M platforms are equipped with small 1 1/2" RAM-Ball mounts. If so, attaching hardware will consist of four square neck bolts, flat washers, lock washers and self-locking wing nuts.

e. Remove four self-locking wing nuts (3), spacers (2) and square neck bolts (1) from RAM-Ball display base with ball and DU isolation assembly bottom plate.

f. Remove RAM-Ball display base with ball from DU isolation assembly.

g. Remove RAM-Ball socket arm from RAM-Ball mounting base with ball on PU/DU/KU mounting bracket (9).

h. Remove three machine screws (5), flat washers (6), lock washers (7) and hex nuts (8) from RAM-Ball mounting base with ball and PU/DU/KU mounting bracket (9) using a No. 2 cross-tip screwdriver and 7/16" open-end wrench.

i. Remove RAM-Ball mounting base with ball from PU/DU/KU mounting bracket (9).

E–6.10.2 REPLACE RAM-BALL ASSEMBLY

a. Align three holes in RAM-Ball mounting base with ball with PU/DU/KU mounting bracket installation holes.

b. Install three machine screws (5), flat washers (6), lock washers (7) and hex nuts (8) on RAM-Ball mounting base with ball and PU/DU/Ku mounting bracket (9) using a No. 2 cross-tip screwdriver and 7/16” open-end wrench.

CAUTION

Ensure RAM-Ball is free of dirt and contaminants before reassembling. Failure to comply can result in slippage or excess wear of RAM-Ball assembly.

c. Inspect and clean RAM-Ball socket arm, display and mounting base with ball, as necessary, using clean lint-free wipes.

d. Install RAM-Ball socket arm on RAM-Ball mounting base with ball on PU/DU/KU mounting bracket (9).

e. Align RAM-Ball display base with ball holes with slots in DU isolation assembly bottom plate.

f. Install four square neck bolts (1), spacers (2) and self-locking wing nuts (3) on RAM-Ball display base with ball and DU isolation assembly bottom plate.

g. Insert RAM-Ball display base with ball into RAM-Ball socket arm.

h. Adjust viewing angle and tighten RAM-Ball knob.

i. Install DU IAW Unit Maintenance Manual TM 11-7010-326-20&P, Chapter 2.

j. Secure W2 display cable and ground strap to DU isolation assembly using tie-wraps.

k. Dress tie-wraps using diagonal wire cutters.

l. Perform Functional Check IAW paragraph E–6.1.

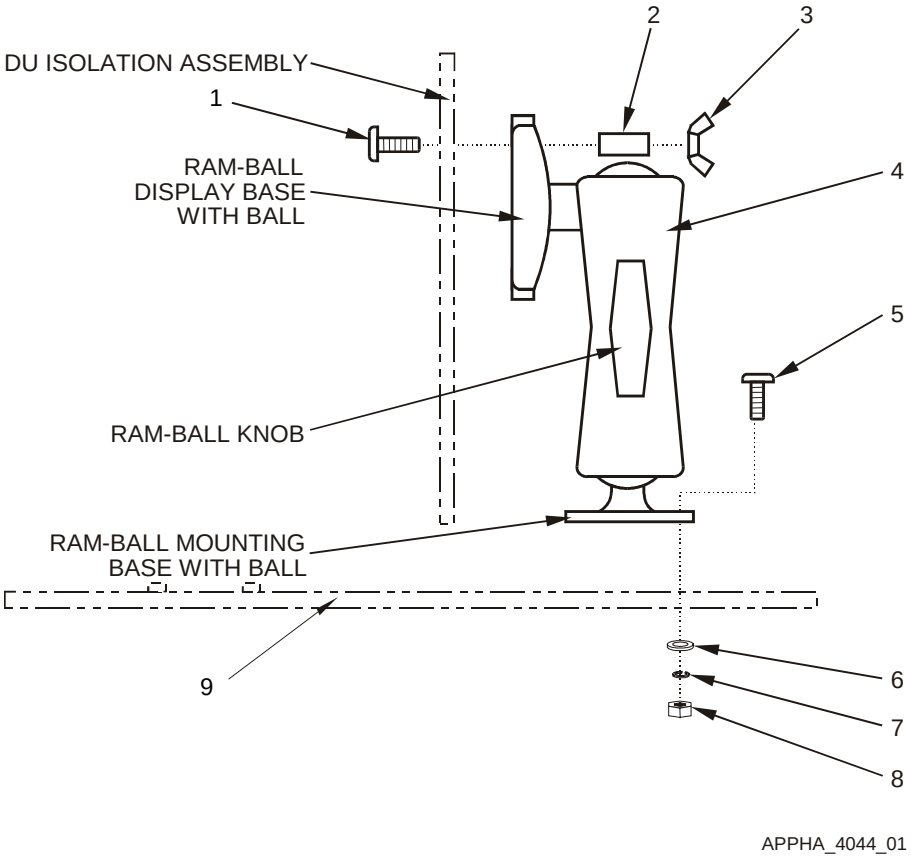

Figure E-10. Remove and Replace RAM-Ball Assembly

Key and Parts List for Figure E-10

ITEM NO.	NOMENCLATURE	CAGE CODE	PART NUMBER	NSN	QTY	SMR
1	Bolt, Square Neck	96906	MS35751-17	5306-00-889-2943	4	PAOZZ
2	Spacer, Aluminum	57177	10705AL315C		4	PAOZZ
3	Nut, Self-Locking, Wing	96906	MS51553-420	5310-01-384-2546	4	PAOZZ
4	Mount, RAM-Ball	0J198	889489-1		1	PAOZZ
5	Screw, Machine	96906	MS35190-290	5305-00-954-3937	7	PAOZZ
6	Washer, Flat	96906	MS27183-10	5310-00-809-4058	7	PAOZZ
7	Washer, Lock	96906	MS35338-44	5310-00-582-5965	7	PAOZZ
8	Nut, Plain, Hexagon	96906	MS35649-2252	5310-00-997-1888	7	PAOZZ
9	(PU/DU/KU mounting bracket) Bracket, PU/DU/KU	0J198	866020-1		1	PAOZZ

E–6.11 REMOVE/REPLACE KEYBOARD UNIT (KU) STOWAGE BOX

Refer to Figure E-11.

E–6.11.1 REMOVE KEYBOARD UNIT (KU) STOWAGE BOX

a. Loosen the RAM-Ball knob and remove the DU, DU isolation assembly and RAM-Ball display base with ball from RAM-Ball socket arm, while leaving cables in place.

b. Move the DU, DU isolation assembly and RAM-Ball display base with ball aside to allow access to the keyboard stowage box mounting screws.

c. Remove keyboard from stowage box, if stowed.

d. Loosen four KU stowage box captive screws (3) until the captive screws move freely using a No. 2 cross-tip screwdriver.

e. Remove KU stowage box (1) from PU/DU/KU mounting bracket (6).

E–6.11.2 REPLACE KEYBOARD UNIT (KU) STOWAGE BOX

a. Align four KU stowage box captive screws (3) with PU/DU/KU mounting bracket (6) installation holes.

b. Tighten four captive screws (3) using a No. 2 cross-tip screwdriver.

c. Stow keyboard, if necessary.

CAUTION

Ensure RAM-Ball is free of dirt and contaminants before reassembling. Failure to comply can result in slippage or excess wear of RAM-Ball assembly.

d. Inspect and clean RAM-Ball socket arm and display base with ball using clean lint-free wipes.

e. Replace DU, DU isolation assembly and RAM-Ball display base with ball on RAM-Ball socket arm and tighten RAM-Ball knob.

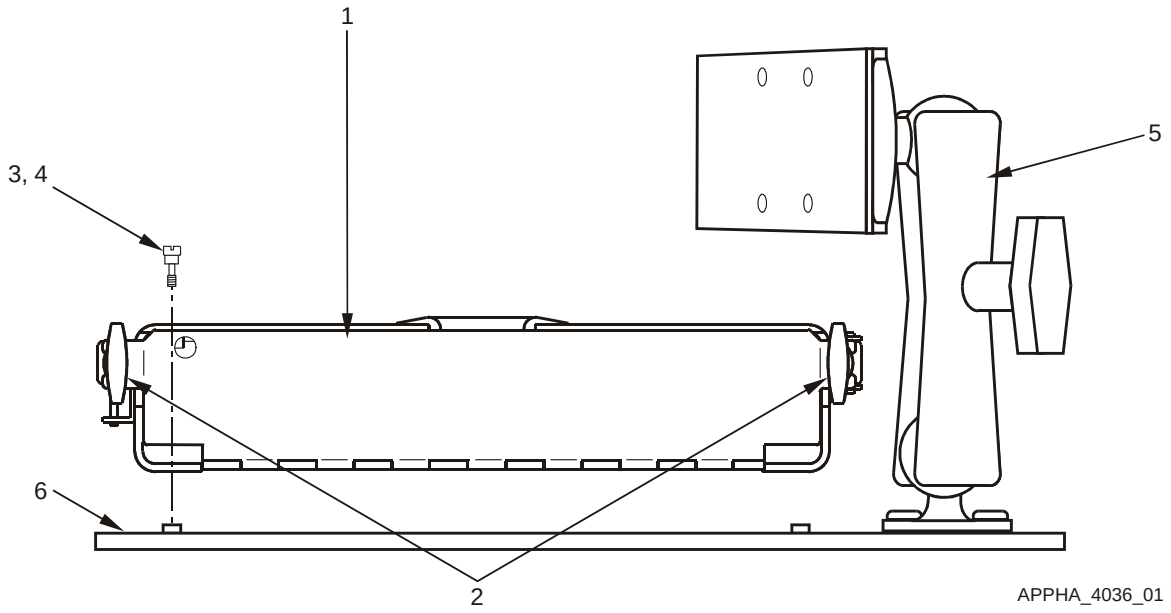

Figure E-11. Remove and Replace Keyboard Unit (KU) Stowage Box

Key and Parts List for Figure E-11

ITEM NO.	NOMENCLATURE	CAGE CODE	PART NUMBER	NSN	QTY	SMR
1	Box, KU Stowage	0J198	872845-1	2540-01-481-5744	1	PAODD
2	(KU stowage box door latch) Latch, Thumb	94222	37-20-071-20	5340-01-351-3340	2	PAOZZ
3	Screw, Captive Panel	57177	PH207-05SS1032		4	PAOZZ
4	Retainer, Panel Screw	57177	214-03SS10-32		4	PAOZZ
--	Case, Keyboard	0J198	872845-11		1	XBOOO
--	Bottom, Stowage Box	0J198	872845-12		1	XBOOO
--	Side Rail, Keybd Box	0J198	872845-13		1	XBOOO
--	Side Rail, Keybd Box	0J198	872845-14		1	XBOOO
--	Door, Keyboard Box	0J198	872845-15		1	XBOOO
--	Hinge, Keyboard Box	0J198	872845-16		1	XBOOO
--	Strip, Rubber	0J198	872845-17		1	XBOOO
--	Rivet, Solid, Csk	96906	MS20426AD-4-5	5320-00-117-6950	6	PAOZZ
--	Label, Keyboard Box	0J198	881323-1		1	PAOZZ
--	Screw, Pan Head	96906	MS35206-229	5305-00-984-4989	14	PAOZZ
--	Washer, Flat	96906	MS27183-5	5310-00-983-8483	16	PAOZZ
--	Washer, Lock	96906	MS35338-41	5310-00-045-4007	13	PAOZZ
--	Nut, Plain	96906	MS35649-262	5310-00-934-9747	3	PAOZZ
--	Rubber Edge Trim	39428	8507K16	5325-01-435-2840	9	PAOZZ
--	Adhesive	04963	SCOTCH-GRIP RUB	8040-00-664-4318	1	PAOZZ
5	Mount, RAM-Ball	0J198	889489-1		1	PAOZZ
6	(PU/DU/KU mounting bracket) Bracket, PU/DU/KU	0J198	866020-1		1	PAOZZ
--	Grip, Handle Assembly	0J198	861867-1		1	XBOOO
--	Grip, Handle	0J198	861869-1		1	XBOZZ
--	Screw, Machine	96906	MS35206-228	5305-00-984-4988	4	PAOZZ
--	Washer, Lock	96906	MS35338-41	5310-00-045-4007	4	PAOZZ
--	Tape, Shielding, Elect	39428	7648A34		1	XBOZZ

E–6.12 REMOVE/REPLACE KEYBOARD UNIT (KU) STOWAGE BOX DOOR LATCHES

Refer to Figure E-12.

NOTE

This remove/replace procedure does not require system power down. Keyboard does not have to be removed to replace the right stowage box latch. However due to limited clearance, the keyboard stowage box must be removed to replace the latch on the left side of stowage box.

E–6.12.1 REMOVE KEYBOARD UNIT (KU) STOWAGE BOX DOOR LATCHES

a. Remove KU stowage box IAW paragraph E–6.11.1, if necessary.

NOTE

KU stowage box door latch on left side of keyboard stowage box may be difficult to fasten and unfasten due to limited clearance between SINCGARS mounting base and stowage box.

b. Pull rubber T-handle and unfasten KU stowage box door latches, if necessary.

c. Remove two pan head screws (1), lock washers (2) and flat washers (3) from each KU stowage box door latch (4) using a No. 2 cross-tip screwdriver.

d. Remove KU stowage box door latch (4).

E–6.12.2 REPLACE KEYBOARD UNIT (KU) STOWAGE BOX DOOR LATCHES

NOTE

The same KU stowage box door latch part is used for each side of the keyboard stowage box. There is a bumper on one side of the latch that should be positioned toward the side of the keyboard stowage box when fastened.

a. Align KU stowage box door latch mounting holes with mounting holes in KU stowage box.

b. Install and tighten two pan head screws (1), lock washers (2) and flat washers (3) for each KU stowage box door latch (4), using a No. 2 cross-tip screwdriver.

NOTE

KU stowage box door latch on left side of keyboard stowage box may be difficult to fasten and unfasten due to limited clearance between SINCGARS mounting base and stowage box.

c. Pull rubber T-handle and fasten KU stowage box door latches.

d. Install KU stowage box IAW paragraph E–6.11.2, if necessary.

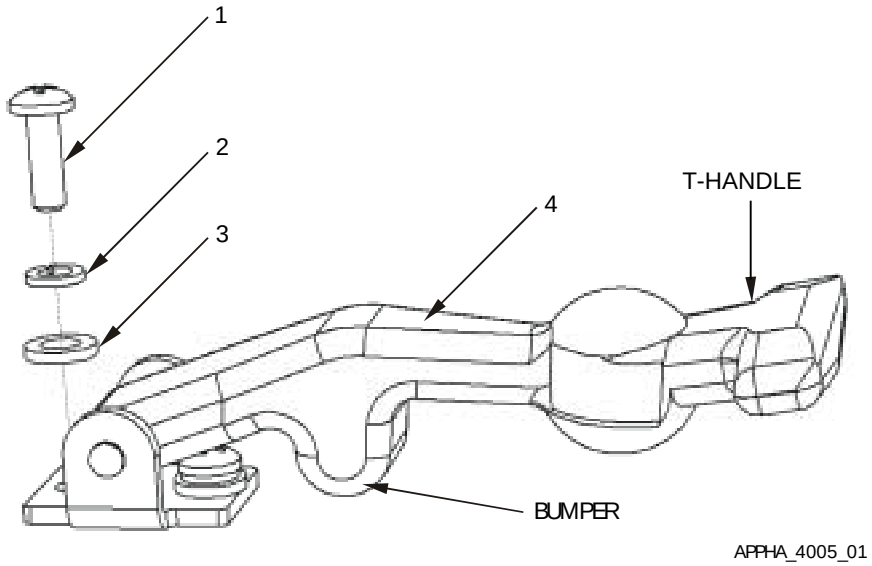

Figure E-12. Remove and Replace Keyboard Unit (KU) Stowage Box Latch

Key and Parts List for Figure E-12

ITEM NO.	NOMENCLATURE	CAGE CODE	PART NUMBER	NSN	QTY	SMR
1	Screw, Pan Head	96906	MS35206-229	5305-00-984-4989	4	PAOZZ
2	Washer, Lock	96906	MS35338-41	5310-00-045-4007	4	PAOZZ
3	Washer, Flat	96906	MS27183-5	5310-00-983-8483	4	PAOZZ
4	(KU stowage box door latch) Latch, Thumb	94222	37-20-071-20	5340-01-351-3340	2	PAOZZ

This page intentionally left blank.

APPENDIX F

SUPPLEMENTARY INFORMATION FOR

M548A3 VOLCANO

TABLE OF CONTENTS

Page
F–1 GENERAL F–3
F–2 COMPONENT ITEM NUMBERS AND PART NUMBERS F–3
F–3 SYSTEM INTERFACES F–3
F–3.1 MECHANICAL F–3
F–3.2 CABLE INTERFACES F–4
F–4 COMPONENT LOCATION F–6
F–4.1 GENERAL LOCATION F–6
F–4.2 MOUNTING F–7
F–5 PLATFORM-UNIQUE TROUBLESHOOTING F–9
F–6 REMOVAL/REPLACEMENT IN THE PLATFORM F–9
F–6.1 FUNCTIONAL CHECK F–9
F–6.2 REMOVE/REPLACE W1 POWER CABLE F–10
F–6.3 REMOVE/REPLACE W2 DISPLAY CABLE F–11
F–6.4 REMOVE/REPLACE W3 SERIAL INTERFACE ADAPTER DEVICE (SIAD) F–12
F–6.5 REMOVE/REPLACE W3P PLGR CABLE F–13
F–6.6 REMOVE/REPLACE W3N INC CABLE F–14
F–6.7 REMOVE/REPLACE W4 AUDIO CABLE F–15
F–6.8 REMOVE/REPLACE PU ISOLATION ASSEMBLY F–18
F–6.9 REMOVE/REPLACE PU PLATE ASSEMBLY F–21
F–6.10 REMOVE/REPLACE DU ISOLATION ASSEMBLY F–23
F–6.11 REMOVE/REPLACE RAM-BALL ASSEMBLY F–27
F–6.12 REMOVE/REPLACE KEYBOARD UNIT (KU) STOWAGE BOX F–31
F–6.13 REMOVE/REPLACE KEYBOARD UNIT (KU) STOWAGE BOX DOOR LATCHES F–33

LIST OF ILLUSTRATIONS

Page
Figure F-1. Equipment Interface Block Diagram F–5
Figure F-2. Relative Component Locations F–6
Figure F-3. Front View Equipment Mounting Details F–7
Figure F-4. Side View Equipment Mounting Details F–8
Figure F-5. Cable Run F–16
Figure F-6. Remove and Replace PU Isolation Assembly F–19
Figure F-7. Remove and Replace PU Plate Assembly F–22
Figure F-8. Remove and Replace DU Isolation Assembly F–25
Figure F-9. Remove and Replace RAM-Ball Assembly F–29
Figure F-10. Remove and Replace Keyboard Unit (KU) Stowage Box F–31
Figure F-11. Remove and Replace Keyboard Unit (KU) Stowage Box Door Latches F–33

F–1 GENERAL

This appendix describes the interfaces between the FBCB2 equipment and the M548A3 VOLCANO. This appendix also identifies the component parts of the M548A3 platform installation kit and details the removal and replacement procedures particular to the M548A3 VOLCANO.

F–2 COMPONENT ITEM NUMBERS AND PART NUMBERS

Key and Parts List tables contained in the Removal and Replacement section of this Appendix serve a dual purpose. Use the Item Numbers in the Key to identify components and attaching hardware shown in the Figures illustrating the tasks. The nomenclature and part number for the hardware and equipment mounting components of the installation kit also are keyed to the Item Numbers in the tables. Additional parts ordering information, such as Contractor and Government Entity code (CAGE); National Stock Number (NSN); quantity; and Source, Maintenance, and Recoverability (SMR) codes, are provided. The Key and Parts List follow the task illustrations.

F–3 SYSTEM INTERFACES

F–3.1 MECHANICAL

The mechanical hardware-to-hardware interfaces include:

a. Cables

b. Processor Unit (PU)

c. Display Unit (DU)

d. Keyboard Unit (KU)

F–3.2 CABLE INTERFACES

Figure F-1 illustrates a block diagram of the interface between FBCB2 equipment and the M548A3 VOLCANO (Platform). Figure F-1 also illustrates the signal and control interfaces along with the terminal connector labels (e.g., P1, P2). The purpose of each cable is listed below:

Cable Name	Purpose
W1–Cable	Supplies vehicle power (28 VDC) to the AN/UYK-128 (V) computer and its subassemblies.
W2–Cable	Supplies power and signals to the Display Unit (DU) and Keyboard Unit (KU). Returns Man Machine Interface (MMI) information from the KU to the Processor Unit (PU).
W3–Cable	The Serial Interface Adapter Device (SIAD) is a conduit assembly that breaks out each of the serial interface ports to a connector.
W3P–Cable	Collects position and time information from the PLGR.
W3N–Cable	Provides duplex communication between the PU, Internet Controller (INC) and radios.
W4–Cable	Connects audio signals from the PU to the Intercom system and Combat Vehicle Crew (CVC) Helmet.
W5–Cable	The Expansion Interface Adapter Device (EIAD) is connected to the Universal Serial Bus (USB) connector only when this vehicle is to be used in a Tactical Operations Center (TOC) setup. When used in this configuration, the EIAD is connected between the PU J5 connector and local router.
Ground Strap	Provides safety ground for the PU.
Ground Strap	Provides safety ground for the DU.

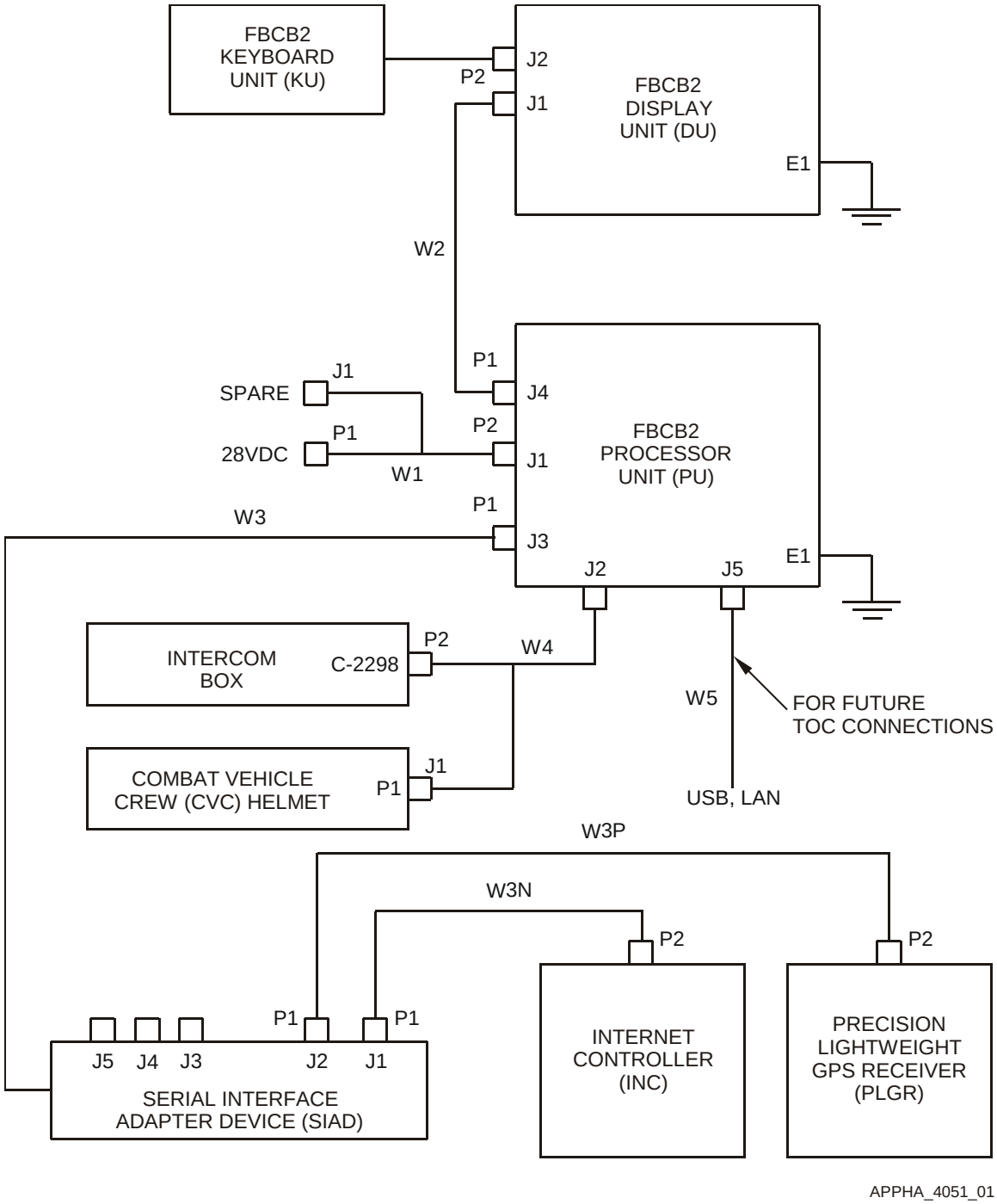

Figure F-1. Equipment Interface Block Diagram

F–4 COMPONENT LOCATION

F–4.1 GENERAL LOCATION

Figure F-2 shows the relative location of the FBCB2 computer equipment and mounting components in the in the cab of the M548A3 VOLCANO.

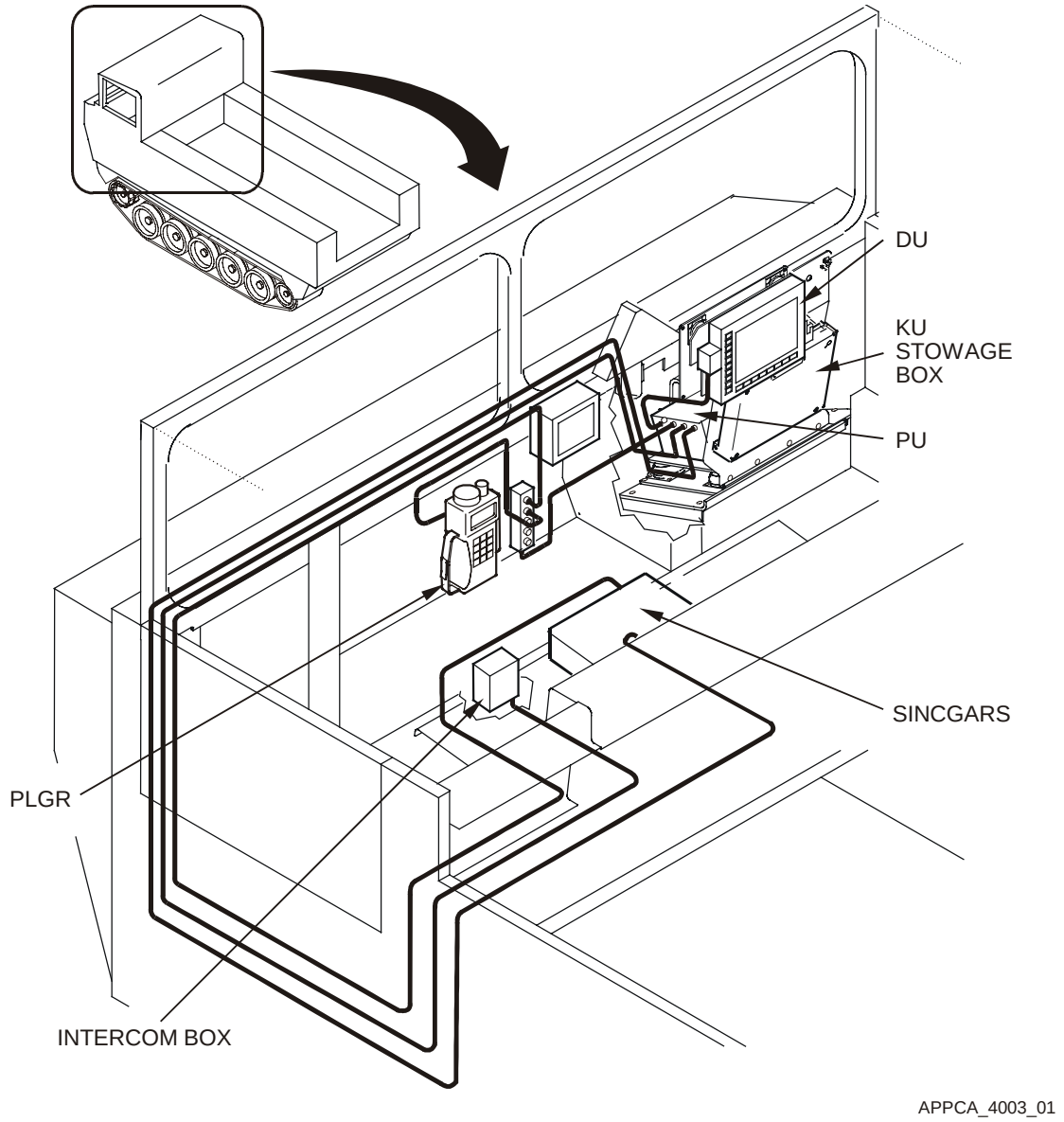

Figure F-2. Relative Component Locations

F–4.2 MOUNTING

Figure F-3 illustrates a detail view of the FBCB2 equipment mounting looking forward from the cab. The DU is mounted on the dashboard. The keyboard stowage box is mounted on a door assembly in the passenger foot-well. The PU is mounted on a slanted plate assembly behind the KU door assembly.

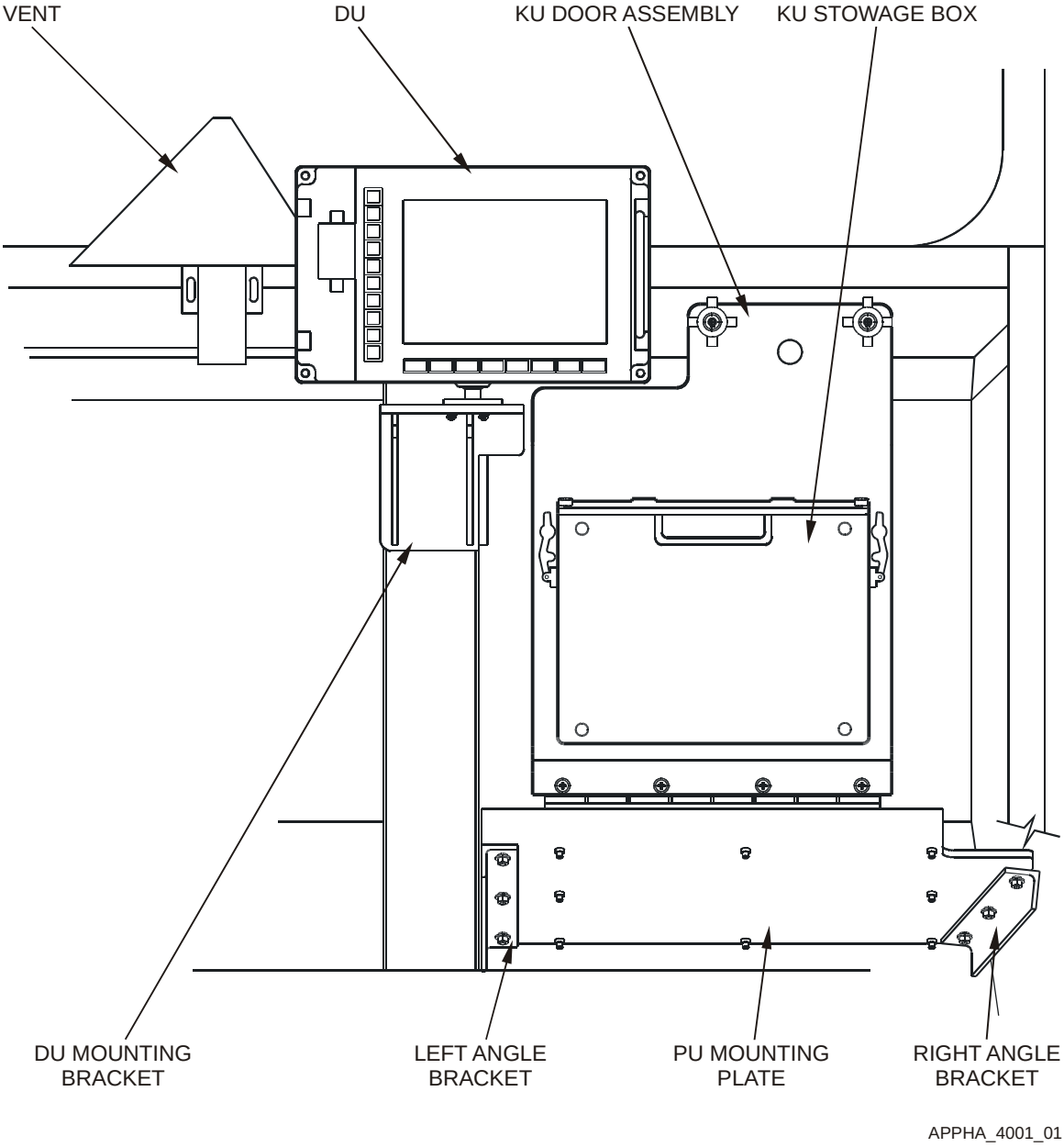

Figure F-3. Front View Equipment Mounting Details

F–4.2.1 SIDE VIEW MOUNTING

Figure F-4 illustrates a side view of the FBCB2 equipment mounted in the cab of the vehicle.

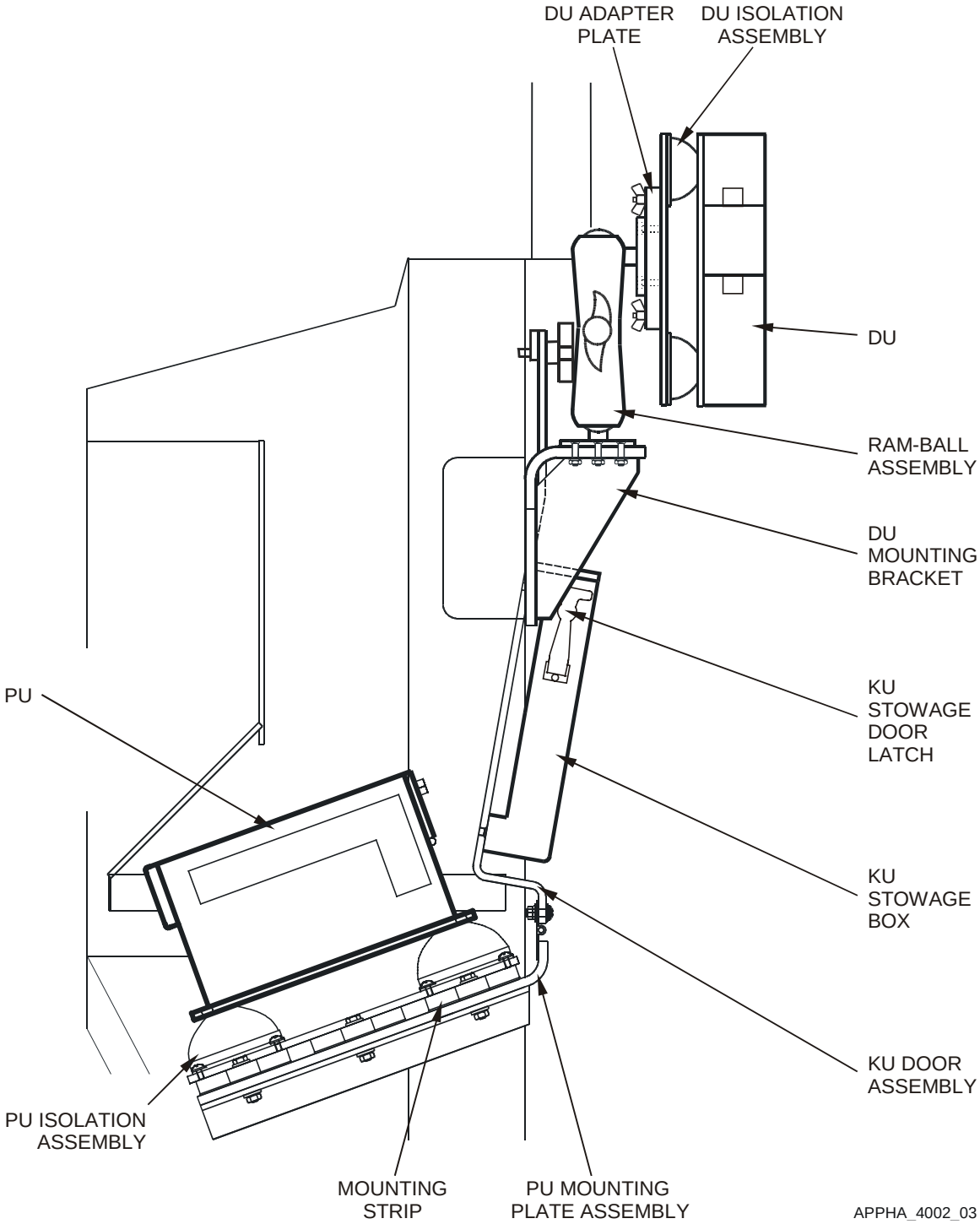

Figure F-4. Side View Equipment Mounting Details

F–5 PLATFORM-UNIQUE TROUBLESHOOTING

There are no unique troubleshooting procedures for this vehicle.

F–6 REMOVAL/REPLACEMENT IN THE PLATFORM

Most installations must be tailored to the platform. Cables and brackets are unique to the installation. Before a part or assembly is removed from a vehicle, fill out a “Maintenance Request” DA Form 2407. One copy of this completed form must remain with the vehicle and the remaining copies must be kept with the faulty component. To prove the operability of the system after an item is replaced, perform the system Functional Check.

F–6.1 FUNCTIONAL CHECK

F–6.1.1 POWER UP

Power up and initialize all interface equipment and the AN/UYK-128(V) In Accordance With (IAW) the Operator’s Manual TM 11-7010-326-10, or Pocket Guide TB 11-7010-326-10.

F–6.1.2 VERIFICATION

NOTE

Observe that the Display Unit PWR, DISP and CPU green LED lights are lit.

a. Observe that the PLGR synchronizes with PU, indicated by the PLGR dialog box showing green.

b. Observe that the Router synchronizes with the PU, indicated by the Router dialog box showing green.

c. At the Session Manager screen, select OPS button to display the OPS screen.

d. Verify the GPS status is either green or amber on the Classification/Status Bar.

e. Verify the Communications status is either green or amber on the Classification/Status Bar.

F–6.1.3 POWER DOWN

Power down all interface equipment and the AN/UYK-128(V) IAW the Operator’s Manual TM 11-7010-326-10, or Pocket Guide TB 11-7010-326-10.

F–6.2 REMOVE/REPLACE W1 POWER CABLE

Refer to Figure F-5.

F–6.2.1 REMOVE W1 POWER CABLE

WARNING

Before conducting maintenance involving the removal and replacement of system components, ensure that all power to the FBCB2 system is off (including power from the vehicle). Failure to comply with warning may result in equipment damage or injury to personnel.

a. Power down AN/UYK-128(V) system IAW Operator's Manual TM 11-7010-326-10, or Pocket Guide TB 11-7010-326-10.

b. Power down SINCGARS IAW TM 11-5820-890-10-8.

c. Unlatch and slide the Vehicle Amplifier-Adapter (VAA) AM-7239/VRC forward to access W1-P1 power cable connector.

d. Disconnect W1-P1 cable connector from the SINCGARS Mounting Base (MB) (MT-6352/VRC) A4-J2 connector.

e. Loosen two threaded star knobs and open KU door assembly.

f. Disconnect W1-P2 cable connector from PU J1 connector.

g. Install protective cap on PU J1 connector.

NOTE

Note cable routing and tie-wrap locations before removing cable or tie-wraps.

h. Remove tie-wraps securing W1 cable using diagonal wire cutters.

i. Remove W1 power cable (1).

F–6.2.2 REPLACE W1 POWER CABLE

a. Route W1 power cable (1) along existing cable harness.

b. Remove protective cap from PU J1 connector.

c. Connect W1-P2 cable connector to PU J1 connector.

d. Connect W1-P1 cable connector to SINCGARS Mounting Base (MB) (MT-6352/VRC) A4-J2 connector.

e. Secure VAA, AM-7239/VRC in original mounting position IAW TM 11-5820-890-10-8.

f. Secure W1 cable using tie-wraps.

g. Dress tie-wraps using diagonal wire cutters.

h. Perform Functional Check IAW paragraph F–6.1.

F–6.3 REMOVE/REPLACE W2 DISPLAY CABLE

Refer to Figure F-5.

F–6.3.1 REMOVE W2 DISPLAY CABLE

WARNING

Before conducting maintenance involving the removal and replacement of system components, ensure that all power to the FBCB2 system is off (including power from the vehicle). Failure to comply with warning may result in equipment damage or injury to personnel.

a. Power down AN/UYK-128(V) system IAW Operator's Manual TM 11-7010-326-10, or Pocket Guide TB 11-7010-326-10.

b. Loosen two threaded star knobs and open KU door assembly.

c. Loosen PU front retainers and move PU slightly to right for better access to connectors.

d. Disconnect W2-P1 cable connector from PU J4 connector.

e. Install protective cap on PU J4 connector.

f. Disconnect W2-P2 cable connector from display J1 connector.

g. Install protective cap on display J1 connector.

NOTE

Note cable routing and tie-wrap locations before removing cable or tie-wraps.

h. Remove tie-wraps from W2 cable and ground strap using diagonal wire cutters.

i. Remove W2 display cable (2).

F–6.3.2 REPLACE W2 DISPLAY CABLE

a. Route W2 display cable (2).

b. Remove protective cap from display J1 connector.

c. Connect W2-P2 cable connector to display J1 connector.

d. Loosen two threaded star knobs and open KU door assembly.

e. Remove protective cap from PU J4 connector.

f. Connect W2-P1 cable connector to PU J4 connector.

g. Reposition PU on guides and secure with self-locking front retainers.

h. Secure W2 cable and ground strap to DU isolation assembly using tie-wraps.

i. Dress tie-wraps using diagonal wire cutters.

j. Perform Functional Check IAW paragraph F–6.1.

F–6.4 REMOVE/REPLACE W3 SERIAL INTERFACE ADAPTER DEVICE (SIAD)

Refer to Figure F-5.

F–6.4.1 REMOVE W3 SERIAL INTERFACE ADAPTER DEVICE (SIAD)

WARNING

Before conducting maintenance involving the removal and replacement of system components, ensure that all power to the FBCB2 system is off (including power from the vehicle). Failure to comply with warning may result in equipment damage or injury to personnel.

a. Power down AN/UYK-128(V) system IAW Operator's Manual TM 11-7010-326-10, or Pocket Guide TB 11-7010-326-10.

b. Disconnect W3N-P1 cable connector from W3 SIAD J1 connector.

c. Disconnect W3P-P1 cable connector from W3 SIAD J2 connector.

d. Loosen PU front retainers and move PU slightly to right for better access to connectors.

e. Loosen two threaded star knobs and open KU door assembly.

f. Disconnect W3 SIAD P1 cable connector from PU J3 connector.

g. Install protective cap on PU J3 connector.

NOTE

Note cable routing and tie-wrap locations before removing cable or tie-wraps.

h. Remove tie-wraps securing W3 SIAD using diagonal wire cutters.

i. Remove W3 SIAD (3).

F–6.4.2 REPLACE W3 SERIAL INTERFACE ADAPTER DEVICE (SIAD)

a. Route W3 SIAD cable (3).

b. Remove protective cap from PU J3 connector.

c. Connect W3 SIAD-P1 cable connector on PU J3 connector.

d. Reposition PU on guides and secure with self-locking front retainers.

e. Connect W3P-P1 cable connector to W3 SIAD J2 connector.

f. Connect W3N-P1 cable connector to W3 SIAD J1 connector.

g. Secure W3 SIAD using tie-wraps.

h. Dress tie-wraps using diagonal wire cutters.

i. Perform Functional Check IAW paragraph F–6.1.

F–6.5 REMOVE/REPLACE W3P PLGR CABLE

Refer to Figure F-5.

F–6.5.1 REMOVE W3P PLGR CABLE

WARNING

Before conducting maintenance involving the removal and replacement of system components, ensure that all power to the FBCB2 system is off (including power from the vehicle). Failure to comply with warning may result in equipment damage or injury to personnel.

a. Power down AN/UYK-128(V) system IAW Operator's Manual TM 11-7010-326-10, or Pocket Guide TB 11-7010-326-10.

b. Disconnect W3P-P1 cable connector from W3 SIAD J2 connector.

c. Remove PLGR from mount.

d. Disconnect W3P-P2 cable connector from PLGR J2 connector using an offset flat screwdriver.

NOTE

Note cable routing and tie-wrap locations before removing cable or tie-wraps.

e. Remove tie-wraps securing W3P cable using diagonal wire cutters.

f. Remove W3P cable (6).

F–6.5.2 REPLACE W3P PLGR CABLE

a. Route W3P cable (6).

b. Connect W3P-P2 cable connector to PLGR J2 connector using an offset flat screwdriver.

c. Install PLGR in mount.

d. Connect W3P-P1 cable connector to W3 SIAD J2 connector.

e. Secure W3P cable using tie-wraps.

f. Dress tie-wraps using diagonal wire cutters.

g. Perform Functional Check IAW paragraph F–6.1.

F–6.6 REMOVE/REPLACE W3N INC CABLE

Refer to Figure F-5.

F–6.6.1 REMOVE W3N INC CABLE

WARNING

Before conducting maintenance involving the removal and replacement of system components, ensure that all power to the FBCB2 system is off (including power from the vehicle). Failure to comply with warning may result in equipment damage or injury to personnel.

a. Power down AN/UYK-128(V) system IAW Operator's Manual TM 11-7010-326-10, or Pocket Guide TB 11-7010-326-10.

b. Disconnect W3N-P1 cable connector from W3 SIAD J1 connector.

c. Disconnect W3N-P2 cable connector from SINCGARS INC J6 connector.

NOTE

Note cable routing and tie-wrap locations before removing cable or tie-wraps.

d. Remove tie-wraps securing W3N cable using diagonal cutters.

e. Remove W3N cable (5).

F–6.6.2 REPLACE W3N INC CABLE

a. Route W3N cable (5) along existing cable harness.

b. Connect W3N-P2 cable connector to SINCGARS INC J6 connector.

c. Connect W3N-P1 cable connector to W3 SIAD J1 connector.

d. Secure W3N cable using tie-wraps.

e. Dress tie-wraps using diagonal wire cutters.

f. Perform Functional Check IAW paragraph F–6.1.

F–6.7 REMOVE/REPLACE W4 AUDIO CABLE

Refer to Figure F-5.

F–6.7.1 REMOVE W4 AUDIO CABLE

WARNING

Before conducting maintenance involving the removal and replacement of system components, ensure that all power to the FBCB2 system is off (including power from the vehicle). Failure to comply with warning may result in equipment damage or injury to personnel.

a. Power down AN/UYK-128(V) system IAW Operator's Manual TM 11-7010-326-10, or Pocket Guide TB 11-7010-326-10.

b. Loosen two threaded star knobs and open KU door assembly.

c. Disconnect W4-P1 cable connector from PU J2 connector.

d. Install protective cap on PU J2 connector.

e. Disconnect W4-P2 cable connector from Intercom Box C-2298 connector.

f. Disconnect W4-J1 cable connector from Combat Vehicle Crew (CVC) helmet P1 connector.

NOTE

Note cable routing and tie-wrap locations before removing cable or tie-wraps.

g. Remove tie-wraps securing W4 cable using diagonal wire cutters.

h. Remove W4 cable (4).

F–6.7.2 REPLACE W4 AUDIO CABLE

a. Route W4 cable (4).

b. Connect W4-J1 cable connector to CVC helmet P1 connector.

c. Connect W4-P2 cable connector to the Intercom Box C-2298 connector.

d. Remove protective cap from PU J2 connector.

e. Connect W4-P1 cable connector to PU J2 connector.

f. Secure W4 cable using tie-wraps.

g. Dress tie-wraps using diagonal wire cutters.

h. Perform Functional Check IAW paragraph F–6.1.

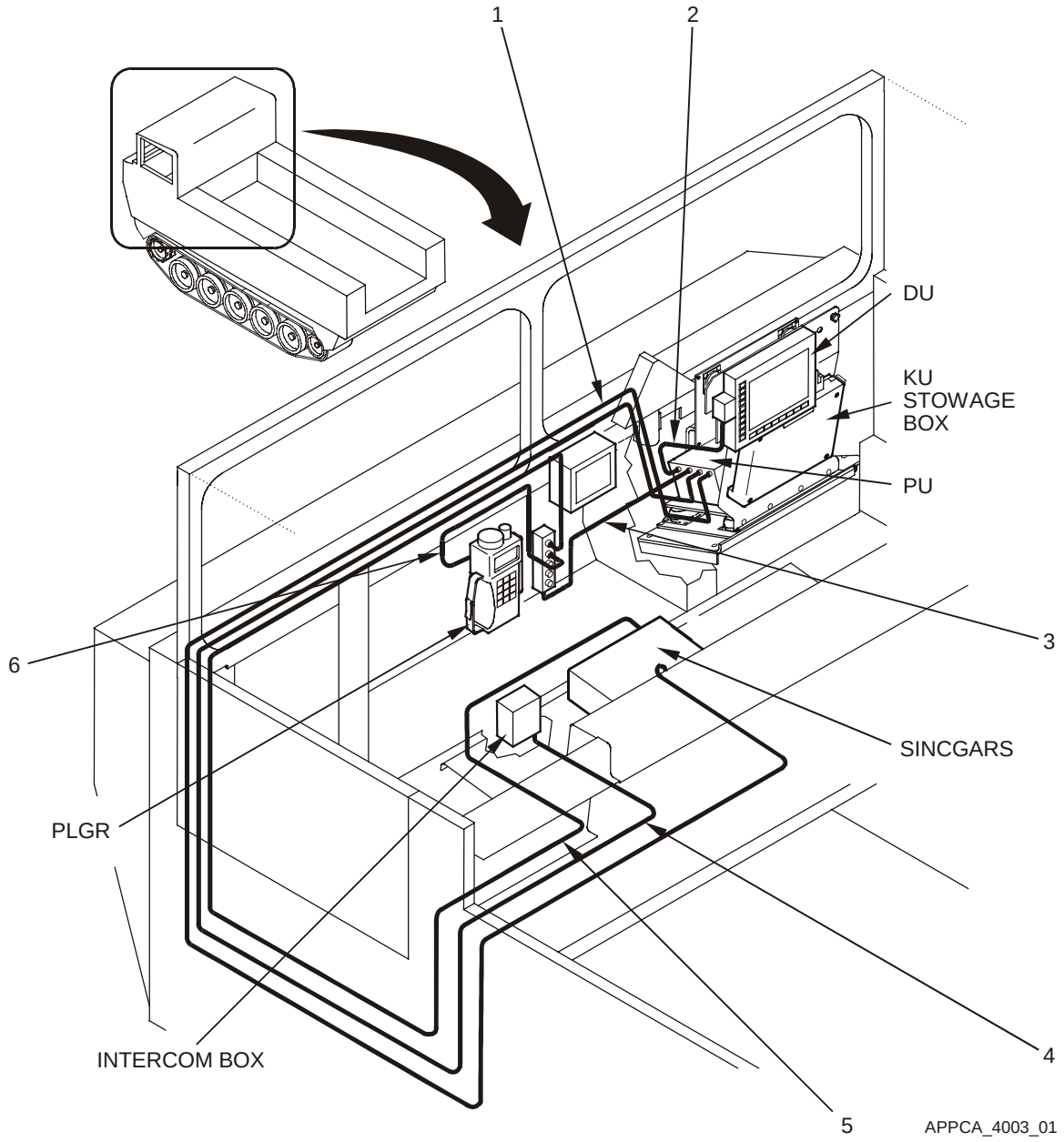

Figure F-5. Cable Run

Key and Parts List for Figure F-5

ITEM NO.	NOMENCLATURE	CAGE CODE	PART NUMBER	NSN	QTY	SMR
1	Cable Assembly W1	0J198	861880-9	5995-01-478-5069	1	PAODD
2	Cable Assembly W2	0J198	881327-1	5995-01-478-4876	1	PAODD
3	Adapter Assy SIAD W3	0J198	881331-1	4920-01-478-3722	1	PAODD
4	Cable Assembly W4	0J198	881270-3	5995-01-478-4934	1	PAODD
5	Cable Assembly W3N	0J198	881336-4	5995-01-478-4926	1	PAODD
6	Cable Assembly W3P	0J198	881335-3	5995-01-478-4898	1	PAODD
--	Strap, Tie Down, Elect	39428	7130K31		A/R	PAOZZ

F–6.8 REMOVE/REPLACE PU ISOLATION ASSEMBLY

Refer to Figure F-6.

NOTE

Ground straps are attached to components at one end (PU and DU) and a frame ground at the other end. Regardless of where the ground strap terminates, it is usually a burnished (void of paint) area. If the ground strap is removed from a burnished area make sure to return it to the same burnished area. Where applicable, always connect the ground strap first when assembling, and disconnect the ground strap last when disassembling.

F–6.8.1 REMOVE PU ISOLATION ASSEMBLY

WARNING

Before conducting maintenance involving the removal and replacement of system components, ensure that all power to the FBCB2 system is off (including power from the vehicle). Failure to comply with warning may result in equipment damage or injury to personnel.

a. Power down AN/UYK-128(V) system IAW Operator's Manual TM 11-7010-326-10, or Pocket Guide TB 11-7010-326-10.

b. Loosen two threaded star knobs and open KU door assembly.

NOTE

Do not remove the Removable Hard Disk Drive Cartridge (RHDDC) or locking bracket from PU.

c. Remove PU IAW Unit Maintenance Manual TM 11-7010-326-20&P, Chapter 2.

d. Remove one hex head screw (6), lock washer (7), flat washer (8) and ground strap from PU isolation assembly (1) bottom plate, mounting strip (4) and PU plate assembly (2) using a 7/16" socket with ratchet and 3" extension.

e. Remove remaining five hex head screws (6), lock washers (7) and flat washers (8) from PU isolation assembly (1) bottom plate, mounting strips (4, 5) and PU plate assembly (2) using a 7/16" socket with ratchet and 3" extension.

f. Remove PU isolation assembly (1) from mounting strips (4, 5) and PU plate assembly (2).

F–6.8.2 REPLACE PU ISOLATION ASSEMBLY

a. Align six holes in PU isolation assembly (1) bottom plate with holes in three mounting strips (4, 5) and the PU plate assembly (2) inserts.

NOTE

To ensure positive ground, PU ground strap must make direct contact with bare metal. Ensure PU ground strap is installed in its original location at the PU isolation assembly bottom plate mounting hole. Slip the lock washer, flat washer and then the ground strap on the mounting screw before installing and tightening screw.

b. Install one hex head screw (6), lock washer (7), flat washer (8) and ground strap on PU isolation assembly (1) bottom plate, mounting strip (4) and PU plate assembly (2) using a 7/16” socket with ratchet and 3” extension

c. Install remaining five hex head screws (6), lock washers (7) and flat washers (8) on PU isolation assembly (1) bottom plate, mounting strips (4, 5) and PU plate assembly (2) using a 7/16” socket with ratchet and 3” extension.

d. Install PU IAW Unit Maintenance Manual TM 11-7010-326-20&P, Chapter 2.

e. Close KU door assembly and tighten threaded star knobs.

f. Perform Functional Check IAW paragraph F–6.1.

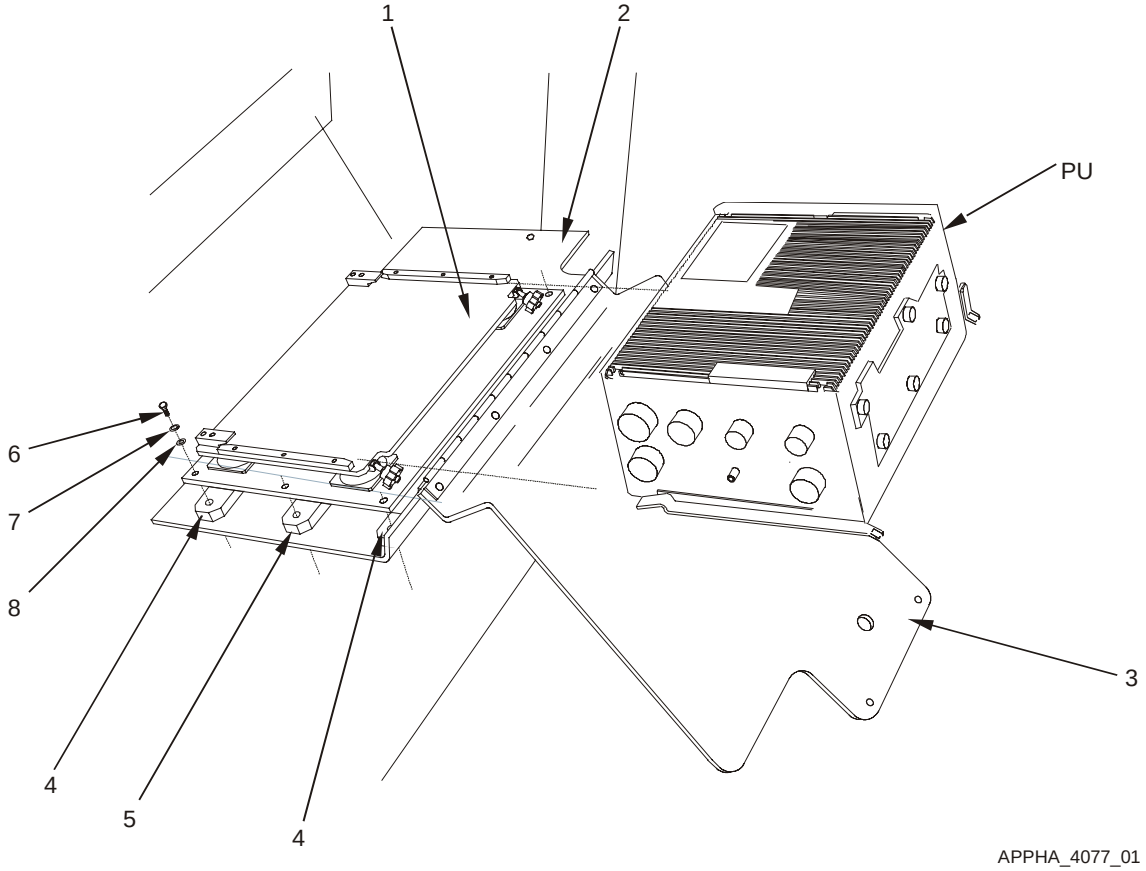

Figure F-6. Remove and Replace PU Isolation Assembly

Key and Parts List for Figure F-6

ITEM NO.	NOMENCLATURE	CAGE CODE	PART NUMBER	NSN	QTY	SMR
1	(PU isolation assembly) Plate, Resilient Mount PU	0J198	872826-1	5340-01-481-5742	1	PAODD
2	Assembly, PU Plate	80212	4250178		1	XBOOO
3	Door Assembly, KU	80212	4250187		1	XBOOO
--	Insert, Screw Thread	96906	MS51832-103	5325-00-725-1509	2	PAOZZ
4	Strips, PU Mounting	0J198	889497-1		2	XBOOO
5	Strip, Center Mounting	0J198	889497-2		1	XBOOO
6	Screw, Cap, Hexagon	80204	B1821AH025C150N	5305-01-466-7243	6	PAOZZ
7	Washer, Lock	96906	MS35333-40	5310-00-550-1130	6	PAOZZ
8	Washer, Flat	96906	MS27183-10	5310-00-809-4058	6	PAOZZ
--	Assembly, PU Lock	0J198	861865-1		1	XBOOO
--	Bracket, Locking	0J198	861871-1		1	XBOZZ
--	Screw	80205	MS35190-253	5305-00-059-4568	2	PAOZZ

F–6.9 REMOVE/REPLACE PU PLATE ASSEMBLY

Refer to Figure F-7.

NOTE

Ground straps are attached to components at one end (PU and DU) and a frame ground at the other end. Regardless of where the ground strap terminates, it is usually a burnished (void of paint) area. If the ground strap is removed from a burnished area make sure to return it to the same burnished area. Where applicable, always connect the ground strap first when assembling, and disconnect the ground strap last when disassembling.

F–6.9.1 REMOVE PU PLATE ASSEMBLY

a. Remove PU isolation assembly from PU mounting strips and PU plate assembly IAW paragraph F–6.8.1.

b. Remove six machine screws (4), twelve flat washers (5), six lock washers (10) and six hex nuts (7) from PU plate assembly and angle brackets (left 2, right 8) using a 7/16” socket with ratchet and open-end wrench.

c. Remove PU plate assembly (1) from left and right angle brackets.

d. Remove four machine screws (4), eight flat washers (5), four lock washers (6) and four hex nuts (7) from hinge and KU door assembly (3) using a No. 3 cross-tip screwdriver and 7/16” socket with ratchet.

e. Remove PU plate assembly (1) from KU door assembly (3).

F–6.9.2 REPLACE PU PLATE ASSEMBLY

a. Align four holes in PU plate assembly (1), hinge and KU door assembly (3) installation holes.

b. Install four machine screws (4), eight flat washers (5), four lock washers (6) and four hex nuts (7) on hinge and KU door assembly (3) using a No. 3 cross-tip screwdriver and 7/16” socket with ratchet.

c. Align six holes in plate assembly with right and left angle bracket installation holes.

d. Install six machine screws (4), twelve flat washers (5), six lock washers (10) and six hex nuts (7) on PU plate assembly and angle brackets (left 2, right 8) using a 7/16” socket with ratchet and open-end wrench.

e. Replace PU isolation assembly and mounting strips IAW paragraph F–6.8.2.

f. Perform Functional Check IAW paragraph F–6.1.

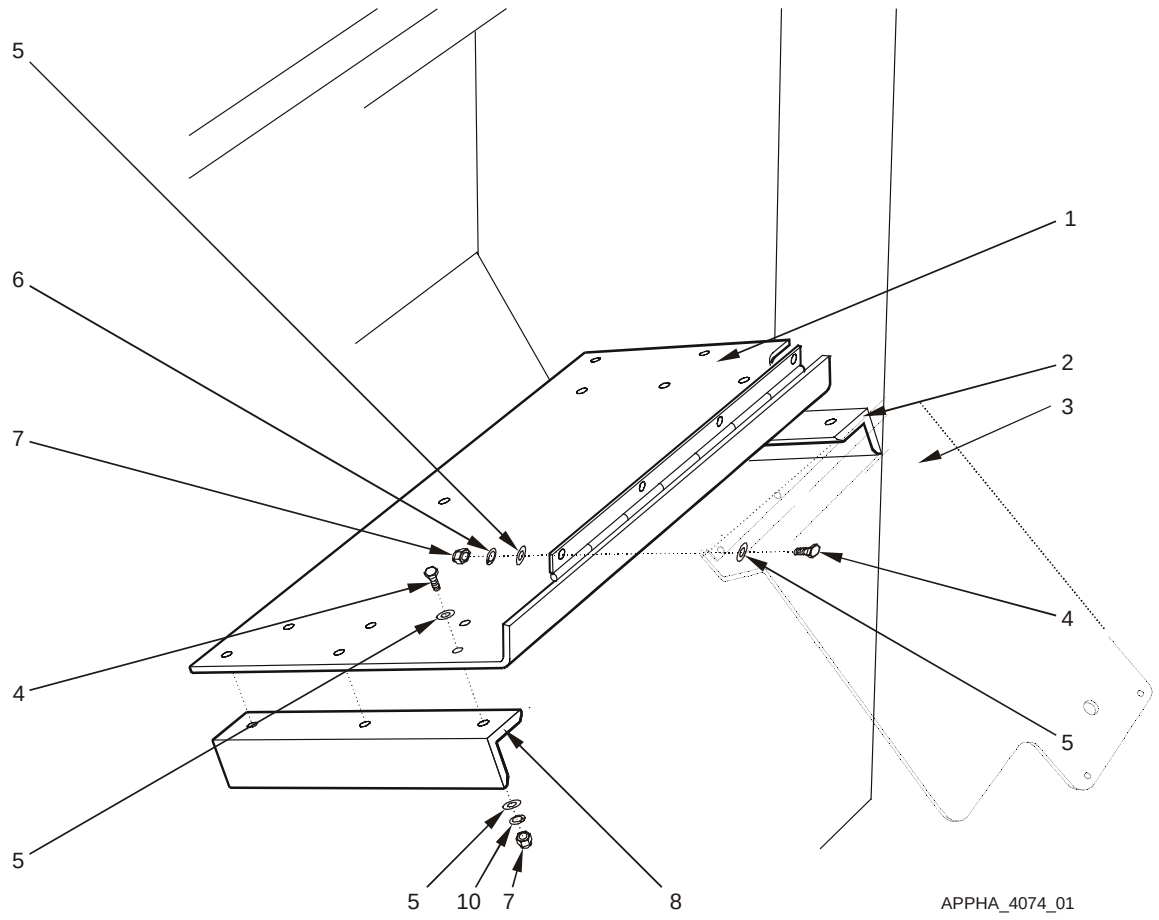

Figure F-7. Remove and Replace PU Plate Assembly

Key and Parts List for Figure F-7

ITEM NO.	NOMENCLATURE	CAGE CODE	PART NUMBER	NSN	QTY	SMR
1	Assembly, PU Plate	80212	4250178		1	XBOOO
2	Bracket, Angle, Left PU	80212	4250188		1	XBOZZ
3	Door Assembly, KU	80212	4250187		1	XBOOO
--	Insert, Screw Thread	96906	MS51832-103	5325-00-725-1509	2	PAOZZ
4	Screw, Machine	96906	MS35206-281	5305-00-988-1725	4	PAOZZ
5	Washer, Flat	96906	MS27183-10	5310-00-809-4058	20	PAOZZ
6	Washer, Lock	96906	MS35338-44	5310-00-582-5965	4	PAOZZ
7	Nut, Plain, Hexagon	96906	MS35649-2252	5310-00-997-1888	10	PAOZZ
8	Bracket, Angle, Right PU	80212	4250177		1	XBOZZ
9	Screw, Cap, Hexagon	80204	B1821AH025C088N	5305-01-389-8787	6	PAOZZ
10	Washer, Lock	96906	MS35333-40	5310-00-550-1130	6	PAOZZ

F–6.10 REMOVE/REPLACE DU ISOLATION ASSEMBLY

Refer to Figure F-8.

NOTE

Ground straps are attached to components at one end (PU and DU) and a frame ground at the other end. Regardless of where the ground strap terminates, it is usually a burnished (void of paint) area. If the ground strap is removed from a burnished area make sure to return it to the same burnished area. Where applicable, always connect the ground strap first when assembling, and disconnect the ground strap last when disassembling.

F–6.10.1 REMOVE DU ISOLATION ASSEMBLY

WARNING

Before conducting maintenance involving the removal and replacement of system components, ensure that all power to the FBCB2 system is off (including power from the vehicle). Failure to comply with warning may result in equipment damage or injury to personnel.

a. Power down AN/UYK-128(V) system IAW Operator's Manual TM 11-7010-326-10, or Pocket Guide TB 11-7010-326-10.

b. Remove DU IAW Unit Maintenance Manual TM 11-7010-326-20&P, Chapter 2.

NOTE

Note cable routing and tie-wrap locations before removing cable or tie-wraps.

c. Remove tie-wraps securing W2 cable and ground strap to DU isolation assembly using diagonal wire cutters.

d. Loosen RAM-Ball knob while supporting DU isolation assembly (2) until RAM-Ball display base with ball can be lifted free of RAM-Ball socket arm.

e. Remove four self-locking wing nuts (5), flat washers (6) and square neck bolts (3) from DU isolation assembly (2) bottom plate and DU mount adapter plate (1).

f. Remove DU isolation assembly (2) from DU mount adapter plate (1) with attached RAM-Ball display base with ball.

F–6.10.2 REPLACE DU ISOLATION ASSEMBLY

a. Align four holes in DU mount adapter plate (1) with slots in the DU isolation assembly (2) bottom plate.

b. Install four square neck bolts (3), flat washers (6) and self-locking wing nuts (5) on DU isolation assembly (2) bottom plate and DU mount adapter plate (1).

CAUTION

Ensure RAM-Ball is free of dirt and contaminants before reassembling. Failure to comply can result in slippage or excess wear of RAM-Ball assembly.

c. Inspect and clean RAM-Ball socket arm and display base with ball, as necessary, using clean lint-free wipes.

d. Insert RAM-Ball display base with ball into RAM-Ball socket arm while supporting DU isolation assembly (2).

e. Adjust viewing angle and tighten RAM-Ball knob.

f. Secure W2 display cable and ground strap to DU isolation assembly (2) bottom plate using tie-wraps.

g. Dress tie-wraps using diagonal wire cutters.

h. Install DU IAW Unit Maintenance Manual TM 11-7010-326-20&P, Chapter 2.

i. Perform Functional Check IAW paragraph F–6.1.

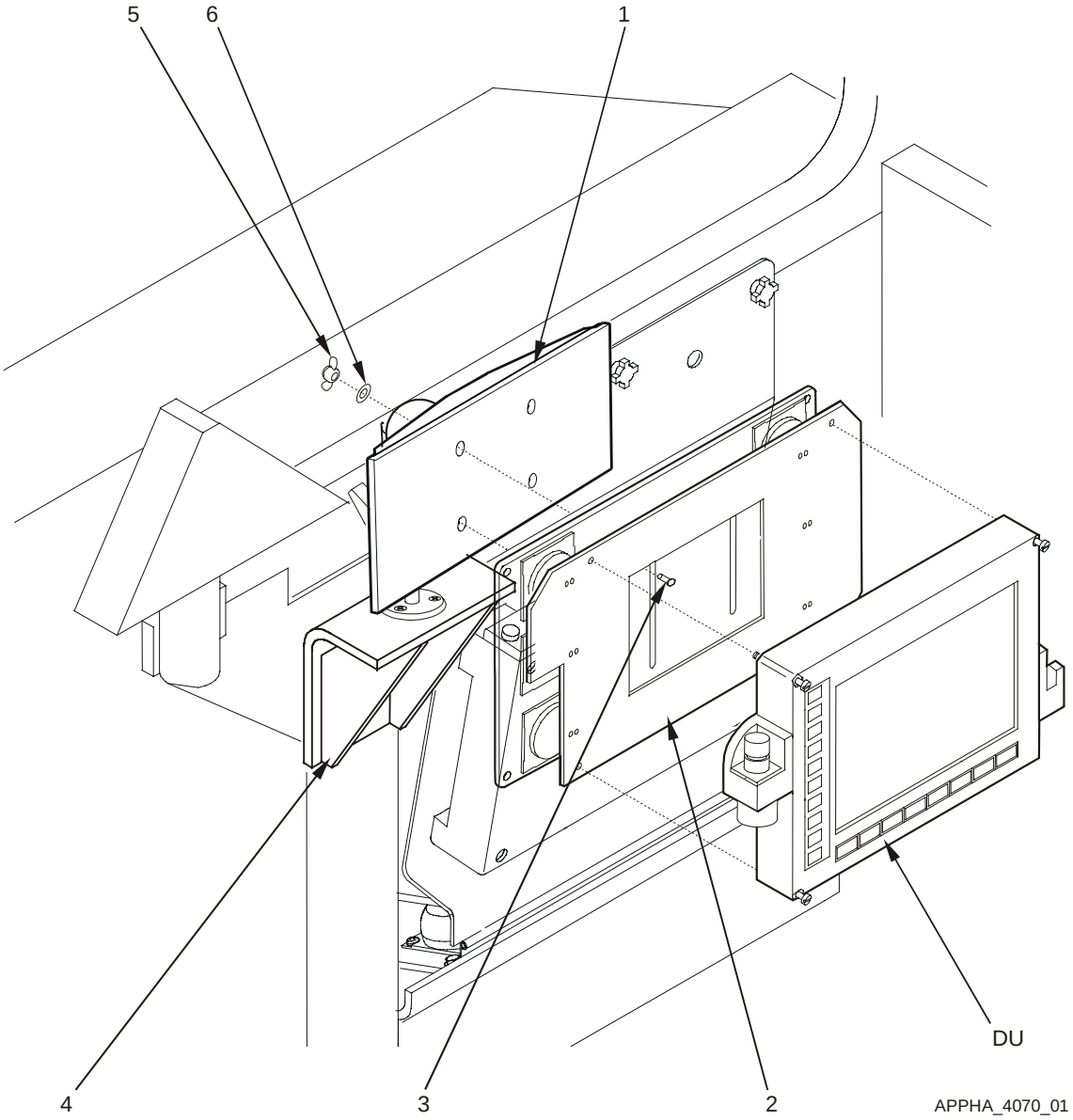

Figure F-8. Remove and Replace DU Isolation Assembly

Key and Parts List for Figure F-8

ITEM NO.	NOMENCLATURE	CAGE CODE	PART NUMBER	NSN	QTY	SMR
1	(DU mount adapter plate) Bracket, DU Mounting	0J198	872875-1		1	XBOOO
2	(DU isolation assembly) Plate, Resilient Mount DU	0J198	872870-1		1	PAODD
3	Bolt, Square Neck	96906	MS35751-17	5306-00-889-2943	4	PAOZZ
4	Bracket, Base, DU Mount	80212	4250181		1	XBOZZ
5	Nut, Self-Locking, Wing	96906	MS51553-420	5310-01-384-2546	4	PAOZZ
6	Washer, Flat	96906	MS27183-10	5310-00-809-4058	4	PAOZZ
--	Assembly, DU Lock	0J198	872843-1		1	XBOOO
--	Bracket, Locking	0J198	861871-3		1	XBOZZ
--	Washer, Lock	96906	MS35338-42	5310-00-045-3299	2	PAOZZ
--	Screw	80205	MS35190-253	5305-00-059-4568	2	PAOZZ

F–6.11 REMOVE/REPLACE RAM-BALL ASSEMBLY

Refer to Figure F-9.

NOTE

Ground straps are attached to components at one end (PU and DU) and a frame ground at the other end. Regardless of where the ground strap terminates, it is usually a burnished (void of paint) area. If the ground strap is removed from a burnished area, make sure to return it to the same burnished area. Where applicable, always connect the ground strap first when assembling, and disconnect the ground strap last when disassembling.

F–6.11.1 REMOVE RAM-BALL ASSEMBLY

WARNING

Before conducting maintenance involving the removal and replacement of system components, ensure that all power to the FBCB2 system is off (including power from the vehicle). Failure to comply with warning may result in equipment damage or injury to personnel.

a. Power down AN/UYK-128(V) system IAW Operator's Manual TM 11-7010-326-10, or Pocket Guide TB 11-7010-326-10.

b. Remove DU IAW Unit Maintenance Manual TM 11-7010-326-20&P, Chapter 2.

NOTE

Note cable routing and tie-wrap locations before removing cable or tie-wraps.

c. Remove tie-wraps securing W2 display cable and ground strap to DU isolation assembly using diagonal wire cutters.

d. Loosen RAM-Ball knob while supporting DU isolation assembly until RAM-Ball display base with ball can be lifted free of RAM-Ball socket arm.

e. Remove RAM-Ball socket arm from RAM-Ball display base with ball on DU base mount bracket.

f. Remove three pan head screws (7), flat washers (4), lock washers (3) and hex nuts (8) from the RAM-Ball mounting base with ball and DU base mount bracket (6) using a 3/8" socket with ratchet and No. 3 cross-tip screwdriver.

g. Remove three pan head screws (2), lock washers (3) and flat washers (4) from RAM-Ball display base with ball and DU mount adapter plate (5).

h. Remove RAM-Ball display base with ball from DU mount adapter plate (5).

F–6.11.1 REMOVE RAM-Ball ASSEMBLY (Continued)

NOTE

If removing DU mount adapter plate (5) from DU isolation assembly bottom plate, continue with the following steps.

i. Remove four self-locking wing nuts (11), flat washers (10) and square neck bolts (9) from DU mount adapter plate (5) and DU isolation assembly bottom plate.

j. Remove display mount bracket from display isolation assembly bottom plate.

F–6.11.2 REPLACE RAM-BALL ASSEMBLY

NOTE

If installing DU mount adapter plate (5) on DU isolation assembly bottom plate perform steps a through c, otherwise begin with step d.

a. Align four holes in DU mount adapter plate (5) with slots in DU isolation assembly bottom plate.

b. Install four square neck bolts (9), flat washers (10) and self locking wing nuts (11) on DU mount adapter plate (5) and DU isolation assembly bottom plate.

c. Align three holes in RAM-Ball mounting base with ball with DU base mount bracket (6) installation holes.

d. Install three pan head screws (7), flat washers (4), lock washers (3) and hex nuts (8) using a No. 3 cross-tip screwdriver and 3/8” socket with ratchet.

CAUTION

Ensure RAM-Ball is free of dirt and contaminants before reassembling. Failure to comply can result in slippage or excess wear of RAM-Ball assembly.

e. Inspect and clean RAM-Ball socket arm, display and mounting base with ball, as necessary, using clean lint-free wipes.

f. Install RAM-Ball socket arm on RAM-Ball mounting base with ball on DU base mount bracket (6).

g. Align three holes in RAM-Ball display base with ball with display DU mount adapter plate (5) installation holes.

h. Install three pan head screws (2), lock washers (3) and flat washers (4) using a No. 3 cross-tip screwdriver.

i. Insert RAM-Ball display base with ball (and attached DU isolation assembly) into RAM-Ball socket arm.

j. Adjust viewing angle and tighten RAM-Ball knob.

k. Install DU IAW Unit Maintenance Manual TM 11-7010-326-20&P, Chapter 2.

l. Secure W2 display cable and ground strap to DU isolation assembly using tie-wraps.

m. Dress tie-wraps using diagonal wire cutters.

n. Perform Functional Check IAW paragraph F–6.1.

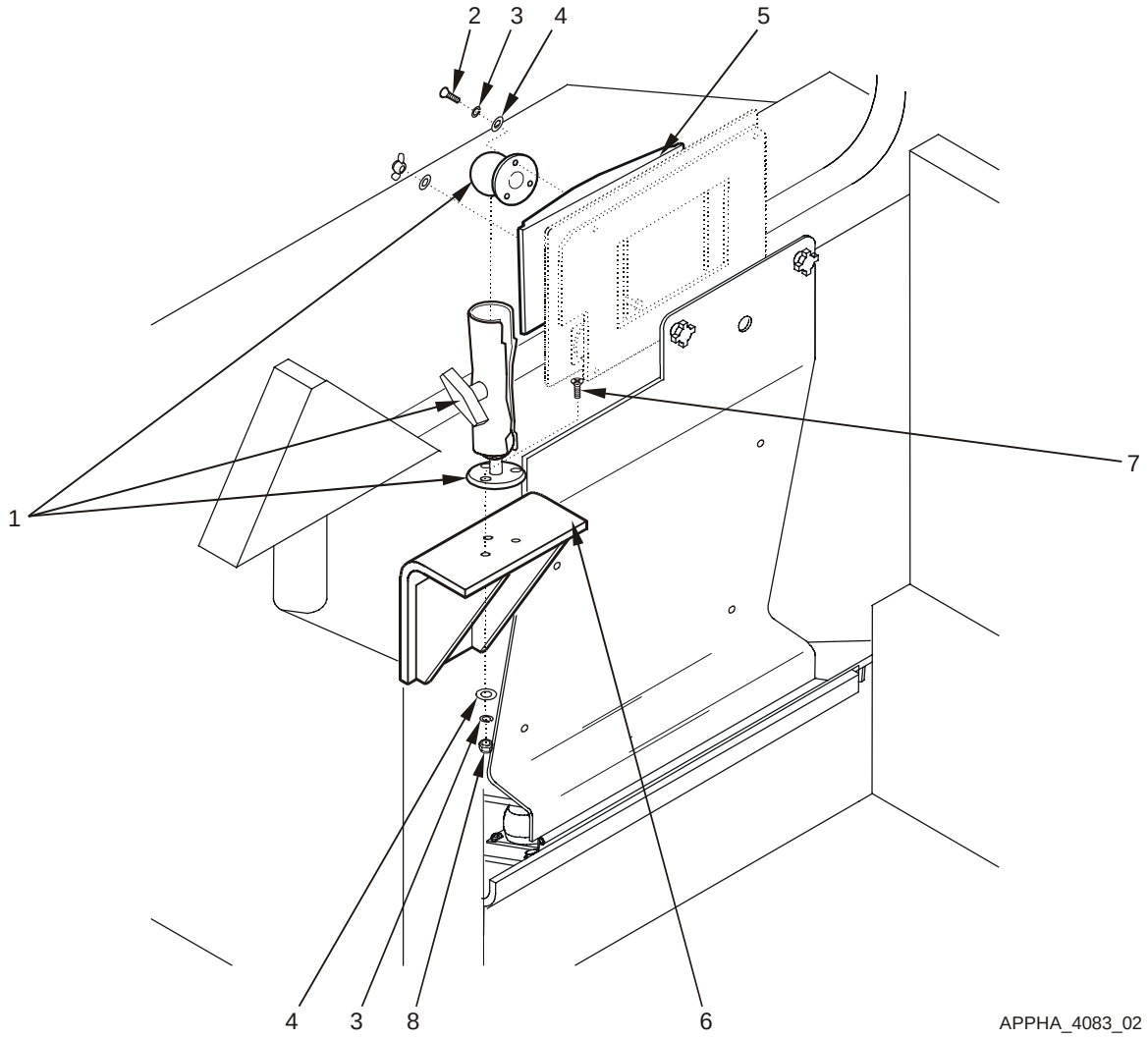

Figure F-9. Remove and Replace RAM-Ball Assembly

Key and Parts List for Figure F-9

ITEM NO.	NOMENCLATURE	CAGE CODE	PART NUMBER	NSN	QTY	SMR
1	Mount, RAM-Ball	0J198	889498-1		1	PAOZZ
2	Screw, Pan Head	96906	MS35207-264	5305-00-989-7435	3	PAOZZ
3	Washer, Lock	96906	MS35338-43	5310-00-045-3296	3	PAOZZ
4	Washer, Flat	96906	MS27183-42	5310-00-014-5850	3	PAOZZ
5	(DU mount adapter plate) Bracket, DU Mounting	0J198	872875-1		1	XBOOO
6	(DU base mount bracket) Bracket, Base, DU Mount	80212	4250181		1	XBOZZ
7	Screw, Pan Head	96906	MS35207-265	5305-00-993-1848	3	PAOZZ
8	Nut, Plain, Hexagon	96906	MS35649-202	5310-00-934-9758	3	PAOZZ
--	Intercom Set Mounting					
--	Screw, Cap, Hexagon	80204	B1821AH031C063N	5305-01-421-8446	2	PAOZZ
--	Washer, Flat	96906	MS27183-12	5310-00-081-4219	4	PAOZZ
--	Washer, Lock	96906	MS35333-41	5310-00-167-0721	2	PAOZZ
--	Nut, Plain, Hexagon	96906	MS35649-2312	5310-00-000-0981	2	PAOZZ

F–6.12 REMOVE/REPLACE KEYBOARD UNIT (KU) STOWAGE BOX

Refer to Figure F-10.

F–6.12.1 REMOVE KEYBOARD UNIT (KU) STOWAGE BOX

a. Remove keyboard from stowage box, if stowed.

b. Loosen four KU stowage box captive screws (3) until the captive screws move freely using a No. 2 cross-tip screwdriver.

c. Remove KU stowage box (2) from KU door assembly (1).

F–6.12.2 REPLACE KEYBOARD UNIT (KU) STOWAGE BOX

a. Align four KU stowage box captive screws (3) with KU door assembly (1) installation holes.

b. Tighten four captive screws (3) using a No. 2 cross-tip screwdriver.

c. Stow keyboard, if necessary.

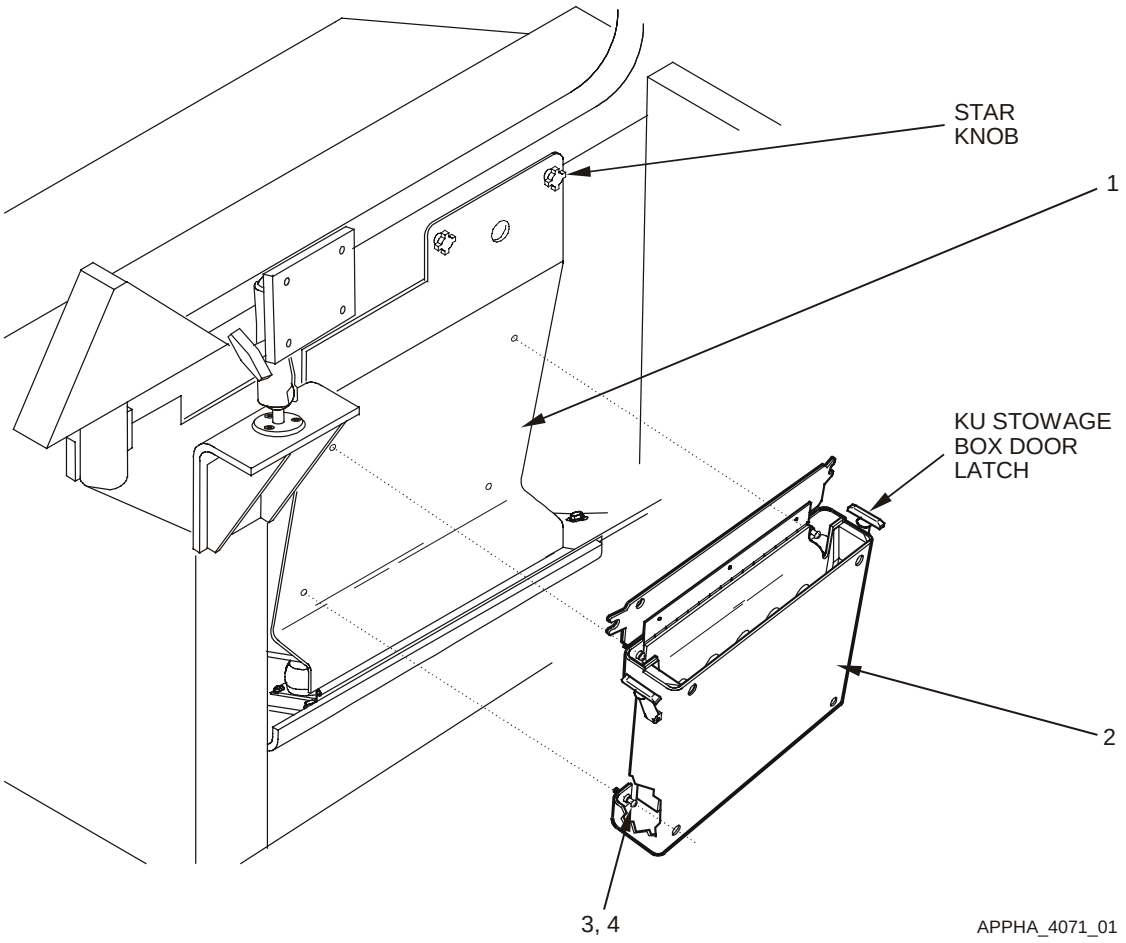

Figure F-10. Remove and Replace Keyboard Unit (KU) Stowage Box

Key and Parts List for Figure F-10

ITEM NO.	NOMENCLATURE	CAGE CODE	PART NUMBER	NSN	QTY	SMR
1	Door Assembly, KU	80212	4250187		1	XBOOO
--	Insert, Screw Thread	96906	MS51832-103	5325-00-725-1509	2	PAOZZ
2	Box, KU Stowage	0J198	872845-1	2540-01-481-5744	1	PAODD
3	Retainer, Panel Screw	57177	214-03SS10-32		4	PAOZZ
4	Screw, Captive Panel	57177	PH207-05SS1032		4	PAOZZ
--	Case, Keyboard	0J198	872845-11		1	XBOOO
--	Bottom, Stowage Box	0J198	872845-12		1	XBOOO
--	Side Rail, Keybd Box	0J198	872845-13		1	XBOOO
--	Side Rail, Keybd Box	0J198	872845-14		1	XBOOO
--	Door, Keyboard Box	0J198	872845-15		1	XBOOO
--	Hinge, Keyboard Box	0J198	872845-16		1	XBOOO
--	Strip, Rubber	0J198	872845-17		1	XBOOO
--	Rivet, Solid, Csk	96906	MS20426AD-4-5	5320-00-117-6950	6	PAOZZ
--	Label, Keyboard Box	0J198	881323-1		1	PAOZZ
--	Screw, Pan Head	96906	MS35206-229	5305-00-984-4989	14	PAOZZ
--	Washer, Flat	96906	MS27183-5	5310-00-983-8483	16	PAOZZ
--	Washer, Lock	96906	MS35338-41	5310-00-045-4007	13	PAOZZ
--	Nut, Plain	96906	MS35649-262	5310-00-934-9747	3	PAOZZ
--	Latch, Thumb	94222	37-20-071-20	5340-01-351-3340	2	PAOZZ
--	Rubber Edge Trim	39428	8507K16	5325-01-435-2840	9	PAOZZ
--	Adhesive	04963	SCOTCH-GRIP RUB	8040-00-664-4318	1	PAOZZ
--	First Aid Kit Mounting					
--	Loop, Strap Fastener	19207	10875599	5340-00-901-8124	2	PAOZZ
--	Strap, Webbing	19204	8690532	5340-00-965-7833	1	PAOZZ
--	Decal, First Aid Kit	19207	8376702	7690-00-725-5298	1	PAOZZ

F–6.13 REMOVE/REPLACE KEYBOARD UNIT (KU) STOWAGE BOX DOOR LATCHES

Refer to Figure F-11.

F–6.13.1 REMOVE KEYBOARD UNIT (KU) STOWAGE BOX DOOR LATCHES

a. Pull rubber T-handles and unfasten KU stowage box door latches, if necessary.

b. Remove two pan head screws (1), lock washers (2) and flat washers (3) from each KU stowage box door latch (4) using a No. 2 cross-tip screwdriver.

c. Remove KU stowage box door latch (4).

F–6.13.2 REPLACE KEYBOARD UNIT (KU) STOWAGE BOX DOOR LATCHES

NOTE

The same KU stowage box door latch part is used for each side of the keyboard stowage box. There is a bumper on one side of the latch that should be positioned toward the side of the keyboard stowage box when fastened.

a. Align KU stowage box door latch mounting holes with mounting holes in KU stowage box.

b. Install and tighten two pan head screws (1), lock washers (2) and flat washers (3) for each KU stowage box door latch (4), using a No. 2 cross-tip screwdriver.

c. Pull rubber T-handles and fasten KU stowage box door latches.

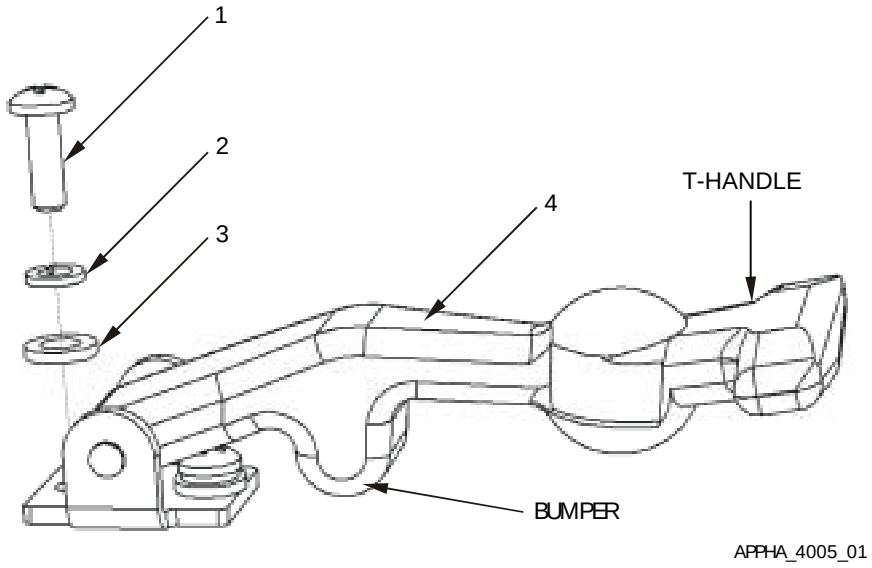

Figure F-11. Remove and Replace Keyboard Unit (KU) Stowage Box Door Latches

Key and Parts List for Figure F-11

ITEM NO.	NOMENCLATURE	CAGE CODE	PART NUMBER	NSN	QTY	SMR
1	Screw, Pan Head	96906	MS35206-229	5305-00-984-4989	4	PAOZZ
2	Washer, Lock	96906	MS35338-41	5310-00-045-4007	4	PAOZZ
3	Washer, Flat	96906	MS27183-5	5310-00-983-8483	4	PAOZZ
4	(KU stowage box door latch) Latch, Thumb	94222	37-20-071-20	5340-01-351-3340	2	PAOZZ

APPENDIX G

SUPPLEMENTARY INFORMATION FOR

M577 MORTAR - FIRE DIRECTION CENTER (FDC)

TABLE OF CONTENTS

Page

G–1 GENERAL G–3
G–2 COMPONENT ITEM NUMBERS AND PART NUMBERS G–3
G–3 SYSTEM INTERFACES G–4
G–3.1 MECHANICAL G–4
G–3.2 CABLE INTERFACES G–4
G–4 COMPONENT LOCATION G–6
G–4.1 GENERAL LOCATION G–6
G–4.2 MOUNTING G–7
G–5 PLATFORM-UNIQUE TROUBLESHOOTING G–9
G–6 REMOVAL/REPLACEMENT IN THE PLATFORM G–9
G–6.1 FUNCTIONAL CHECK G–9
G–6.2 REMOVE/REPLACE W1 POWER CABLE G–10
G–6.3 REMOVE/REPLACE W2 DISPLAY CABLE G–11
G–6.4 REMOVE/REPLACE W3 SERIAL INTERFACE ADAPTER DEVICE (SIAD) G–12
G–6.5 REMOVE/REPLACE W3P PLGR CABLE G–13
G–6.6 REMOVE/REPLACE W3N INC CABLE G–14
G–6.7 REMOVE/REPLACE W4 AUDIO CABLE G–15
G–6.8 REMOVE/REPLACE PU ISOLATION ASSEMBLY G–17
G–6.9 REMOVE/REPLACE DU ISOLATION ASSEMBLY G–20
G–6.10 REMOVE/REPLACE KEYBOARD UNIT (KU) STOWAGE BOX G–23
G–6.11 REMOVE/REPLACE KEYBOARD UNIT (KU) STOWAGE BOX DOOR LATCHES G–25

LIST OF ILLUSTRATIONS

Page
Figure G-1. Equipment Interface Block Diagram G–5
Figure G-2. Relative Component Locations G–6
Figure G-3. PU Isolation Assembly and Keyboard Stowage Box Mounting G–7
Figure G-4. DU Isolation Assembly and DU Mounting G–8
Figure G-5. Cable Run G–16
Figure G-6. Remove and Replace PU Isolation Assembly G–19
Figure G-7. Remove and Replace DU Isolation Assembly G–22
Figure G-8. Remove and Replace Keyboard Unit (KU) Stowage Box G–23
Figure G-9. Remove and Replace Keyboard Unit (KU) Stowage Box Door Latches G–26

G–1 GENERAL

This appendix describes the interfaces between the FBCB2 equipment and the M577 MORTAR Fire Direction Center (FDC). It also contains the component parts of the M577 MORTAR FDC platform installation kit and details the removal and replacement procedures peculiar to the M577 MORTAR FDC.

G–2 COMPONENT ITEM NUMBERS AND PART NUMBERS

Key and Parts List tables contained in the Removal and Replacement section of this Appendix serve a dual purpose. Use the Item Numbers in the Key to identify components and attaching hardware shown in the Figures illustrating the tasks. The nomenclature and part number for the hardware and equipment mounting components of the installation kit also are keyed to the Item Numbers in the tables. Additional parts ordering information, such as Contractor and Government Entity code (CAGE); National Stock Number (NSN); quantity; and Source, Maintenance, and Recoverability (SMR) codes, are provided. The Key and Parts List follows the task illustrations.

G–3 SYSTEM INTERFACES

G–3.1 MECHANICAL

The mechanical hardware-to-hardware interfaces include:

a. Cables

b. Processor Unit (PU)

c. Display Unit (DU)

d. Keyboard Unit (KU)

G–3.2 CABLE INTERFACES

Figure G-1 illustrates a block diagram of the interface between the FBCB2 equipment and the M577 MORTAR Fire Direction Center (FDC) (Platform). Figure G-1 also shows the signal and control interfaces including the terminal connector labels (e.g., P1, P2). The purpose of each cable is listed below:

Cable Name	Purpose
W1–Cable	Supplies vehicle power (28 VDC) to the AN/UYK-128(V) computer and its subassemblies.
W2–Cable	Supplies power and signals to the AN/UYK-128(V) display and keyboard. Returns the Man-Machine Interface (MMI) information from the keyboard to the PU.
W3–Cable	The Serial Interface Adapter Device (SIAD) is a conduit assembly that breaks out each of the serial interface ports to a connector.
W3P–Cable	Collects position and time information from the PLGR.
W3N–Cable	Provides duplex communication between the PU, Internet Controller (INC) and radios.
W4–Cable	Connects audio signals from the PU to the Intercom system and Combat Vehicle Crew (CVC) Helmet.
W5–Cable	The Expansion Interface Adapter Device (EIAD) is connected to the Universal Serial Bus (USB) connector only when this vehicle is to be used in a Tactical Operations Center (TOC) setup. When used in this configuration, the EIAD is connected between the PU J5 connector and local router.
Ground Strap	Provides safety ground for the PU.
Ground Strap	Provides safety ground for the DU.

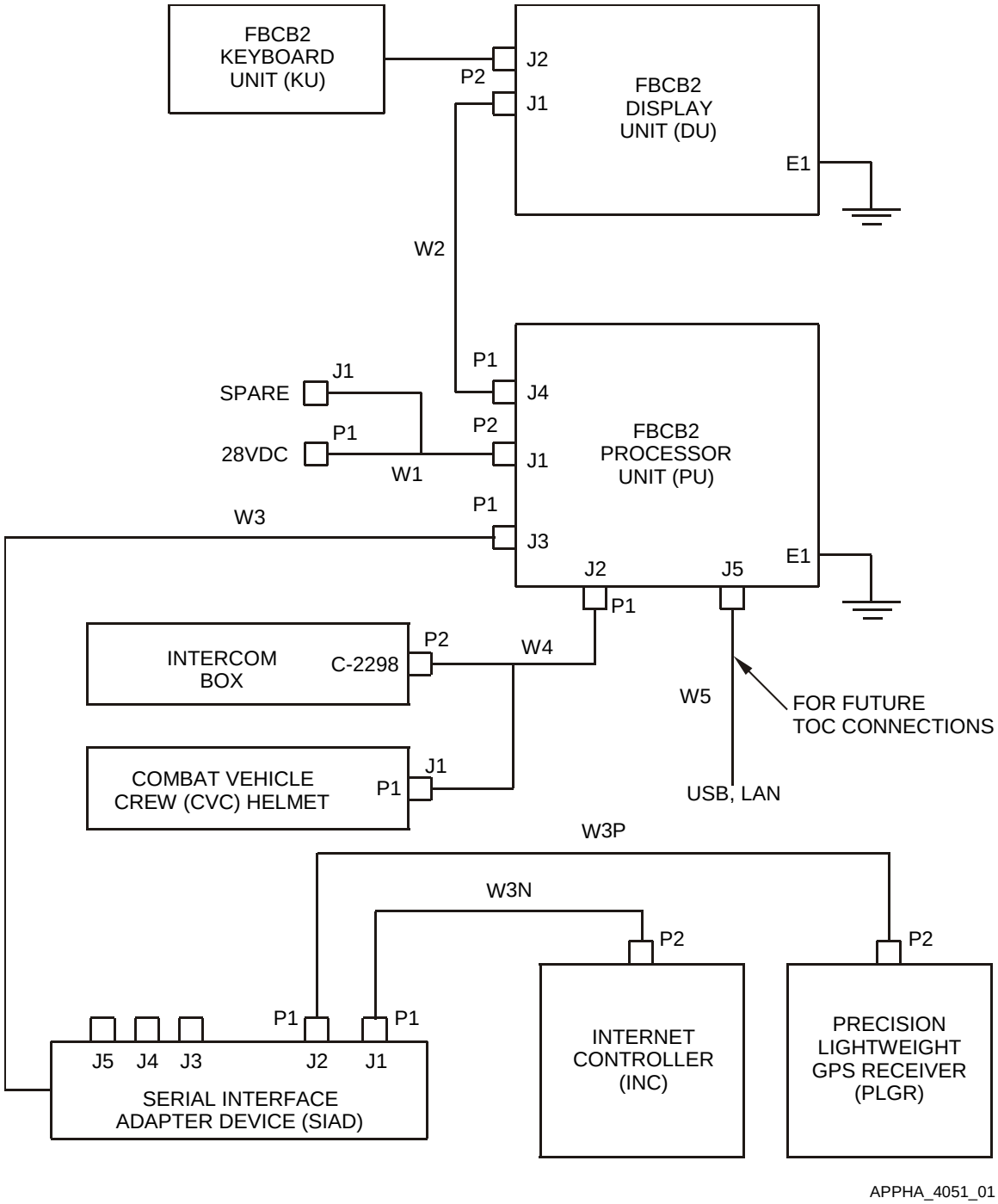

Figure G-1. Equipment Interface Block Diagram

G–4 COMPONENT LOCATION

G–4.1 GENERAL LOCATION

Figure G-2 shows the relative locations of the AN/UYK-128(V) components in the M577 MORTAR FDC.

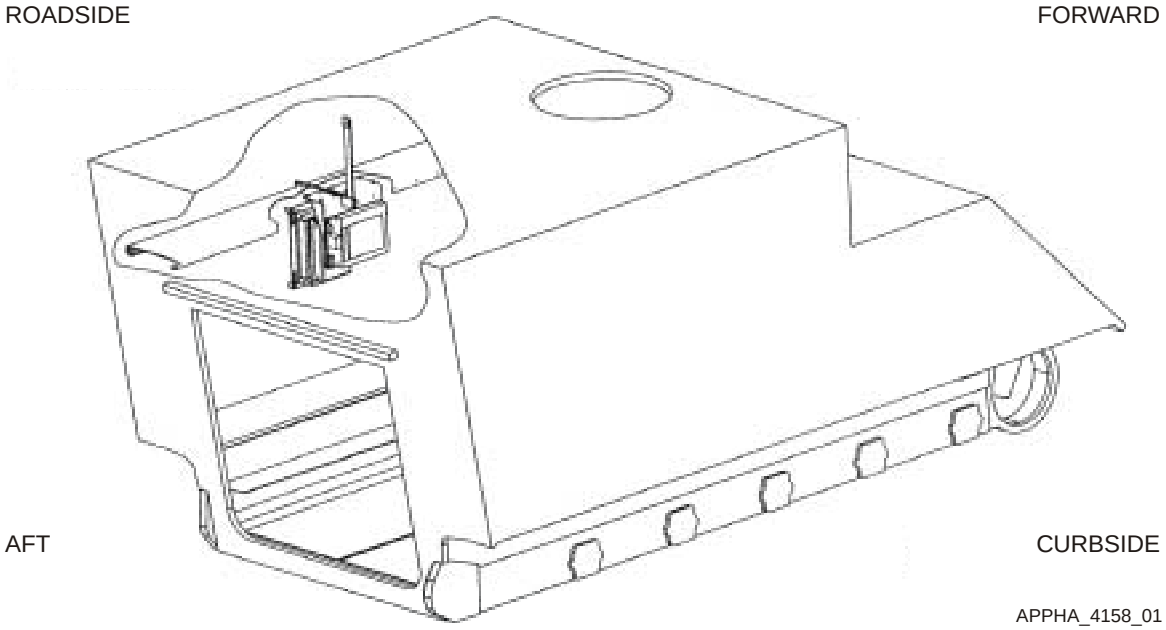

Figure G-2. Relative Component Locations

G–4.2 MOUNTING

G–4.2.1 PU AND KEYBOARD STOWAGE BOX MOUNTING

Figure G-3 shows how the PU isolation assembly is mounted on weld nuts attached directly to the vehicle wall. The PU slides onto and locks into place on the isolation assembly with the cable connectors facing up. The KU stowage box is mounted on top of the PU.

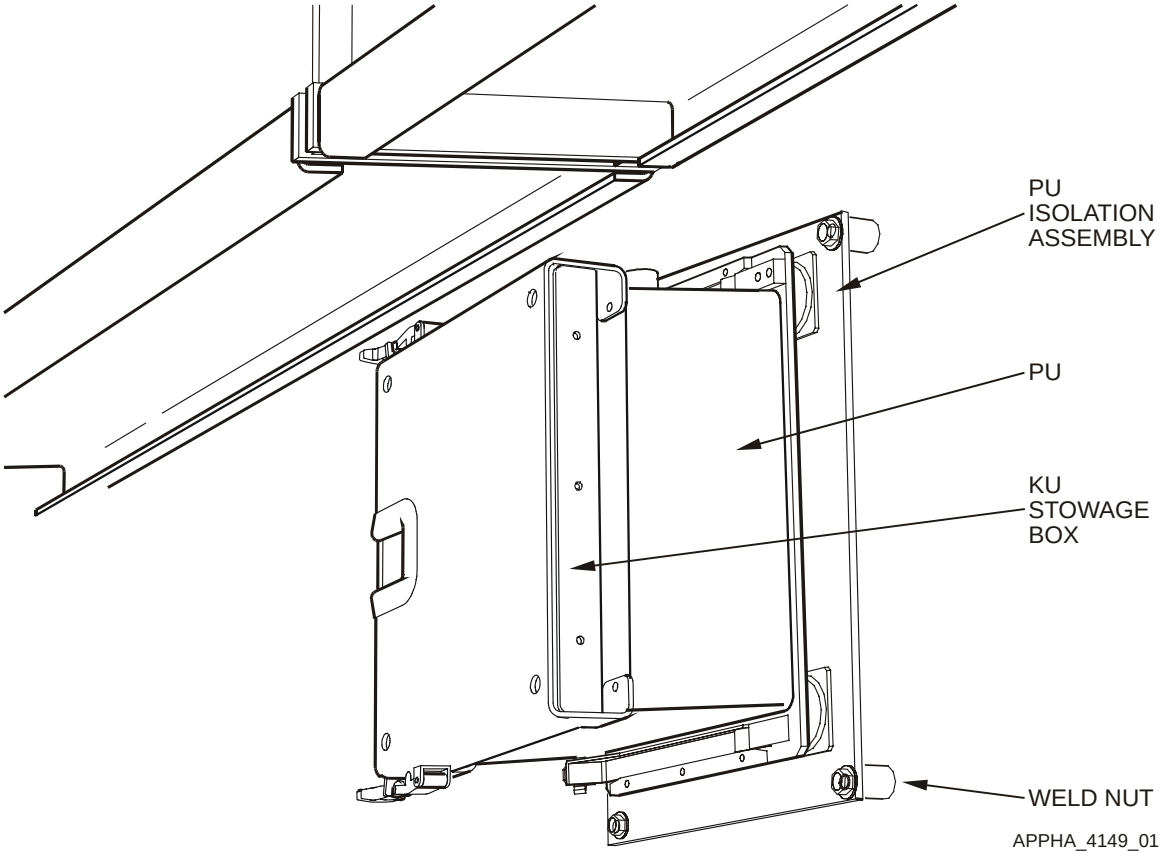

Figure G-3. PU Isolation Assembly and KU Stowage Box Mounting

G–4.2.2 DU MOUNTING

Figure G-4 illustrates how the DU and DU isolation assembly are mounted beneath the radio rack on the display bracket.

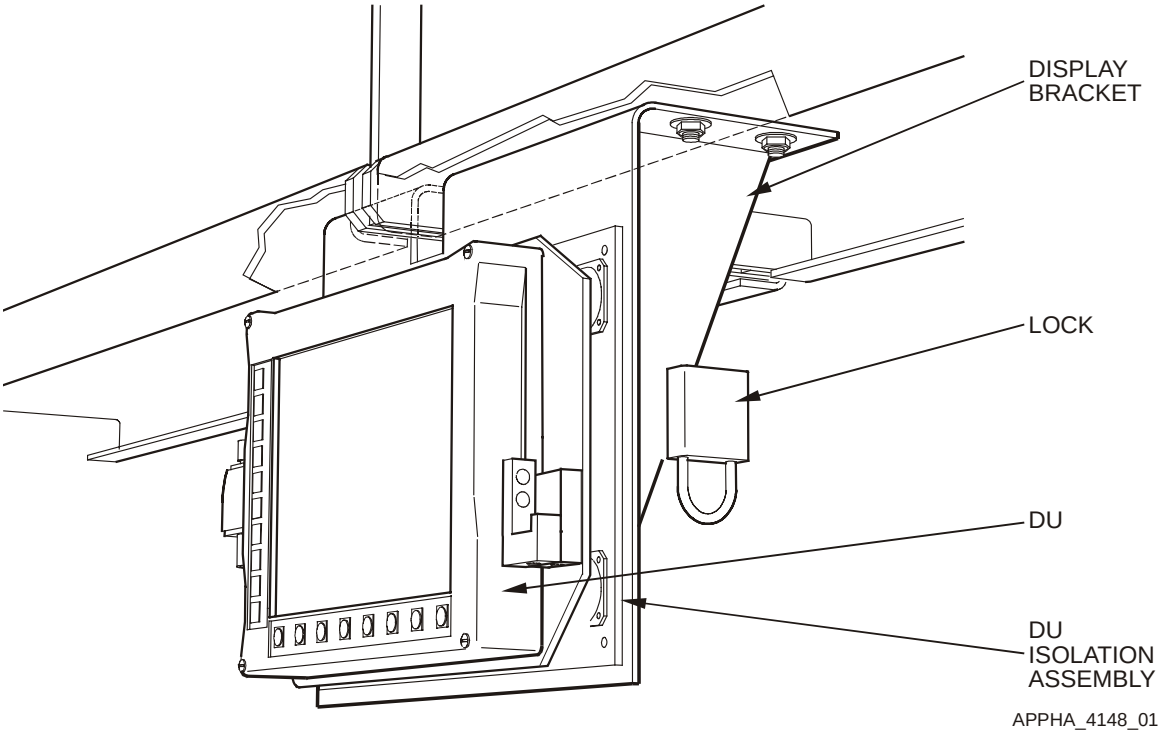

Figure G-4. DU Isolation Assembly and DU Mounting

G–5 PLATFORM-UNIQUE TROUBLESHOOTING

No unique troubleshooting procedures are required for this platform.

G–6 REMOVAL/REPLACEMENT IN THE PLATFORM

Most installations must be tailored to the platform. Cables and brackets are unique to the installation. Before a part or assembly is removed from a vehicle, fill out a “Maintenance Request” DA Form 2407. One copy of this completed form must remain with the vehicle and the remaining copies must be kept with the faulty component. To prove the operability of the system after an item is replaced, perform the system Functional Check.

G–6.1 FUNCTIONAL CHECK

G–6.1.1 POWER UP

Power up and initialize all interface equipment and the AN/UYK-128(V) In Accordance With (IAW) the Operator’s Manual TM 11-7010-326-10, or Pocket Guide TB 11-7010-326-10.

G–6.1.2 VERIFICATION

NOTE

Observe that the Display Unit PWR, DISP and CPU green LED lights are lit.

a. Observe that the PLGR synchronizes with PU, indicated by the PLGR dialog box showing green.

b. Observe that the Router synchronizes with the PU, indicated by the Router dialog box showing green.

c. At the Session Manager screen, select OPS button to display the OPS screen.

d. Verify the GPS status is either green or amber on the Classification/Status Bar.

e. Verify the Communications status is either green or amber on the Classification/Status Bar.

G–6.1.3 POWER DOWN

Power down all interface equipment and the AN/UYK-128(V) IAW the Operator’s Manual TM 11-7010-326-10, or Pocket Guide TB 11-7010-326-10.

G–6.2 REMOVE/REPLACE W1 POWER CABLE

Refer to Figure G-5.

WARNING

Before conducting maintenance involving the removal or replacement of system components, ensure that all power to the FBCB2 system is off (including power from the vehicle). Failure to comply with warning may result in equipment damage or injury to personnel.

G–6.2.1 REMOVE W1 POWER CABLE

a. Power down AN/UYK-128(V) system IAW Operator's Manual TM 11-7010-326-10, or Pocket Guide TB 11-7010-326-10.

b. Disconnect W1-P1 cable connector from vehicle utility power connector.

c. Disconnect W1-J1 cable connector from interface cable.

d. Disconnect W1-P2 cable connector from PU J1 connector.

e. Install protective cap on PU J1 connector.

NOTE

Note cable routing and tie-wrap locations before removing cable or tie-wraps.

f. Remove tie-wraps securing W1 cable using diagonal wire cutters.

g. Remove W1 cable (6).

G–6.2.2 REPLACE W1 POWER CABLE

a. Route W1 power cable (6) below the shelf as originally installed.

b. Connect W1-P1 cable connector to vehicle utility power connector.

c. Connect W1-J1 cable connector to interface cable.

d. Remove protective cap from PU J1 connector.

e. Connect W1-P2 cable connector to PU J1 connector.

f. Secure W1 power cable using tie-wraps.

g. Dress tie-wraps using diagonal wire cutters.

h. Perform Functional Check IAW paragraph G–6.1.

G–6.3 REMOVE/REPLACE W2 DISPLAY CABLE

Refer to Figure G-5.

WARNING

Before conducting maintenance involving the removal or replacement of system components, ensure that all power to the FBCB2 system is off (including power from the vehicle). Failure to comply with warning may result in equipment damage or injury to personnel.

G–6.3.1 REMOVE W2 DISPLAY CABLE

a. Power down AN/UYK-128(V) system IAW Operator's Manual TM 11-7010-326-10, or Pocket Guide TB 11-7010-326-10.

b. Disconnect W2-P1 cable connector from PU J4 connector.

c. Install protective cap on PU J4 connector.

d. Disconnect W2-P2 cable connector from display J1 connector.

e. Install protective cap on display J1 connector.

NOTE

Note cable routing and tie-wrap locations before removing cable or tie-wraps. W2 display cable wraps around bottom of PU and then bridges over to DU.

f. Remove tie-wraps from cable and ground strap using diagonal wire cutters.

g. Remove W2 cable (5).

G–6.3.2 REPLACE W2 DISPLAY CABLE

a. Route W2 cable (5) along original cable path around and under PU.

b. Remove protective cap from display J1 connector.

c. Connect W2-P2 cable connector to display J1 connector.

d. Remove protective cap from PU J4 connector.

e. Connect W2-P1 cable connector to PU J4 connector.

NOTE

When securing cables, make certain cable bundle does not block access to KU stowage box door.

f. Secure W2 display cable and ground strap using tie-wraps.

g. Dress tie-wraps using diagonal wire cutters.

h. Perform Functional Check IAW paragraph G–6.1.

G–6.4 REMOVE/REPLACE W3 SERIAL INTERFACE ADAPTER DEVICE (SIAD)

Refer to Figure G-5.

G–6.4.1 REMOVE W3 SERIAL INTERFACE ADAPTER DEVICE (SIAD)

WARNING

Before conducting maintenance involving the removal or replacement of system components, ensure that all power to the FBCB2 system is off (including power from the vehicle). Failure to comply with warning may result in equipment damage or injury to personnel.

a. Power down AN/UYK-128(V) system IAW Operator's Manual TM 11-7010-326-10, or Pocket Guide TB 11-7010-326-10.

b. Disconnect W3N-P1 INC cable connector from W3 SIAD J1 connector.

c. Disconnect W3P-P1 PLGR cable connector from W3 SIAD J2 connector.

d. Disconnect W3 SIAD P1 cable connector from PU J3 connector.

e. Install protective cap on PU J3 connector.

NOTE

Note cable routing and tie-wrap locations before removing cable or tie-wraps.

f. Remove tie-wraps securing W3 SIAD using diagonal wire cutters.

g. Remove W3 SIAD (1).

G–6.4.2 REPLACE W3 SERIAL INTERFACE ADAPTER DEVICE (SIAD)

a. Route W3 SIAD (1) into original position.

b. Remove protective cap from PU J3 connector.

c. Connect W3 SIAD P1 cable connector to PU J3 connector.

d. Connect W3P-P1 PLGR cable connector to W3 SIAD J2 connector.

e. Connect W3N-P1 INC cable connector to W3 SIAD J1 connector.

f. Secure W3 SIAD using tie-wraps.

g. Dress tie-wraps using diagonal wire cutters.

h. Perform Functional Check IAW paragraph G–6.1.

G–6.5 REMOVE/REPLACE W3P PLGR CABLE

Refer to Figure G-5.

G–6.5.1 REMOVE W3P PLGR CABLE

WARNING

Before conducting maintenance involving the removal or replacement of system components, ensure that all power to the FBCB2 system is off (including power from the vehicle). Failure to comply with warning may result in equipment damage or injury to personnel.

a. Power down AN/UYK-128(V) system IAW Operator's Manual TM 11-7010-326-10, or Pocket Guide TB 11-7010-326-10.

b. Disconnect W3P-P1 cable connector from W3 SIAD J2 connector.

c. Unfasten over-center latch and remove PLGR from mounting rack.

d. Disconnect W3P-P2 cable connector from PLGR J2 connector using an offset flat-tip screwdriver.

NOTE

Note cable routing and tie-wrap locations before removing cable or tie-wraps.

e. Remove tie-wraps securing W3P cable using diagonal wire cutters.

f. Remove W3P cable (3).

G–6.5.2 REPLACE W3P PLGR CABLE

a. Route W3P cable (3) as originally installed.

b. Connect W3P-P2 cable connector to PLGR J2 connector using an offset flat-tip screwdriver.

c. Install PLGR into mounting rack and fasten over-center latch.

d. Connect W3P-P1 cable connector to W3 SIAD J2 connector.

e. Secure W3P cable using tie-wraps.

f. Dress tie-wraps using diagonal wire cutters.

g. Perform Functional Check IAW paragraph G–6.1.

G–6.6 REMOVE/REPLACE W3N INC CABLE

Refer to Figure G-5.

G–6.6.1 REMOVE W3N INC CABLE

WARNING

Before conducting maintenance involving the removal or replacement of system components, ensure that all power to the FBCB2 system is off (including power from the vehicle). Failure to comply with warning may result in equipment damage or injury to personnel.

a. Power down AN/UYK-128(V) system IAW Operator's Manual TM 11-7010-326-10, or Pocket Guide TB 11-7010-326-10.

b. Ensure SINCGARS Vehicle Amplifier-Adapter power light is off. If power light is on, power down SINCGARS IAW TM 5820-890-10-8.

c. Disconnect W3N-P1 cable connector from W3 SIAD J1connector.

d. Disconnect W3N-P2 cable connector from SINCGARS INC A2-J6 connector.

NOTE

Note cable routing and tie-wrap locations before removing cable or tie-wraps.

e. Remove tie-wraps securing W3N cable using diagonal cutters.

f. Remove W3N cable (2).

G–6.6.2 REPLACE W3N INC CABLE

a. Route W3N cable (2) as originally installed.

b. Connect W3N-P2 cable connector to SINCGARS INC A2-J6 connector.

c. Connect W3N-P1 cable connector to W3 SIAD J1 connector.

d. Secure W3N cable using tie-wraps.

e. Dress tie-wraps using diagonal wire cutters.

f. Perform Functional Check IAW paragraph G–6.1.

G–6.7 REMOVE/REPLACE W4 AUDIO CABLE

Refer to Figure G-5.

G–6.7.1 REMOVE W4 AUDIO CABLE

WARNING

Before conducting maintenance involving the removal or replacement of system components, ensure that all power to the FBCB2 system is off (including power from the vehicle). Failure to comply with warning may result in equipment damage or injury to personnel.

a. Power down AN/UYK-128(V) system IAW Operator's Manual TM 11-7010-326-10, or Pocket Guide TB 11-7010-326-10.

b. Disconnect W4-P1 cable connector from PU J2 connector.

c. Install protective cap on PU J2 connector.

d. Disconnect W4-P2 cable connector from the Full Function Crew Station (FFCS) connector.

e. Disconnect W4-J1 cable connector from Combat Vehicle Crew (CVC) helmet P1 connector.

NOTE

Note cable routing and tie-wrap locations before removing cable or tie-wraps.

f. Remove tie-wraps securing W4 cable using diagonal wire cutters.

g. Remove W4 cable (4).

G–6.7.2 REPLACE W4 AUDIO CABLE

a. Route W4 cable (4).

b. Connect W4-J1 cable connector to CVC helmet P1 connector.

c. Connect W4-P2 cable connector to the Full Function Crew Station connector.

d. Remove protective cap from PU J2 connector.

e. Connect W4-P1 cable connector to PU J2 connector.

f. Secure W4 cable using tie-wraps.

g. Dress tie-wraps using diagonal wire cutters.

h. Perform Functional Check IAW paragraph G–6.1.

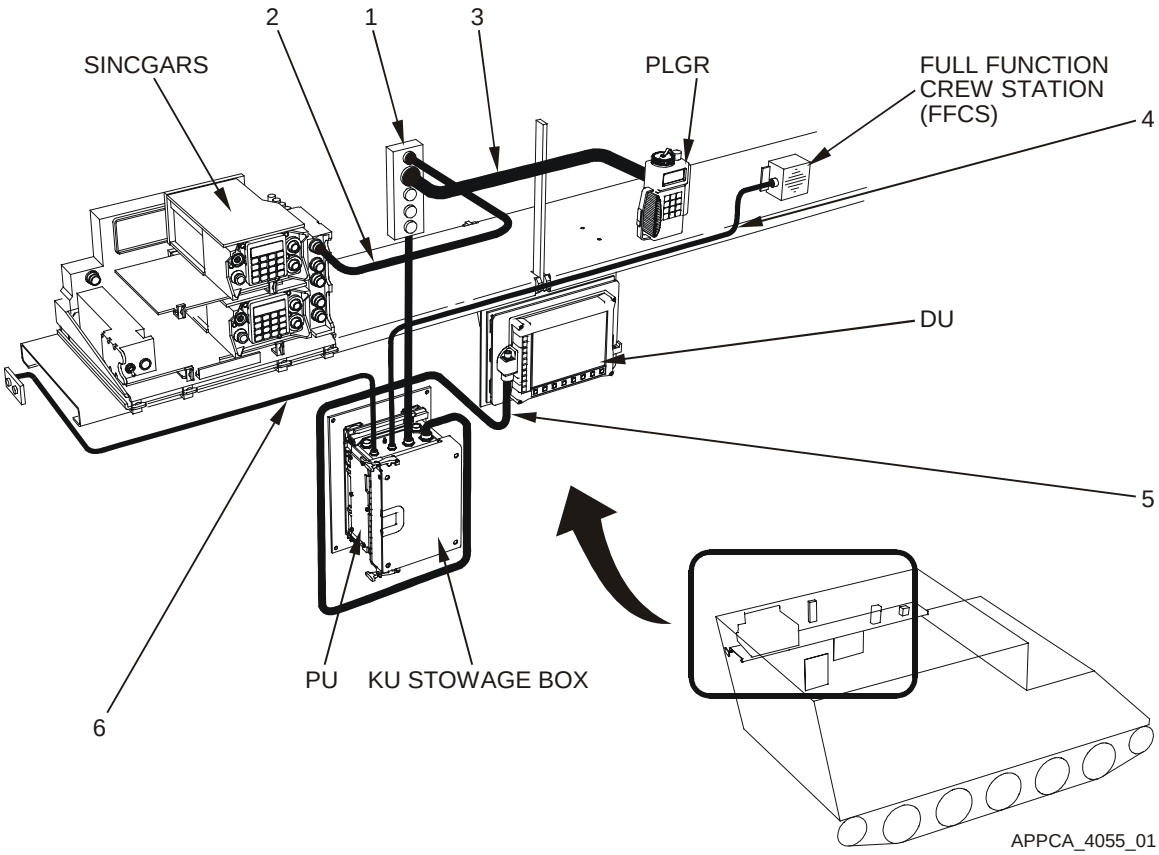

Figure G-5. Cable Run

Key and Parts List for Figure G-5

ITEM NO.	NOMENCLATURE	CAGE CODE	PART NUMBER	NSN	QTY	SMR
1	Adapter Assy SIAD W3	0J198	881331-1	4920-01-478-3722		PAODD
2	Cable Assembly W3N	0J198	881336-1	5995-01-478-4913		PAODD
3	Cable Assembly W3P	0J198	881335-2	5995-01-478-4893		PAODD
4	Cable Assembly W4	0J198	881270-4	5995-01-478-5081		PAODD
5	Cable Assembly W2	0J198	881327-2	5995-01-478-4873		PAODD
6	Cable Assembly W1	0J198	861882-1	5995-01-478-4890		PAODD
--	Strap, Tie Down, Elect	39428	7130K31		A/R	PAOZZ

G–6.8 REMOVE/REPLACE PU ISOLATION ASSEMBLY

Refer to Figure G-6.

NOTE

Ground straps are attached to components at one end (PU and DU) and a frame ground at the other end. Regardless of where the ground strap terminates, it is usually a burnished (void of paint) area. If the ground strap is removed from a burnished area make sure to return it to the same burnished area. Where applicable, always connect the ground strap first when assembling and disconnect the ground strap last when disassembling.

G–6.8.1 REMOVE PU ISOLATION ASSEMBLY

WARNING

Before conducting maintenance involving the removal or replacement of system components, ensure that all power to the FBCB2 system is off (including power from the vehicle). Failure to comply with warning may result in equipment damage or injury to personnel.

a. Power down AN/UYK-128(V) system IAW Operator's Manual TM 11-7010-326-10, or Pocket Guide TB 11-7010-326-10.

b. Remove KU from KU stowage box.

NOTE

Do not remove the Removable Hard Disk Drive Cartridge (RHDDC), locking bracket, or KU stowage box from PU.

c. Remove PU IAW Unit Maintenance Manual TM 11-7010-326-20&P, Chapter 2.

d. Remove one hex head screw (2), lock washer (3), flat washer (4) and ground strap from PU isolation assembly bottom plate and mounting weldnut using a 7/16" socket with ratchet and 3" extension.

e. Remove remaining three hex head screws (2), lock washers (3) and flat washers from PU isolation assembly bottom plate and mounting weldnuts using a 7/16" socket with ratchet and 3" extension.

f. Remove PU isolation assembly from weldnuts.

G–6.8.2 REPLACE PU ISOLATION ASSEMBLY

a. Align four holes in PU isolation assembly bottom plate with installation weldnuts.

b. Ensure PU self-locking retainers face rear of vehicle as shown in Figure G-6.

NOTE

To ensure positive ground, PU ground strap must make direct contact with bare metal. Ensure PU ground strap is installed in its original location at PU isolation assembly bottom plate mounting hole. Slip lock washer, flat washer and ground strap on mounting screw before installing in installation hole.

c. Install one hex head screw (2), lock washer (3), flat washer (4) and ground strap in PU isolation assembly bottom plate and weldnut using a 7/16” socket with ratchet and 3” extension.

d. Install remaining three hex head screws (2), lock washers (3) and flat washers (4) in PU isolation assembly bottom plate and weldnuts using a 7/16” socket with ratchet and 3” extension.

e. Install PU IAW Unit Maintenance Manual TM 11-7010-326-20&P, Chapter 2.

f. Perform Functional Check IAW paragraph G–6.1.

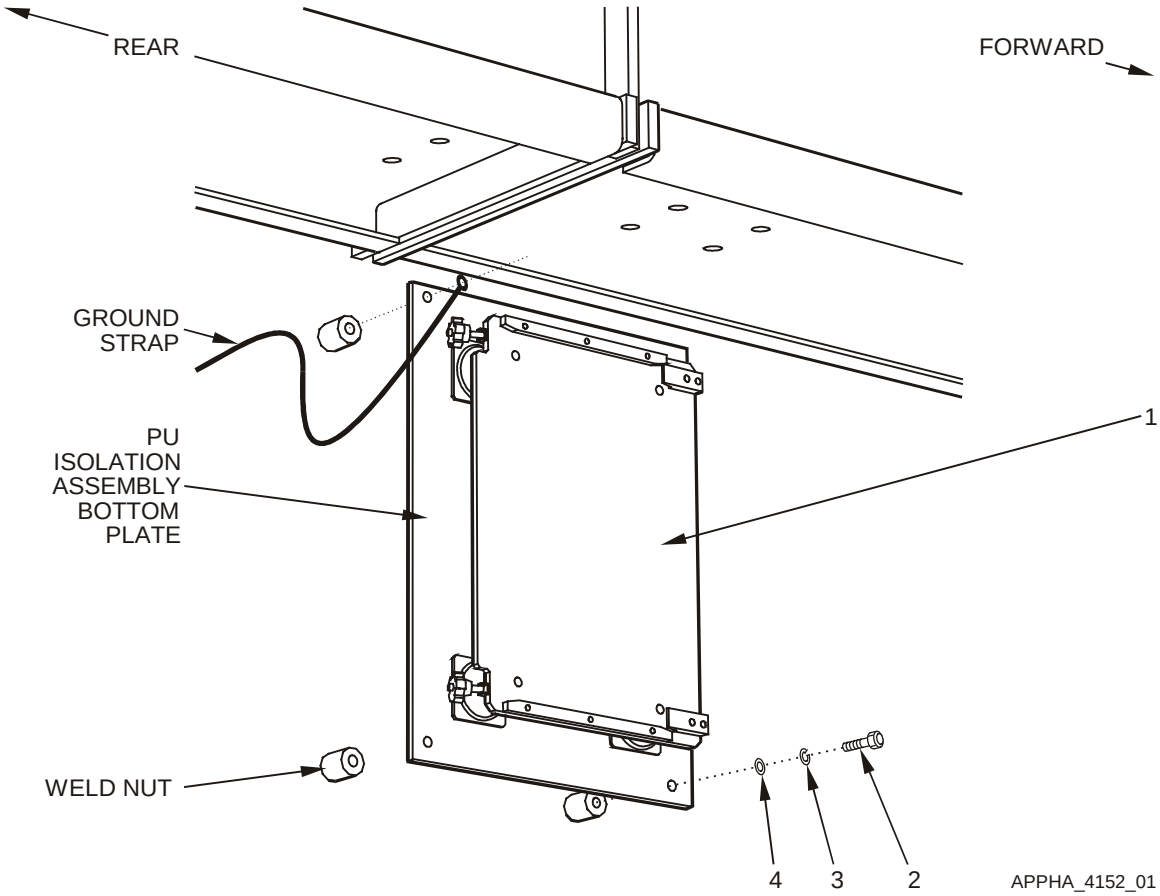

Figure G-6. Remove and Replace PU Isolation Assembly

Key and Parts List for Figure G-6

ITEM NO.	NOMENCLATURE	CAGE CODE	PART NUMBER	NSN	QTY	SMR
1	(PU Isolation Assembly) Plate, Resilient Mount PU	0J198	872826-1	5340-01-481-5742	1	PAODD
2	Screw, Cap, Hex Head	80204	B1821AH025C100N	5305-01-389-7984	4	PAOZZ
3	Washer, Lock	96906	MS35338-44	5310-00-582-5965	4	PAOZZ
4	Washer, Flat	96906	MS27183-10	5310-00-809-4058	4	PAOZZ
--	Assembly, PU Lock	0J198	861865-1		1	XBOOO
--	Bracket, Locking	0J198	861871-1		1	XBOZZ
--	Screw	80205	MS35190-253	5305-00-059-4568	2	PAOZZ

G–6.9 REMOVE/REPLACE DU ISOLATION ASSEMBLY

Refer to Figure G-7.

NOTE

Ground straps are attached to components at one end (PU and DU) and a frame ground at the other end. Regardless of where the ground strap terminates, it is usually a burnished (void of paint) area. If the ground strap is removed from a burnished area, make sure to return it to the same burnished area. Where applicable, always connect the ground strap first when assembling and disconnect the ground strap last when disassembling.

G–6.9.1 REMOVE DU ISOLATION ASSEMBLY

WARNING

Before conducting maintenance involving the removal and replacement of system components, ensure that all power to the FBCB2 system is off (including power from the vehicle). Failure to comply with warning may result in equipment damage or injury to personnel.

a. Power down AN/UYK-128(V) system IAW Operator's Manual TM 11-7010-326-10, or Pocket Guide TB 11-7010-326-10.

b. Remove DU IAW Unit Maintenance Manual TM 11-7010-326-20&P, Chapter 2.

NOTE

Note cable routing and tie-wrap locations before removing cable or tie-wraps.

c. Remove tie-wraps securing W2 display cable and ground strap to display isolation assembly using diagonal wire cutters as required.

NOTE

Ensure support is provided to display isolation assembly while removing the last two screws.

d. Remove four hex head screws (3), flat washers (4), lock washers (5) and hex nuts (6) from display isolation assembly bottom plate and display bracket using a 7/16" socket with ratchet, 3" extension and a 7/16" open-end wrench.

e. Remove display isolation assembly from display bracket.

G–6.9.2 REPLACE DU ISOLATION ASSEMBLY

NOTE

Ensure support is provided to display isolation assembly while installing the first two screws.

a. Align holes in display isolation assembly bottom plate with installation holes in display bracket.

b. Install four hex head screws (3), flat washers (4), lock washers (5) and hex nuts (6) using a 7/16” socket with ratchet, 3” extension and a 7/16” open-end wrench.

c. Secure W2 cable and ground strap to DU isolation assembly (2) bottom plate using tie-wraps.

d. Dress tie-wraps using diagonal wire cutters.

e. Install DU IAW Unit Maintenance Manual TM 11-7010-326-20&P, Chapter 2.

f. Perform Functional Check IAW paragraph G–6.1.

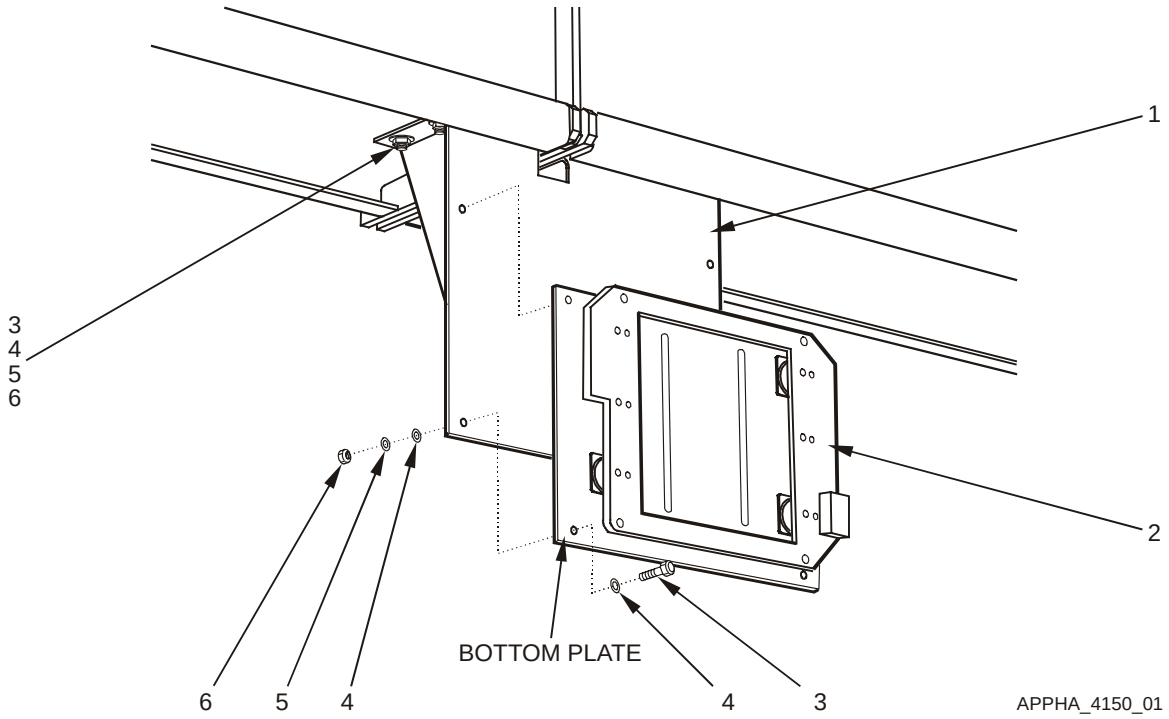

Figure G-7. Remove and Replace DU Isolation Assembly

Key and Parts List for Figure G-7

ITEM NO.	NOMENCLATURE	CAGE CODE	PART NUMBER	NSN	QTY	SMR
1	Bracket, Display	80212	4250116		1	XBOZZ
2	(DU isolation assembly) Plate, Resilient Mount DU	0J198	872871-1	5340-01-481-5743	1	PAODD
3	Screw, Cap, Hexagon	80204	B1821AH025C100N	5305-01-389-7984	12	PAOZZ
4	Washer, Flat	96906	MS27183-10	5310-00-809-4058	24	PAOZZ
5	Washer, Lock	96906	MS35338-44	5310-00-582-5965	12	PAOZZ
6	Nut, Plain, Hexagon	96906	MS35649-2252	5310-00-997-1888	12	PAOZZ
--	Assembly, Lock DU	0J198	872843-1		1	XBOOO
--	Bracket, Locking	0J198	861871-3		1	XBOZZ
--	Screw	80205	MS35190-253	5305-00-059-4568	2	PAOZZ
--	Washer, Lock	96906	MS35338-42	5310-00-045-3299	2	PAOZZ

G–6.10 REMOVE/REPLACE KEYBOARD UNIT (KU) STOWAGE BOX

Refer to Figure G-8.

U

G–6.10.1 REMOVE KEYBOARD UNIT (KU) STOWAGE BOX

a. Remove KU from stowage box if necessary.

b. Loosen four captive screws (2) on KU stowage box until captive screws move freely using a No. 2 cross-tip screwdriver.

c. Remove KU stowage box (1) from PU.

G–6.10.2 REPLACE KEYBOARD UNIT (KU) STOWAGE BOX

a. Align four captive screws (2) on KU stowage box with PU installation holes.

b. Tighten four captive screws using a No. 2 cross-tip screwdriver.

c. Stow KU as required.

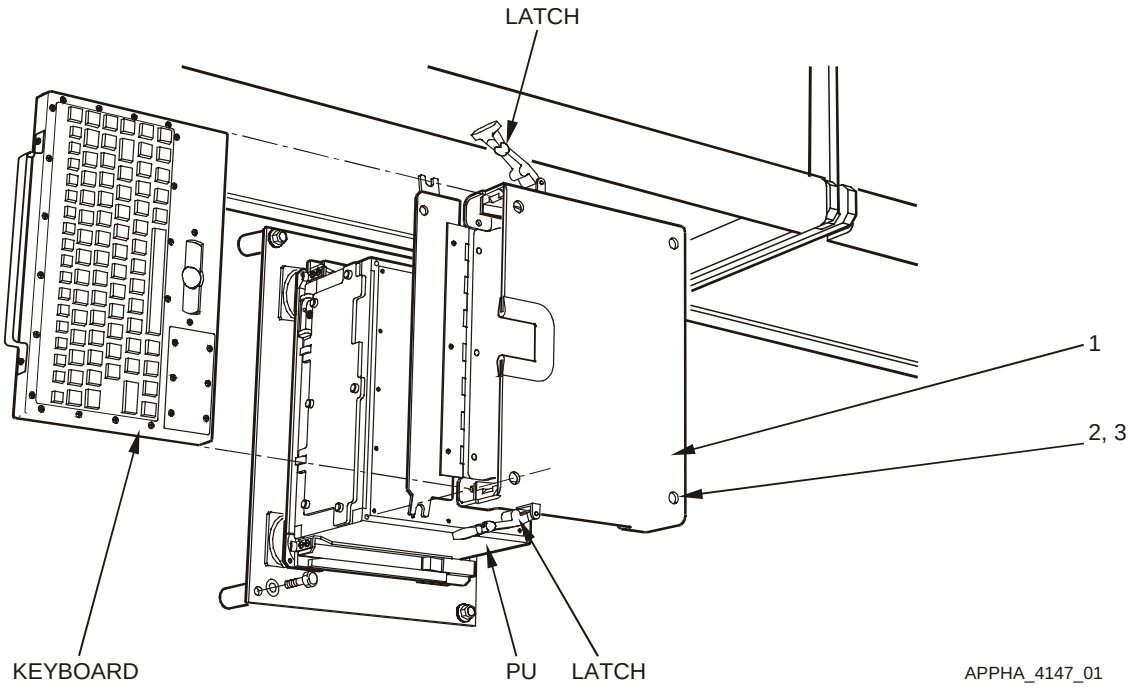

Figure G-8. Remove and Replace Keyboard Unit (KU) Stowage Box

Key and Parts List for Figure G-8

ITEM NO.	NOMENCLATURE	CAGE CODE	PART NUMBER	NSN	QTY	SMR
1	Box, KU Stowage	0J198	872845-1	2540-01-481-5744	1	PAODD
2	Screw, Captive Panel	57177	PH207-05SS1032		4	PAOZZ
3	Retainer, Panel Screw	57177	214-03SS10-32		4	PAOZZ
--	Case, Keyboard	0J198	872845-11		1	XBOOO
--	Bottom, Stowage Box	0J198	872845-12		1	XBOOO
--	Side Rail, Keybd Box	0J198	872845-13		1	XBOOO
--	Side Rail, Keybd Box	0J198	872845-14		1	XBOOO
--	Door, Keyboard Box	0J198	872845-15		1	XBOOO
--	Hinge, Keyboard Box	0J198	872845-16		1	XBOOO
--	Strip, Rubber	0J198	872845-17		1	XBOOO
--	Rivet, Solid, Csk	96906	MS20426AD-4-5	5320-00-117-6950	6	PAOZZ
--	Label, Keyboard Box	0J198	881323-1		1	PAOZZ
--	Screw, Pan Head	96906	MS35206-229	5305-00-984-4989	10	PAOZZ
--	Washer, Flat	96906	MS27183-5	5310-00-983-8483	12	PAOZZ
--	Washer, Lock	96906	MS35338-41	5310-00-045-4007	10	PAOZZ
--	Nut, Plain	96906	MS35649-262	5310-00-934-9747	3	PAOZZ
--	Rubber Edge Trim	39428	8507K16	5325-01-435-2840	9	PAOZZ
--	Adhesive	04963	SCOTCH-GRIP RUB	8040-00-664-4318	1	PAOZZ
--	Grip, Handle Assembly	0J198	861867-1		1	XBOOO
--	Grip, Handle	0J198	861869-1		1	XBOZZ
--	Screw, Machine	96906	MS35206-228	5305-00-984-4988	4	PAOZZ
--	Washer, Lock	96906	MS35338-41	5310-00-045-4007	4	PAOZZ
--	Tape, Shielding, Elect	39428	7648A34		1	XBOZZ

G–6.11 REMOVE/REPLACE KEYBOARD UNIT (KU) STOWAGE BOX DOOR LATCHES

Refer to Figure G-9.

NOTE

This remove/replace procedure does not require system power down. KU does not have to be removed to replace the latches.

G–6.11.1 REMOVE KEYBOARD UNIT (KU) STOWAGE BOX DOOR LATCHES

a. Pull rubber T-handles and unfasten KU stowage box door latches, if necessary.

b. Remove two pan head screws (1), lock washers (2) and flat washers (3) from each KU stowage box door latch (4) using a No. 2 cross-tip screwdriver.

c. Remove KU stowage box door latch (4).

G–6.11.2 REPLACE KEYBOARD UNIT (KU) STOWAGE BOX DOOR LATCHES

NOTE

The same KU stowage box door latch part is used for each side of the KU stowage box. Position the bumper on one side of the latch so that it is toward the side of the KU stowage box when fastened.

a. Align holes in stowage box door latch with installation holes in KU stowage box.

b. Install and tighten two pan head screws (1), lock washers (2) and flat washers (3) for each KU stowage box door latch (4), using a No. 2 cross-tip screwdriver.

c. Pull rubber T-handles and fasten KU stowage box door latches.

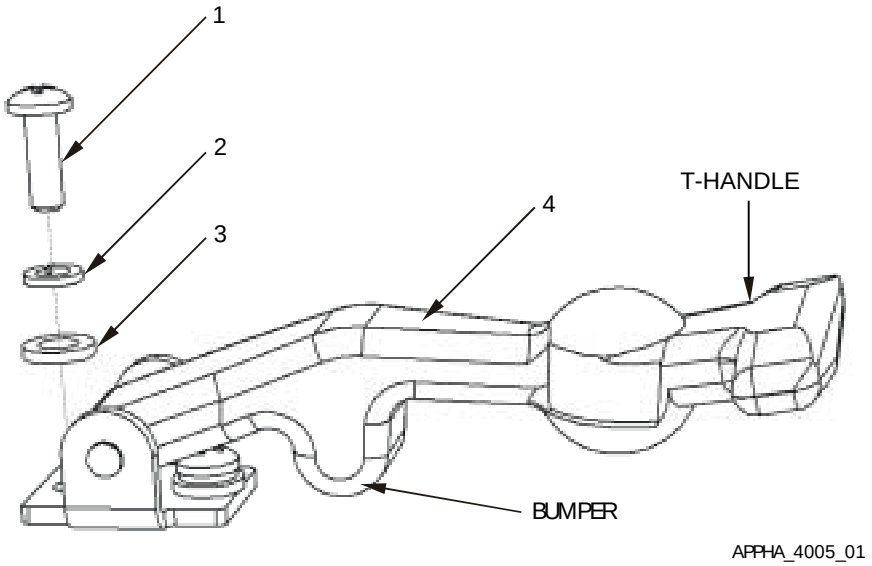

Figure G-9. Remove and Replace Keyboard Unit (KU) Stowage Box Door Latches

Key and Parts List for Figure G-9

ITEM NO.	NOMENCLATURE	CAGE CODE	PART NUMBER	NSN	QTY	SMR
1	Screw, Pan Head	96906	MS35206-229	5305-00-984-4989	4	PAOZZ
2	Washer, Lock	96906	MS35338-41	5310-00-045-4007	4	PAOZZ
3	Washer, Flat	96906	MS27183-5	5310-00-983-8483	4	PAOZZ
4	(KU Stowage Box Door Latch) Latch, Thumb	94222	37-20-071-20	5340-01-351-3340	2	PAOZZ

APPENDIX H

SUPPLEMENTARY INFORMATION FOR

M577 MEDICAL

TABLE OF CONTENTS

Page
H–1 GENERAL H–3
H–2 COMPONENT ITEM NUMBERS AND PART NUMBERS H–3
H–3 SYSTEM INTERFACES H–4
H–3.1 MECHANICAL H–4
H–3.2 CABLE INTERFACES H–4
H–4 COMPONENT LOCATION H–6
H–4.1 GENERAL LOCATION H–6
H–4.2 MOUNTING H–7
H–5 PLATFORM-UNIQUE TROUBLESHOOTING H–8
H–6 REMOVAL/REPLACEMENT IN THE PLATFORM H–8
H–6.1 FUNCTIONAL CHECK H–8
H–6.2 REMOVE/REPLACE W1 POWER CABLE H–9
H–6.3 REMOVE/REPLACE W2 DISPLAY CABLE H–10
H–6.4 REMOVE/REPLACE W3 SERIAL INTERFACE ADAPTER DEVICE (SIAD) H–11
H–6.5 REMOVE/REPLACE W3P PLGR CABLE H–12
H–6.6 REMOVE/REPLACE W3N INC CABLE H–13
H–6.7 REMOVE/REPLACE W4 AUDIO CABLE H–14
H–6.8 REMOVE/REPLACE PU ISOLATION ASSEMBLY H–16
H–6.9 REMOVE/REPLACE DU ISOLATION ASSEMBLY H–19
H–6.10 REMOVE/REPLACE RAM-BALL ASSEMBLY H–23
H–6.11 REMOVE/REPLACE KEYBOARD UNIT (KU) STOWAGE BOX H–27
H–6.12 REMOVE/REPLACE KEYBOARD UNIT (KU) STOWAGE BOX DOOR LATCHES H–30

LIST OF ILLUSTRATIONS

Page
Figure H-1. Equipment Interface Block Diagram H–5
Figure H-2. Relative Component Locations H–6
Figure H-3. Equipment Mounting Curbside in M577 MEDICAL H–7
Figure H-4. Cable Run H–15
Figure H-5. Remove and Replace PU Isolation Assembly H–18
Figure H-6. Remove and Replace DU Isolation Assembly H–21
Figure H-7. Remove and Replace RAM-Ball Assembly H–25
Figure H-8. Remove and Replace Keyboard Unit (KU) Stowage Box H–28
Figure H-9. Remove and Replace Keyboard Unit (KU) Stowage Box Door Latches H–31

H–1 GENERAL

This appendix describes the interfaces between the FBCB2 equipment and the M577 MEDICAL. This appendix also identifies the component parts of the M577 MEDICAL platform installation kit and details the removal and replacement procedures particular to the M577 MEDICAL.

H–2 COMPONENT ITEM NUMBERS AND PART NUMBERS

Key and Parts List tables contained in the Removal and Replacement section of this Appendix serve a dual purpose. Use the Item Numbers in the Key to identify components and attaching hardware shown in the Figures illustrating the tasks. The nomenclature and part number for the hardware and equipment mounting components of the installation kit also are keyed to the Item Numbers in the tables. Additional parts ordering information, such as Contractor and Government Entity code (CAGE); National Stock Number (NSN); quantity; and Source, Maintenance and Recoverability (SMR) codes, are provided. The Key and Parts List follow the task illustrations.

H–3 SYSTEM INTERFACES

H–3.1 MECHANICAL

The mechanical hardware-to-hardware interfaces include:

a. Cables

b. Processor Unit (PU)

c. Display Unit (DU)

d. Keyboard Unit (KU)

H–3.2 CABLE INTERFACES

Figure H-1 illustrates a block diagram of the interface between the FBCB2 equipment and the M577 MEDICAL (Platform). Figure H-1 also illustrates the signal and control interfaces including the terminal connector labels (e.g., P1, P2). The purpose of each cable is listed below:

Cable Name	Purpose
W1–Cable	Supplies vehicle power (28 VDC) to the AN/UYK-128(V) computer and its subassemblies.
W2–Cable	Supplies power and signals to the Display Unit (DU) and Keyboard Unit (KU). Returns Man Machine Interface (MMI) information from the KU to the Processor Unit (PU).
W3–Cable	The Serial Interface Adapter Device (SIAD) is a conduit assembly that breaks out each of the serial interface ports to a connector.
W3P–Cable	Collects position and time information from the PLGR.
W3N–Cable	Provides duplex communication between the PU, Internet Controller (INC) and radios.
W4–Cable	Connects audio signals from the PU to the Intercom system and Combat Vehicle Crew (CVC) Helmet.
W5–Cable	The Expansion Interface Adapter Device (EIAD) is connected to the Universal Serial Bus (USB) connector only when this vehicle is to be used in a Tactical Operations Center (TOC) setup. When used in this configuration, the EIAD is connected between the PU J5 connector and local router.
Ground Strap	Provides safety ground for the PU.
Ground Strap	Provides safety ground for the DU.

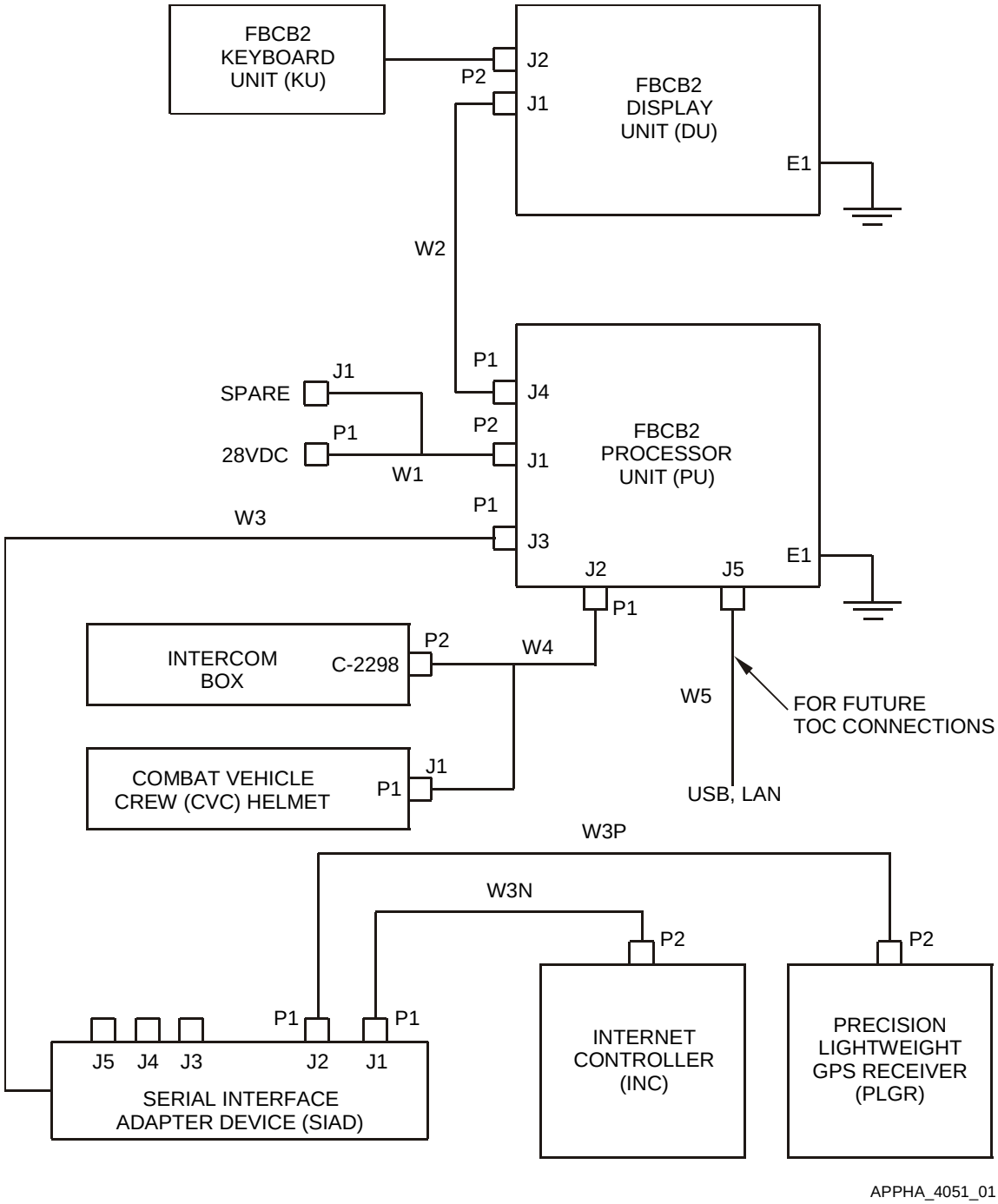

Figure H-1. Equipment Interface Block Diagram

H–4 COMPONENT LOCATION

H–4.1 GENERAL LOCATION

Figure H-2 shows the relative locations of the AN/UYK-128(V) components in the M577 MEDICAL.

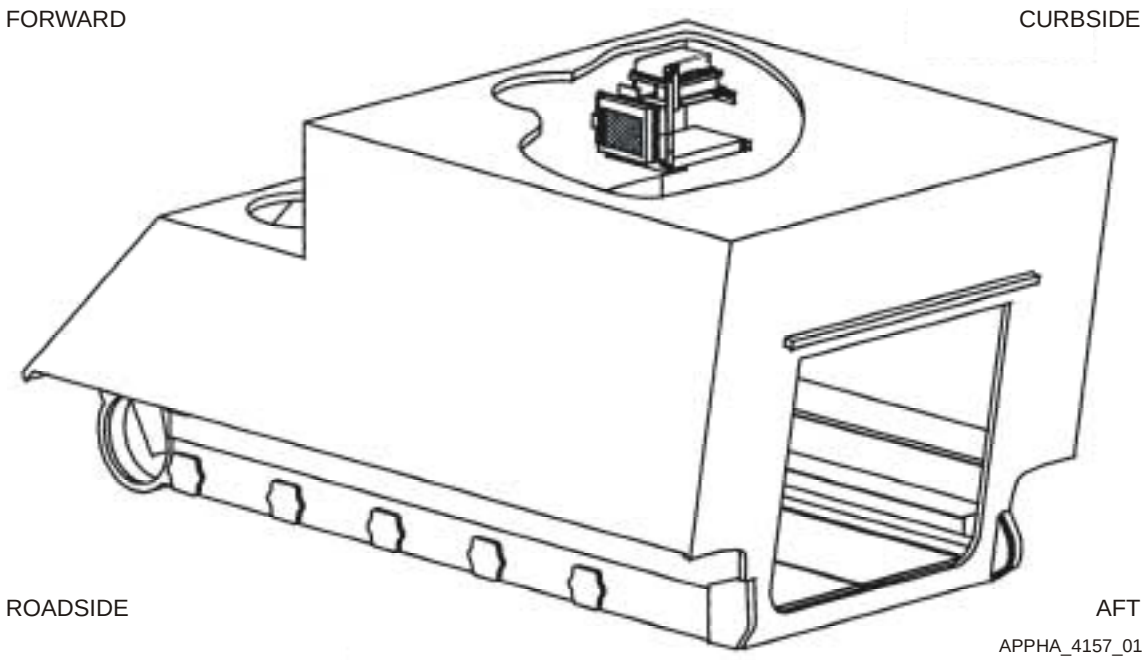

Figure H-2. Relative Component Locations

H–4.2 MOUNTING

Figure H-3 illustrates the PU and PU isolation assembly mounting on curbside wall brackets in the M577 MEDICAL. The keyboard stowage box is mounted on top of the PU. Figure H-3 also shows the details of how the display is mounted to the ceiling with welded blocks and an adapter plate.

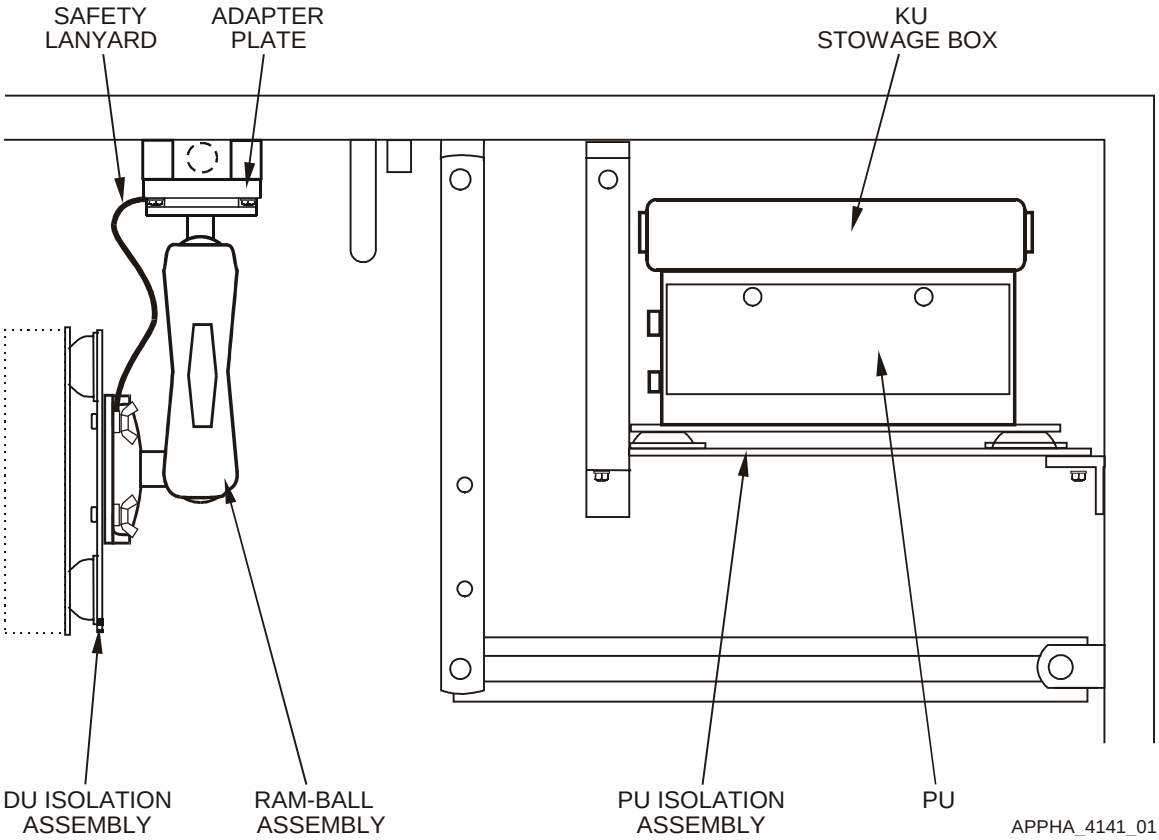

Figure H-3. Equipment Mounting Curbside in M577 MEDICAL

H–5 PLATFORM-UNIQUE TROUBLESHOOTING

No unique troubleshooting procedures are required for this vehicle.

H–6 REMOVAL/REPLACEMENT IN THE PLATFORM

Most installations must be tailored to the platform. Cables and brackets are unique to the installation. Before a part or assembly is removed from a vehicle, fill out a “Maintenance Request” DA Form 2407. One copy of this completed form must remain with the vehicle and the remaining copies must be kept with the failed component. To prove the operability of the system after an item is replaced, perform the system Functional Check.

H–6.1 FUNCTIONAL CHECK

H–6.1.1 POWER UP

Power up and initialize all interface equipment and the AN/UYK-128(V) In Accordance With (IAW) the Operator’s Manual TM 11-7010-326-10, or Pocket Guide TB 11-7010-326-10.

H–6.1.2 VERIFICATION

NOTE

Observe that the Display Unit PWR, DISP and CPU green LED lights are lit.

a. Observe that the PLGR synchronizes with PU, indicated by the PLGR dialog box showing green.

b. Observe that the Router synchronizes with the PU, indicated by the Router dialog box showing green.

c. At the Session Manager screen, select OPS button to display the OPS screen.

d. Verify the GPS status is either green or amber on the Classification/Status Bar.

e. Verify the Communications status is either green or amber on the Classification/Status Bar.

H–6.1.3 POWER DOWN

Power down all interface equipment and the AN/UYK-128(V) IAW the Operator’s Manual TM 11-7010-326-10, or Pocket Guide TB 11-7010-326-10.

H–6.2 REMOVE/REPLACE W1 POWER CABLE

Refer to Figure H-4.

H–6.2.1 REMOVE W1 POWER CABLE

WARNING

Before conducting maintenance involving the removal or replacement of system components, ensure that all power to the FBCB2 system is off (including power from the vehicle). Failure to comply with warning may result in equipment damage or injury to personnel.

a. Power down AN/UYK-128(V) system IAW Operator's Manual TM 11-7010-326-10, or Pocket Guide TB 11-7010-326-10.

b. Disconnect W1-P1 cable connector from vehicle utility power connector.

c. Disconnect W1-J1 cable connector from power interface cable.

d. Disconnect W1-P2 cable connector from PU J1 connector.

e. Install protective cap on PU J1 connector.

NOTE

Note cable routing and tie-wrap locations before removing cable or tie-wraps.

f. Remove tie-wraps securing W1 cable using diagonal wire cutters.

g. Remove W1 power cable (1).

H–6.2.2 REPLACE W1 POWER CABLE

a. Route W1 power cable (1) as originally installed.

b. Remove protective cap from PU J1 connector.

c. Connect W1-P2 cable connector to PU J1 connector.

d. Connect W1-J1 cable connector to power interface cable.

e. Connect W1-P1 cable connector to vehicle utility power connector.

f. Secure W1 cable using tie-wraps.

g. Dress tie-wraps using diagonal wire cutters.

h. Perform Functional Check IAW paragraph H–6.1.

H–6.3 REMOVE/REPLACE W2 DISPLAY CABLE

Refer to Figure H-4.

H–6.3.1 REMOVE W2 DISPLAY CABLE

WARNING

Before conducting maintenance involving the removal or replacement of system components, ensure that all power to the FBCB2 system is off (including power from the vehicle). Failure to comply with warning may result in equipment damage or injury to personnel.

a. Power down AN/UYK-128(V) system IAW Operator's Manual TM 11-7010-326-10, or Pocket Guide TB 11-7010-326-10.

b. Disconnect W2-P1 cable connector from PU J4 connector.

c. Install protective cap on PU J4 connector.

d. Disconnect W2-P2 cable connector from display J1 connector.

e. Install protective cap on display J1 connector.

NOTE

Note cable routing and tie-wrap locations before removing cable or tie-wraps.

f. Remove tie-wraps from W2 cable and ground strap using diagonal wire cutters.

g. Remove W2 display cable (5).

H–6.3.2 REPLACE W2 DISPLAY CABLE

a. Route W2 cable (5).

b. Remove protective cap from display J1 connector.

c. Connect W2-P2 cable connector to display J1 connector.

d. Remove protective cap from PU J4 connector.

e. Connect W2-P1 cable connector to PU J4 connector.

f. Secure W2 cable and ground strap using tie-wraps.

g. Dress tie-wraps using diagonal wire cutters.

h. Perform Functional Check IAW paragraph H–6.1.

H–6.4 REMOVE/REPLACE W3 SERIAL INTERFACE ADAPTER DEVICE (SIAD)

Refer to Figure H-4.

H–6.4.1 REMOVE W3 SERIAL INTERFACE ADAPTER DEVICE (SIAD)

WARNING

Before conducting maintenance involving the removal or replacement of system components, ensure that all power to the FBCB2 system is off (including power from the vehicle). Failure to comply with warning may result in equipment damage or injury to personnel.

a. Power down AN/UYK-128(V) system IAW Operator's Manual TM 11-7010-326-10, or Pocket Guide TB 11-7010-326-10.

b. Disconnect W3N-P1 INC cable connector from W3 SIAD J1 connector.

c. Disconnect W3P-P1 PLGR cable connector from W3 SIAD J2 connector.

d. Disconnect W3 SIAD P1 cable connector from PU J3 connector.

e. Install protective cap on PU J3 connector.

NOTE

Note cable routing and tie-wrap locations before removing cable or tie-wraps.

f. Remove tie-wraps securing W3 SIAD using diagonal wire cutters.

g. Remove W3 SIAD (6).

H–6.4.2 REPLACE W3 SERIAL INTERFACE ADAPTER DEVICE (SIAD)

a. Route W3 SIAD (6) into original position.

b. Remove protective cap from PU J3 connector.

c. Connect W3 SIAD P1 cable connector to PU J3 connector.

d. Connect W3P-P1 PLGR cable connector to W3 SIAD J2 connector.

e. Connect W3N-P1 INC cable connector to W3 SIAD J1 connector.

f. Secure W3 SIAD using tie-wraps.

g. Dress tie-wraps using diagonal wire cutters.

h. Perform Functional Check IAW paragraph H–6.1.

H–6.5 REMOVE/REPLACE W3P PLGR CABLE

Refer to Figure H-4.

H–6.5.1 REMOVE W3P PLGR CABLE

WARNING

Before conducting maintenance involving the removal or replacement of system components, ensure that all power to the FBCB2 system is off (including power from the vehicle). Failure to comply with warning may result in equipment damage or injury to personnel.

a. Power down AN/UYK-128(V) system IAW Operator's Manual TM 11-7010-326-10, or Pocket Guide TB 11-7010-326-10.

b. Disconnect W3P-P1 cable connector from W3 SIAD J2 connector.

c. Unfasten over-center latch and remove PLGR from mounting rack.

d. Disconnect W3P-P2 cable connector from PLGR J2 connector using an offset flat-tip screwdriver.

NOTE

Note cable routing and tie-wrap locations before removing cable or tie-wraps.

e. Remove tie-wraps securing W3P cable using diagonal wire cutters.

f. Remove W3P cable (3).

H–6.5.2 REPLACE W3P PLGR CABLE

a. Route W3P cable (3) as originally installed.

b. Connect W3P-P2 cable connector to PLGR J2 connector using an offset flat-tip screwdriver.

c. Install PLGR into mounting rack and fasten over-center latch.

d. Connect W3P-P1 cable connector to W3 SIAD J2 connector.

e. Secure W3P cable using tie-wraps.

f. Dress tie-wraps using diagonal wire cutters.

g. Perform Functional Check IAW paragraph H–6.1.

H–6.6 REMOVE/REPLACE W3N INC CABLE

Refer to Figure H-4.

H–6.6.1 REMOVE W3N INC CABLE

WARNING

Before conducting maintenance involving the removal or replacement of system components, ensure that all power to the FBCB2 system is off (including power from the vehicle). Failure to comply with warning may result in equipment damage or injury to personnel.

a. Power down AN/UYK-128(V) system IAW Operator's Manual TM 11-7010-326-10, or Pocket Guide TB 11-7010-326-10.

b. Ensure SINCGARS Vehicle Amplifier-Adapter power light is off. If power light is on, power down SINCGARS IAW TM 5820-890-10-8.

c. Disconnect W3N-P1 cable connector from W3 SIAD J1connector.

d. Disconnect W3N-P2 cable connector from SINCGARS INC A2-J6 connector.

NOTE

Note cable routing and tie-wrap locations before removing cable or tie-wraps.

e. Remove tie-wraps securing W3N cable using diagonal cutters.

f. Remove W3N cable (2).

H–6.6.2 REPLACE W3N INC CABLE

a. Route W3N cable (2) as originally installed.

b. Connect W3N-P2 cable connector to SINCGARS INC A2-J6 connector.

c. Connect W3N-P1 cable connector to W3 SIAD J1 connector.

d. Secure W3N cable using tie-wraps.

e. Dress tie-wraps using diagonal wire cutters.

f. Perform Functional Check IAW paragraph H–6.1.

H–6.7 REMOVE/REPLACE W4 AUDIO CABLE

Refer to Figure H-4.

H–6.7.1 REMOVE W4 AUDIO CABLE

WARNING

Before conducting maintenance involving the removal or replacement of system components, ensure that all power to the FBCB2 system is off (including power from the vehicle). Failure to comply with warning may result in equipment damage or injury to personnel.

a. Power down AN/UYK-128(V) system IAW Operator's Manual TM 11-7010-326-10, or Pocket Guide TB 11-7010-326-10.

b. Disconnect W4-P1 cable connector from PU J2 connector.

c. Install protective cap on PU J2 connector.

d. Disconnect W4-P2 cable connector from Intercom Box C-2298 connector.

e. Disconnect W4-J1 cable connector from Combat Vehicle Crew (CVC) helmet P1 connector.

NOTE

Note cable routing and tie-wrap locations before removing cable or tie-wraps.

f. Remove tie-wraps securing W4 cable using diagonal wire cutters.

g. Remove W4 cable (4).

H–6.7.2 REPLACE W4 AUDIO CABLE

a. Route W4 cable (4).

b. Connect W4-J1 cable connector to CVC helmet P1 connector.

c. Connect W4-P2 cable connector to the Intercom Box C-2298 connector.

d. Remove protective cap from PU J2 connector.

e. Connect W4-P1 cable connector to PU J2 connector.

f. Secure W4 cable using tie-wraps.

g. Dress tie-wraps using diagonal wire cutters.

h. Perform Functional Check IAW paragraph H–6.1.

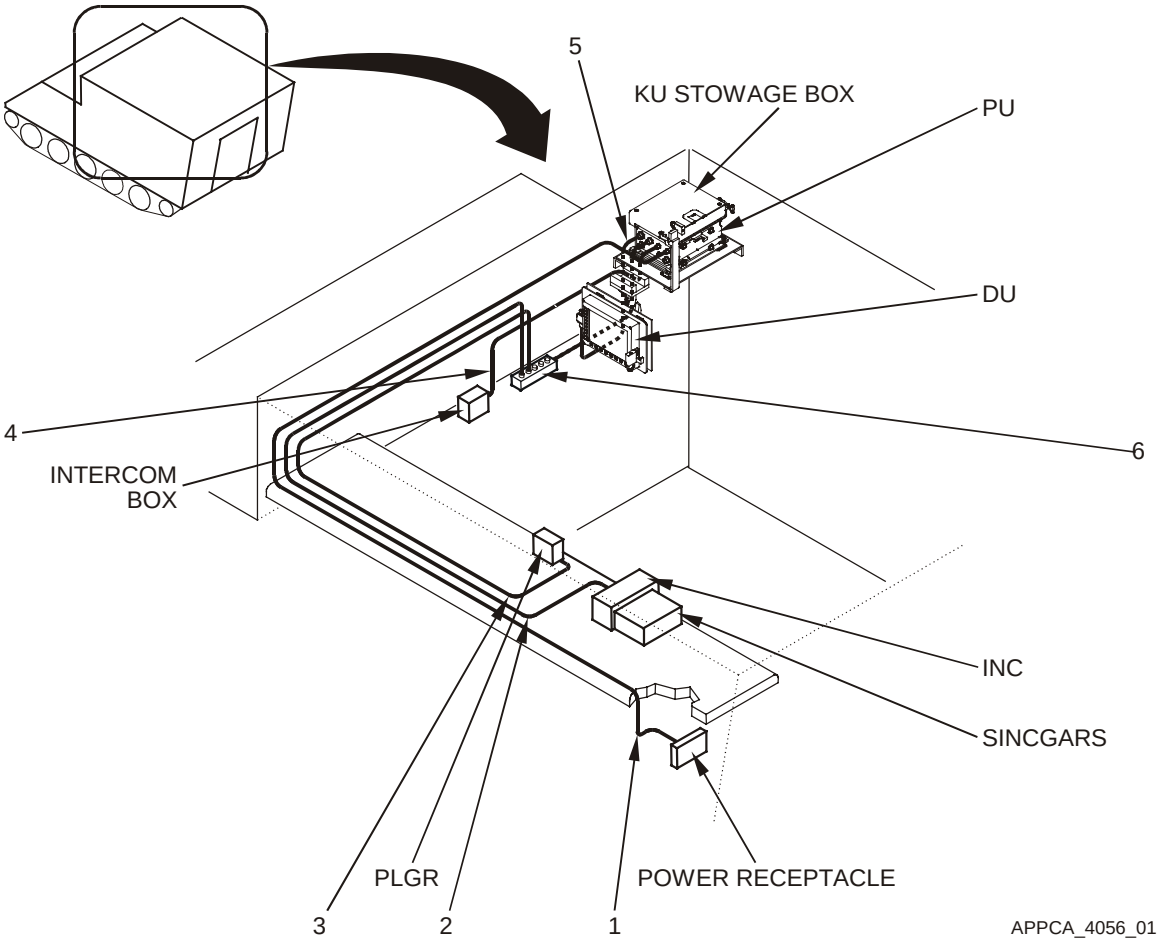

Figure H-4. Cable Run

Key and Parts List for Figure H-4

ITEM NO.	NOMENCLATURE	CAGE CODE	PART NUMBER	NSN	QTY	SMR
1	Cable Assembly W1	0J198	861882-2	5995-01-478-4892		PAODD
2	Cable Assembly W3N	0J198	881336-4	5995-01-478-4926		PAODD
3	Cable Assembly W3P	0J198	881335-4	5995-01-478-4906		PAODD
4	Cable Assembly W4	0J198	881270-2	5995-01-478-4928		PAODD
5	Cable Assembly W2	0J198	881327-2	5995-01-478-4873		PAODD
6	Adapter Assy SIAD W3	0J198	881331-1	4920-01-478-3722		PAODD
--	Strap, Tie Down, Elect	39428	7130K31		A/R	PAOZZ

H–6.8 REMOVE/REPLACE PU ISOLATION ASSEMBLY

Refer to Figure H-5.

NOTE

Ground straps are attached to components at one end (PU and DU) and a frame ground at the other end. Regardless of where the ground strap terminates, it is usually a burnished (void of paint) area. If the ground strap is removed from a burnished area, make sure to return it to the same burnished area. Where applicable, always connect the ground strap first when assembling, and disconnect the ground strap last when disassembling.

H–6.8.1 REMOVE PU ISOLATION ASSEMBLY

WARNING

Before conducting maintenance involving the removal or replacement of system components, ensure that all power to the FBCB2 system is off (including power from the vehicle). Failure to comply with warning may result in equipment damage or injury to personnel.

a. Power down AN/UYK-128(V) system IAW Operator's Manual TM 11-7010-326-10, or Pocket Guide TB 11-7010-326-10.

b. Remove keyboard from keyboard stowage box.

NOTE

Do not remove the Removable Hard Disk Drive Cartridge (RHDDC), locking bracket, or keyboard stowage box from PU.

c. Remove PU IAW Unit Maintenance Manual TM 11-7010-326-20&P, Chapter 2.

d. Remove one hex head screw (7), flat washers (4), ground strap, flat washers (4), lock washer (5) and hex nut (6) from PU isolation assembly bottom plate and mounting bracket using a 7/16" socket with ratchet and 3" extension.

e. Remove remaining three hex head screws (7), flat washers (4), lock washers (5) and hex nuts (6) from PU isolation assembly bottom plate and mounting bracket using a 7/16" socket with ratchet and 3" extension.

f. Remove PU isolation assembly from mounting brackets.

H–6.8.2 REPLACE PU ISOLATION ASSEMBLY

a. Align four holes in PU isolation assembly bottom plate with mounting brackets installation holes.

NOTE

To ensure positive ground, PU ground strap must make direct contact with bare metal. Ensure PU ground strap is installed in its original location at PU isolation assembly bottom plate mounting hole. Slip one flat washer and ground strap on mounting screw before installing in installation hole.

b. Install one hex head screw (7), flat washers (4), ground strap, flat washers (4), lock washer (5) and hex nut (6) in PU isolation assembly bottom plate and mounting bracket using a 7/16” socket with ratchet and 3” extension.

c. Install remaining three hex head screws (7), flat washers (4), lock washers (5) and hex nuts (6) in PU isolation assembly bottom plate and mounting bracket using a 7/16” socket with ratchet and 3” extension.

d. Install PU IAW Unit Maintenance Manual TM 11-7010-326-20&P, Chapter 2.

e. Perform Functional Check IAW paragraph H–6.1.

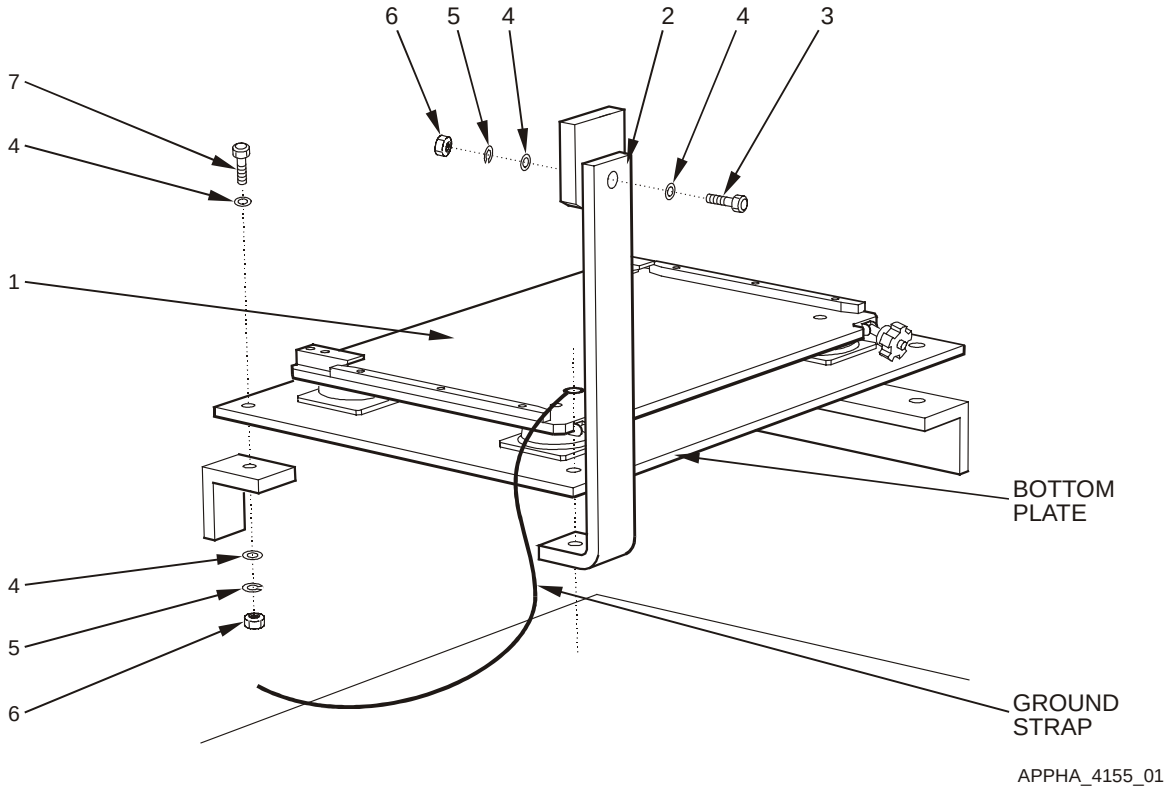

Figure H-5. Remove and Replace PU Isolation Assembly

Key and Parts List for Figure H-5

ITEM NO.	NOMENCLATURE	CAGE CODE	PART NUMBER	NSN	QTY	SMR
1	(PU isolation assembly) Plate, Resilient Mount PU	0J198	872826-1	5340-01-481-5742		PAODD
2	Bracket, Mounting PU	80212	4250123			PAOZZ
3	Screw, Cap, Hexagon	80204	B1821AH025C125N	5305-00-068-0509	1	PAOZZ
4	Washer, Flat	96906	MS27183-10	5310-00-809-4058	10	PAOZZ
5	Washer, Lock	96906	MS35333-40	5310-00-550-1130	5	PAOZZ
6	Nut, Plain, Hexagon	10110	MS51967-2	5310-01-291-3389	5	PAOZZ
7	Screw, Cap, Hex Head	80204	B1821AH025C150N	5305-01-466-7243	4	PAOZZ
--	Assembly, PU Lock	0J198	861865-1		1	XBOOO
--	Bracket, Locking	0J198	861871-1		1	XBOZZ
--	Screw	80205	MS35190-253	5305-00-059-4568	2	PAOZZ

H–6.9 REMOVE/REPLACE DU ISOLATION ASSEMBLY

Refer to Figure H-6.

NOTE

Ground straps are attached to components at one end (PU and DU) and a frame ground at the other end. Regardless of where the ground strap terminates, it is usually a burnished (void of paint) area. If the ground strap is removed from a burnished area, make sure to return it to the same burnished area. Where applicable, always connect the ground strap first when assembling, and disconnect the ground strap last when disassembling.

H–6.9.1 REMOVE DU ISOLATION ASSEMBLY

WARNING

Before conducting maintenance involving the removal and replacement of system components, ensure that all power to the FBCB2 system is off (including power from the vehicle). Failure to comply with warning may result in equipment damage or injury to personnel.

a. Power down AN/UYK-128(V) system IAW Operator's Manual TM 11-7010-326-10, or Pocket Guide TB 11-7010-326-10.

b. Remove DU IAW Unit Maintenance Manual TM 11-7010-326-20&P, Chapter 2.

NOTE

Note cable routing and tie-wrap locations before removing cable or tie-wraps.

c. Remove tie-wraps securing W2 cable and ground strap to DU isolation assembly using diagonal wire cutters.

d. Remove one self-locking wing nut (5), safety lanyard (6), spacer (4) and square neck bolt (3) from RAM-Ball display base with ball and DU isolation assembly (2) bottom plate.

CAUTION

Ensure support is provided to display while loosening RAM-Ball knob. Failure to comply could result in display falling from RAM-Ball mount causing equipment damage.

e. Loosen RAM-Ball knob while supporting DU isolation assembly (2) until RAM-Ball display base with ball can be lifted free of RAM-Ball socket arm.

f. Remove remaining three self-locking wing nuts (5), spacers (4) and square neck bolts (3) from RAM-Ball display base with ball and DU isolation assembly (2) bottom plate.

g. Remove DU isolation assembly (2) from RAM-Ball display base with ball.

H–6.9.2 REPLACE DU ISOLATION ASSEMBLY

a. Align four holes in RAM-Ball display base with ball with slots in DU isolation assembly (2) bottom plate.

b. Install three square neck bolts (3), spacers (4) and self-locking wing nuts (5) in RAM-Ball display base with ball and DU isolation assembly (2) bottom plate.

CAUTION

Ensure RAM-Ball is free of dirt and contaminants before reassembling. Failure to comply can result in slippage or excess wear of RAM-Ball assembly.

c. Inspect and clean RAM-Ball socket arm and display and mounting base with ball, as necessary, using clean lint-free wipes.

d. Insert RAM-Ball display base with ball into RAM-Ball socket arm while supporting DU isolation assembly (2).

e. Adjust viewing angle and tighten RAM-Ball knob.

f. Install remaining square neck bolt (3), spacer (4), safety lanyard (6) and self-locking wing nut (5) in RAM-Ball display base with ball and DU isolation assembly (2) bottom plate.

g. Secure W2 display cable and ground strap to DU isolation assembly (2) bottom plate using tie-wraps.

h. Dress tie-wraps using diagonal wire cutters.

i. Install DU IAW Unit Maintenance Manual TM 11-7010-326-20&P, Chapter 2.

j. Perform Functional Check IAW paragraph H–6.1.

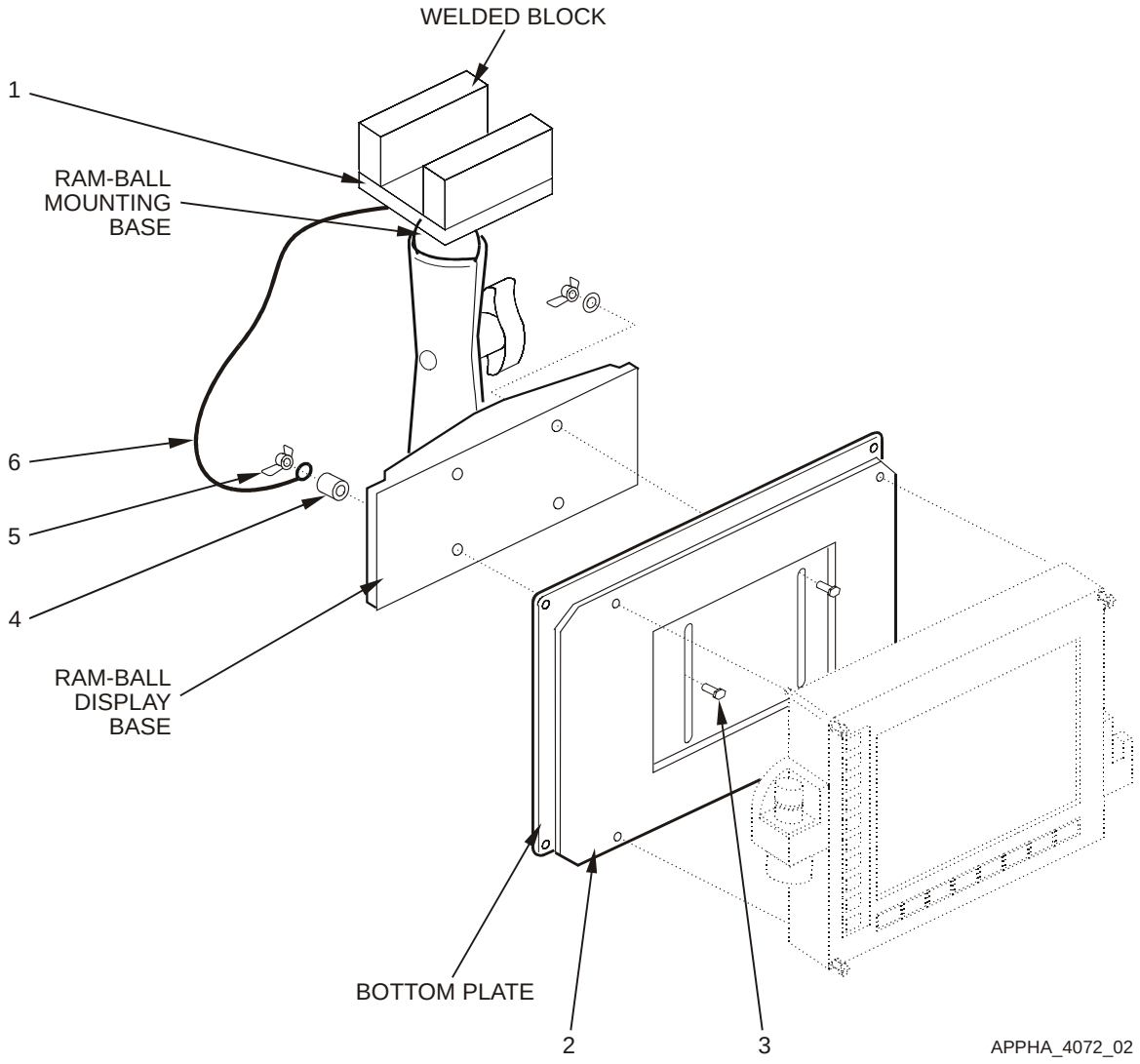

Figure H-6. Remove and Replace DU Isolation Assembly

Key and Parts List for Figure H-6

ITEM NO.	NOMENCLATURE	CAGE CODE	PART NUMBER	NSN	QTY	SMR
1	(DU Adapter Plate) Block, DU Mounting	80212	4250169		1	XBOZZ
2	(DU Isolation Assembly) Plate, Resilient Mount DU	0J198	872871-1	5340-01-481-5743	1	PAODD
3	Bolt, Square Neck	96906	MS35751-17	5306-00-889-2943	4	PAOZZ
4	Spacer, Aluminum	57177	10705AL315C		4	PAOZZ
5	Nut, Self-Locking, Wing	96906	MS51553-420	5310-01-384-2546	4	PAOZZ
6	(Safety Lanyard) Wire Rope Assembly 2’	39428	30645T11		1	PAOZZ
--	Assembly, DU Lock	0J198	872843-1		1	XBOOO
--	Bracket, Locking	0J198	861871-3		1	XBOZZ
--	Washer, Lock	96906	MS35338-42	5310-00-045-3299	2	PAOZZ
--	Screw	80205	MS35190-253	5305-00-059-4568	2	PAOZZ

H–6.10 REMOVE/REPLACE RAM-BALL ASSEMBLY

Figure H-7.

NOTE

Ground straps are attached to components at one end (PU and DU) and a frame ground at the other end. Regardless of where the ground strap terminates, it is usually a burnished (void of paint) area. If the ground strap is removed from a burnished area, make sure to return it to the same burnished area. Where applicable, always connect the ground strap first when assembling, and disconnect the ground strap last when disassembling.

H–6.10.1 REMOVE RAM-BALL ASSEMBLY

WARNING

Before conducting maintenance involving the removal or replacement of system components, ensure that all power to the FBCB2 system is off (including power from the vehicle). Failure to comply with warning may result in equipment damage or injury to personnel.

a. Power down AN/UYK-128(V) system IAW Operator's Manual TM 11-7010-326-10, or Pocket Guide TB 11-7010-326-10.

b. Remove DU IAW Unit Maintenance Manual TM 11-7010-326-20&P, Chapter 2.

NOTE

Note cable routing and tie-wrap locations before removing cable or tie-wraps.

c. Remove tie-wraps securing W2 display cable and ground strap to DU isolation assembly using diagonal wire cutters.

d. Remove one self-locking wing nut (6), spacer (7), safety lanyard (9) and square neck bolt (8) from RAM-Ball display base with ball and DU isolation assembly bottom plate.

CAUTION

Ensure support is provided to display while loosening RAM-Ball knob. Failure to comply could result in display falling from RAM-Ball mount causing equipment damage.

e. Loosen RAM-Ball knob while supporting DU isolation assembly until RAM-Ball display base with ball can be lifted free of RAM-Ball socket arm.

f. Remove remaining three self-locking wing nuts (6), spacers (7) and square neck bolts (8) from RAM-Ball display base with ball and DU isolation assembly bottom plate.

g. Remove RAM-Ball display base with ball from DU isolation assembly.

h. Remove RAM-Ball socket arm from RAM-Ball mounting base with ball on DU mounting block (adapter plate) (1).

H–6.10.1 REMOVE RAM-BALL ASSEMBLY (Continued)

i. Remove three flat head screws (10) from RAM-Ball mounting base with ball and adapter plate (1) using a No. 3 cross-tip screwdriver.

j. Remove RAM-Ball mounting base with ball from adapter plate (1).

H–6.10.2 REPLACE RAM-BALL ASSEMBLY

a. Align three holes in RAM-Ball mounting base with ball with installation holes in adapter plate (1).

b. Install three flat head screws (10) in RAM-Ball mounting base with ball and adapter plate (1) using a No. 3 cross-tip screwdriver.

CAUTION

Ensure RAM-Ball is free of dirt and contaminants before reassembling. Failure to comply can result in slippage or excess wear of RAM-Ball assembly.

c. Inspect and clean RAM-Ball socket arm and display and mounting base with ball, as necessary, using clean lint-free wipes.

d. Install RAM-Ball socket arm on RAM-Ball mounting base with ball on adapter plate (1).

e. Align four holes in RAM-Ball display base with ball with slots in DU isolation assembly bottom plate.

f. Install three square neck bolts (8), spacers (7) and self-locking wing nuts (6) on RAM-Ball display base with ball and DU isolation assembly bottom plate.

g. Insert RAM-Ball display base with ball onto RAM-Ball socket arm while supporting DU isolation assembly.

h. Adjust viewing angle and tighten RAM-Ball knob.

i. Install remaining square neck bolt (8), safety lanyard (9), spacer (7) and self-locking wing nut (6) on RAM-Ball display base with ball and DU isolation assembly bottom plate.

j. Secure W2 display cable and ground strap to DU isolation assembly using tie-wraps.

k. Dress tie-wraps using diagonal wire cutters.

l. Install DU IAW Unit Maintenance Manual TM 11-7010-326-20&P, Chapter 2.

m. Perform Functional Check IAW paragraph H–6.1.

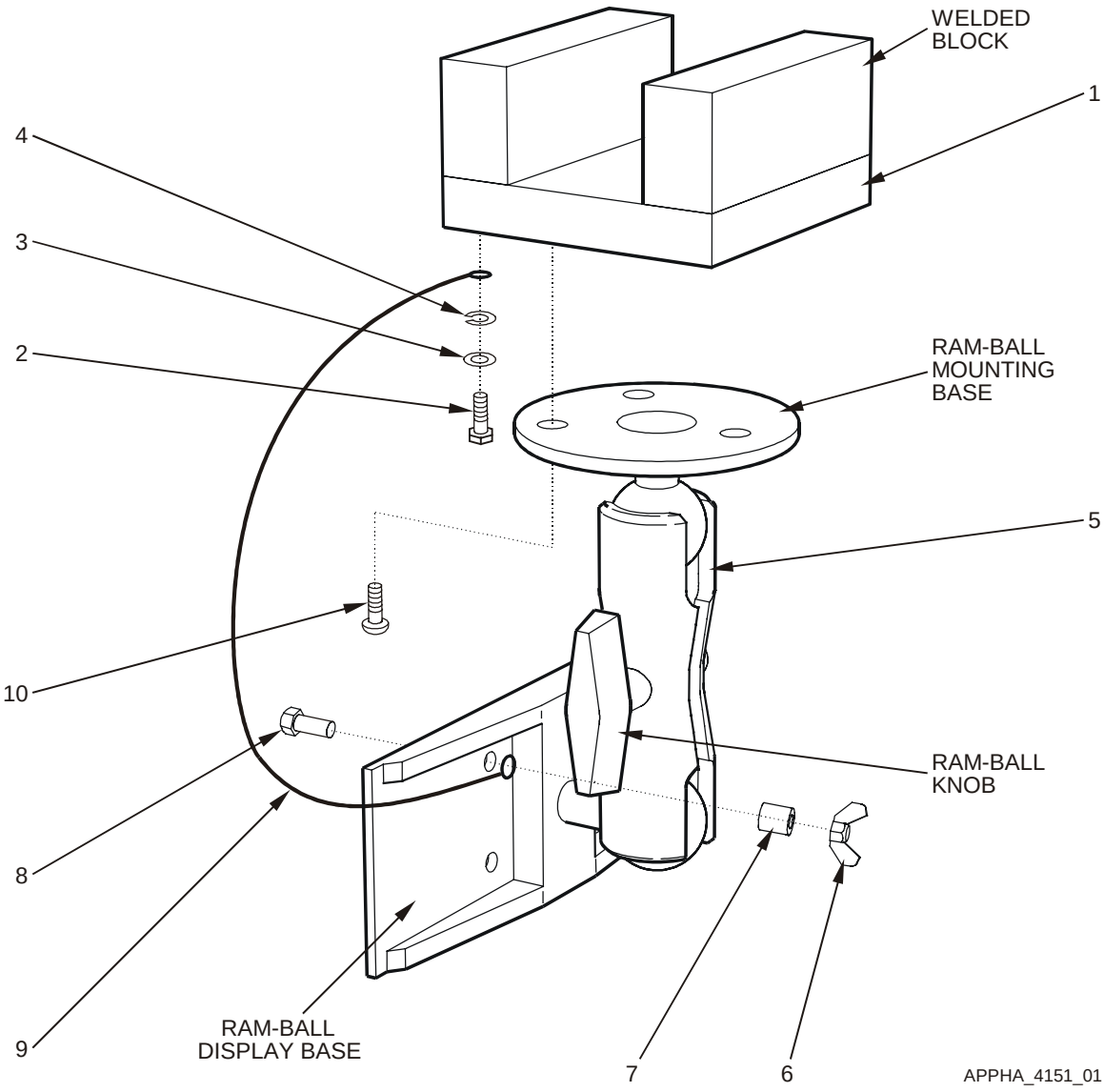

Figure H-7. Remove and Replace RAM-Ball Assembly

Key and Parts List for Figure H-7

ITEM NO.	NOMENCLATURE	CAGE CODE	PART NUMBER	NSN	QTY	SMR
1	(DU Adapter Plate) Block, DU Mounting	80212	4250169		1	XBOZZ
2	Screw, Cap, Hex Head	80204	B1821AH025C150N	5305-01-466-7243	4	PAOZZ
3	Washer, Flat	96906	MS27183-10	5310-00-809-4058	4	PAOZZ
4	Washer, Lock	96906	MS35333-40	5310-00-550-1130	4	PAOZZ
5	Mount, RAM-Ball	0J198	889489-1		1	PAOZZ
6	Nut, Self-Locking, Wing	96906	MS51553-420	5310-01-384-2546	4	PAOZZ
7	Spacer, Aluminum	57177	10705AL315C		4	PAOZZ
8	Bolt, Square Neck	96906	MS35751-17	5306-00-889-2943	4	PAOZZ
9	Wire Rope Assembly 2’	39428	30645T11		1	PAOZZ
10	Screw, Flat Head	80205	MS35190-289	5305-00-958-5246	3	PAOZZ

H–6.11 REMOVE/REPLACE KEYBOARD UNIT (KU) STOWAGE BOX

Refer to Figure H-8.

H–6.11.1 REMOVE KEYBOARD UNIT (KU) STOWAGE BOX

a. Power down AN/UYK-128(V) system IAW Operator's Manual TM 11-7010-326-10, or Pocket Guide TB 11-7010-326-10.

b. Remove KU from stowage box, if stowed.

NOTE

Do not remove the Removable Hard Disk Drive Cartridge (RHDDC) or locking bracket from PU.

c. Remove PU IAW Unit Maintenance Manual TM 11-7010-326-20&P, Chapter 2.

d. Loosen four KU stowage box captive screws (2) until captive screws move freely using a No. 2 cross-tip screwdriver.

e. Remove KU stowage box (1) from PU.

H–6.11.2 REPLACE KEYBOARD UNIT (KU) STOWAGE BOX

a. Align four KU stowage box captive screws (2) with PU installation holes.

b. Tighten four captive screws (2) using a No. 2 cross-tip screwdriver.

c. Install PU IAW Unit Maintenance Manual TM 11-7010-326-20&P, Chapter 2.

d. Perform Functional Check IAW paragraph H–6.1.

e. Stow KU as required.

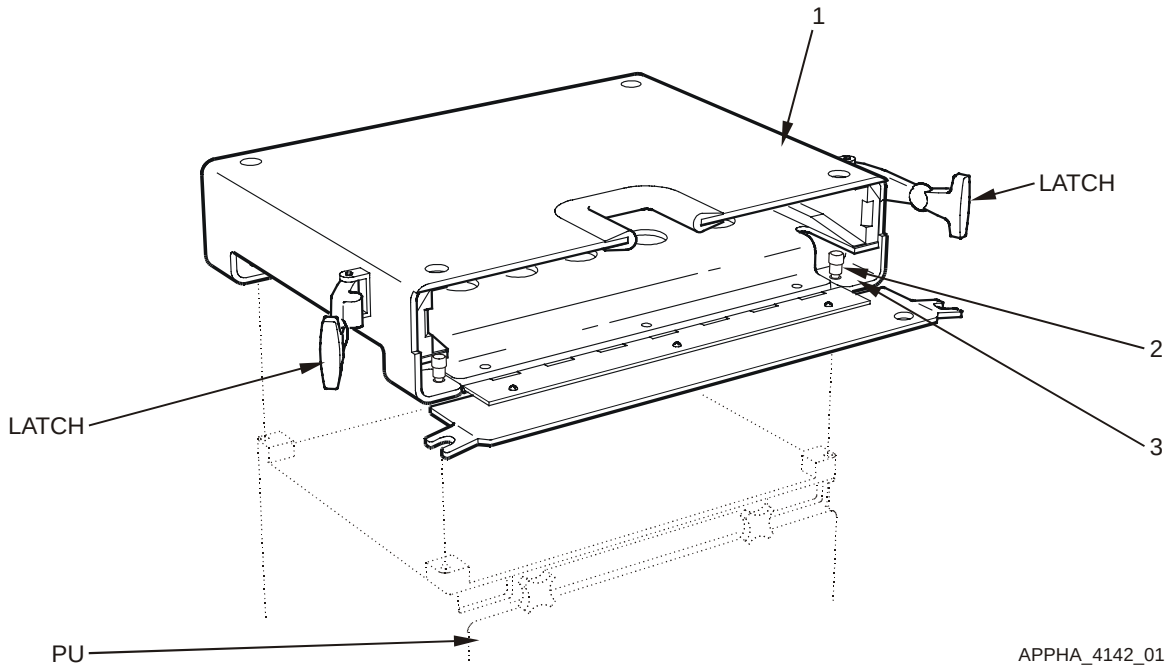

Figure H-8. Remove and Replace Keyboard Unit (KU) Stowage Box

Key and Parts List for Figure H-8

ITEM NO.	NOMENCLATURE	CAGE CODE	PART NUMBER	NSN	QTY	SMR
1	Box, KU Stowage	0J198	872845-1	2540-01-481-5744	1	PAODD
2	Screw, Captive Panel	57177	PH207-05SS1032		4	PAOZZ
3	Retainer, Panel Screw	57177	214-03SS10-32		4	PAOZZ
--	Case, Keyboard	0J198	872845-11		1	XBOOO
--	Bottom, Stowage Box	0J198	872845-12		1	XBOOO
--	Side Rail, Keybd Box	0J198	872845-13		1	XBOOO
--	Side Rail, Keybd Box	0J198	872845-14		1	XBOOO
--	Door, Keyboard Box	0J198	872845-15		1	XBOOO
--	Hinge, Keyboard Box	0J198	872845-16		1	XBOOO
--	Strip, Rubber	0J198	872845-17		1	XBOOO
--	Rivet, Solid, Csk	96906	MS20426AD-4-5	5320-00-117-6950	6	PAOZZ
--	Label, Keyboard Box	0J198	881323-1		1	PAOZZ
--	Screw, Pan Head	96906	MS35206-229	5305-00-984-4989	14	PAOZZ
--	Washer, Flat	96906	MS27183-5	5310-00-983-8483	16	PAOZZ
--	Washer, Lock	96906	MS35338-41	5310-00-045-4007	13	PAOZZ
--	Nut, Plain	96906	MS35649-262	5310-00-934-9747	3	PAOZZ
--	Rubber Edge Trim	39428	8507K16	5325-01-435-2840	9	PAOZZ
--	Adhesive			8040-00-664-4318		
--	Grip, Handle Assembly	0J198	861867-1		1	XBOOO
--	Grip, Handle Keybd	0J198	861869-1		1	XBOZZ
--	Screw, Machine	96906	MS35206-228	5305-00-984-4988	4	PAOZZ
--	Washer, Lock	96906	MS35338-41	5310-00-045-4007	4	PAOZZ
--	Tape, Shielding, Elect	39428	7648A34		1	XBOZZ

H–6.12 REMOVE/REPLACE KEYBOARD UNIT (KU) STOWAGE BOX DOOR LATCHES

Refer to Figure H-9.

H–6.12.1 REMOVE KEYBOARD UNIT (KU) STOWAGE BOX DOOR LATCHES

a. Remove KU stowage box if required IAW paragraph H–6.11.1.

b. Pull rubber T-handles and unfasten KU stowage box door latches, if necessary.

c. Remove two pan head screws (1), lock washers (2) and flat washers (3) from each KU stowage box door latch (4) using a No. 2 cross-tip screwdriver.

d. Remove KU stowage box door latch (4).

H–6.12.2 REPLACE KEYBOARD UNIT (KU) STOWAGE BOX DOOR LATCHES

NOTE

The same KU stowage box door latch part is used for each side of the keyboard stowage box. Position the bumper on one side of the latch so that it is toward the side of the keyboard stowage box when fastened.

a. Align holes in stowage box door latch with installation holes in KU stowage box.

b. Install and tighten two pan head screws (1), lock washers (2) and flat washers (3) for each KU stowage box door latch (4), using a No. 2 cross-tip screwdriver.

c. Pull rubber T-handles and fasten KU stowage box door latches.

d. Replace KU stowage box if required IAW paragraph H–6.11.2.

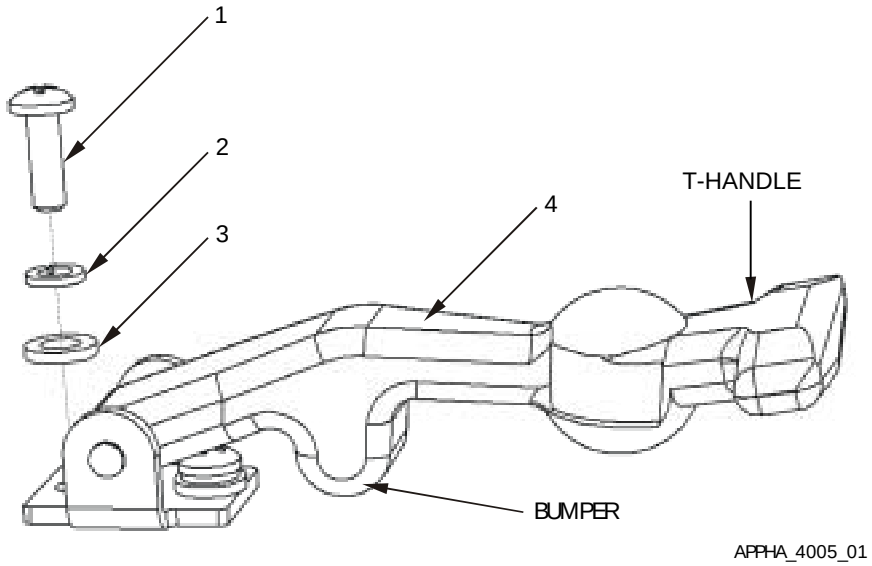

Figure H-9. Remove and Replace Keyboard Unit (KU) Stowage Box Door Latches

Key and Parts List for Figure H-9

ITEM NO.	NOMENCLATURE	CAGE CODE	PART NUMBER	NSN	QTY	SMR
1	Screw, Pan Head	96906	MS35206-229	5305-00-984-4989	4	PAOZZ
2	Washer, Lock	96906	MS35338-41	5310-00-045-4007	4	PAOZZ
3	Washer, Flat	96906	MS27183-5	5310-00-983-8483	4	PAOZZ
4	(KU Stowage Box Door Latch) Latch, Thumb	94222	37-20-071-20	5340-01-351-3340	2	PAOZZ

This page intentionally left blank.

APPENDIX I

SUPPLEMENTARY INFORMATION FOR

M113 COMMON

TABLE OF CONTENTS

Page

I–1 GENERAL I–3

I–2 COMPONENT ITEM NUMBERS AND PART NUMBERS I–3

I–3 SYSTEM INTERFACES I–3

I–3.1 MECHANICAL I–3

I–3.2 CABLE INTERFACES I–3

I–4 COMPONENT LOCATION I–5

I–4.1 GENERAL LOCATION I–5

I–4.2 MOUNTING I–7

I–5 PLATFORM-UNIQUE TROUBLESHOOTING I–8

I–6 REMOVAL/REPLACEMENT IN THE PLATFORM I–8

I–6.1 FUNCTIONAL CHECK I–8

I–6.2 REMOVE/REPLACE W1 POWER CABLE I–9

I–6.3 REMOVE/REPLACE W2 DISPLAY CABLE I–10

I–6.4 REMOVE/REPLACE W3 SERIAL INTERFACE ADAPTER DEVICE (SIAD) I–11

I–6.5 REMOVE/REPLACE W3P PLGR CABLE I–12

I–6.6 REMOVE/REPLACE W3N INC CABLE I–13

I–6.7 REMOVE/REPLACE W4 AUDIO CABLE I–14

I–6.8 REMOVE/REPLACE PU ISOLATION ASSEMBLY I–16

I–6.9 REMOVE/REPLACE DU ISOLATION ASSEMBLY I–19

I–6.10 REMOVE/REPLACE RAM-BALL ASSEMBLY I–22

I–6.11 REMOVE/REPLACE KEYBOARD UNIT (KU) STOWAGE BOX I–25

I–6.12 REMOVE/REPLACE KEYBOARD UNIT (KU) STOWAGE BOX DOOR LATCHES I–27

LIST OF ILLUSTRATIONS

Page
Figure I-1. Equipment Interface Block Diagram I–4
Figure I-2. Relative Component Locations I–6
Figure I-3. Detail/Alternate Component Locations I–7
Figure I-4. Cable Run I–15
Figure I-5. Remove and Replace PU Isolation Assembly I–18
Figure I-6. Remove and Replace DU Isolation Assembly I–21
Figure I-7. Remove and Replace RAM-Ball Assembly I–24
Figure I-8. Remove and Replace Keyboard Unit (KU) Stowage Box I–25
Figure I-9. Remove and Replace Keyboard Unit (KU) Stowage Box Door Latch I–28

I–1 GENERAL

This appendix describes the interfaces between the FBCB2 equipment and the M113 Common. This appendix also identifies the component parts of the M113 Common platform installation kit and details the removal and replacement procedures particular to the M113 Common.

I–2 COMPONENT ITEM NUMBERS AND PART NUMBERS

Key and Parts List tables contained in the Removal and Replacement section of this Appendix serve a dual purpose. Use the Item Numbers in the Key to identify components and attaching hardware shown in the Figures illustrating the tasks. The nomenclature and part number for the hardware and equipment mounting components of the installation kit also are keyed to the Item Numbers in the tables. Additional parts ordering information, such as Contractor and Government Entity code (CAGE); National Stock Number (NSN); quantity; and Source, Maintenance, and Recoverability (SMR) codes, are provided. The Key and Parts List follow the task illustrations.

I–3 SYSTEM INTERFACES

I–3.1 MECHANICAL

The mechanical hardware-to-hardware interfaces include:

a. Cables

b. Processor Unit (PU)

c. Display Unit (DU)

d. Keyboard Unit (KU)

I–3.2 CABLE INTERFACES

Figure I-1 illustrates a block diagram of the interface between the FBCB2 equipment and the M113 Common (Platform). Figure I-1 also illustrates the signal and control interfaces along with the terminal connector labels (e.g., P1, P2). The purpose of each cable is listed below:

Cable Name	Purpose
W1–Cable	Supplies vehicle power (28 VDC) to the AN/UYK-128(V) computer and its subassemblies.
W2–Cable	Supplies power and signals to the Display Unit (DU) and Keyboard Unit (KU). Returns Man Machine Interface (MMI) information from the KU to the Processor Unit (PU).
W3–Cable	The Serial Interface Adapter Device (SIAD) is a conduit assembly that breaks out each of the serial interface ports to a connector.
W3P–Cable	Collects position and time information from the PLGR.
W3N–Cable	Provides duplex communication between the PU, Internet Controller (INC) and radios.
W4–Cable	Connects audio signals from the PU to the Intercom system and Combat Vehicle Crew (CVC) Helmet.
Ground Strap	Provides safety ground for the PU.
Ground Strap	Provides safety ground for the DU.

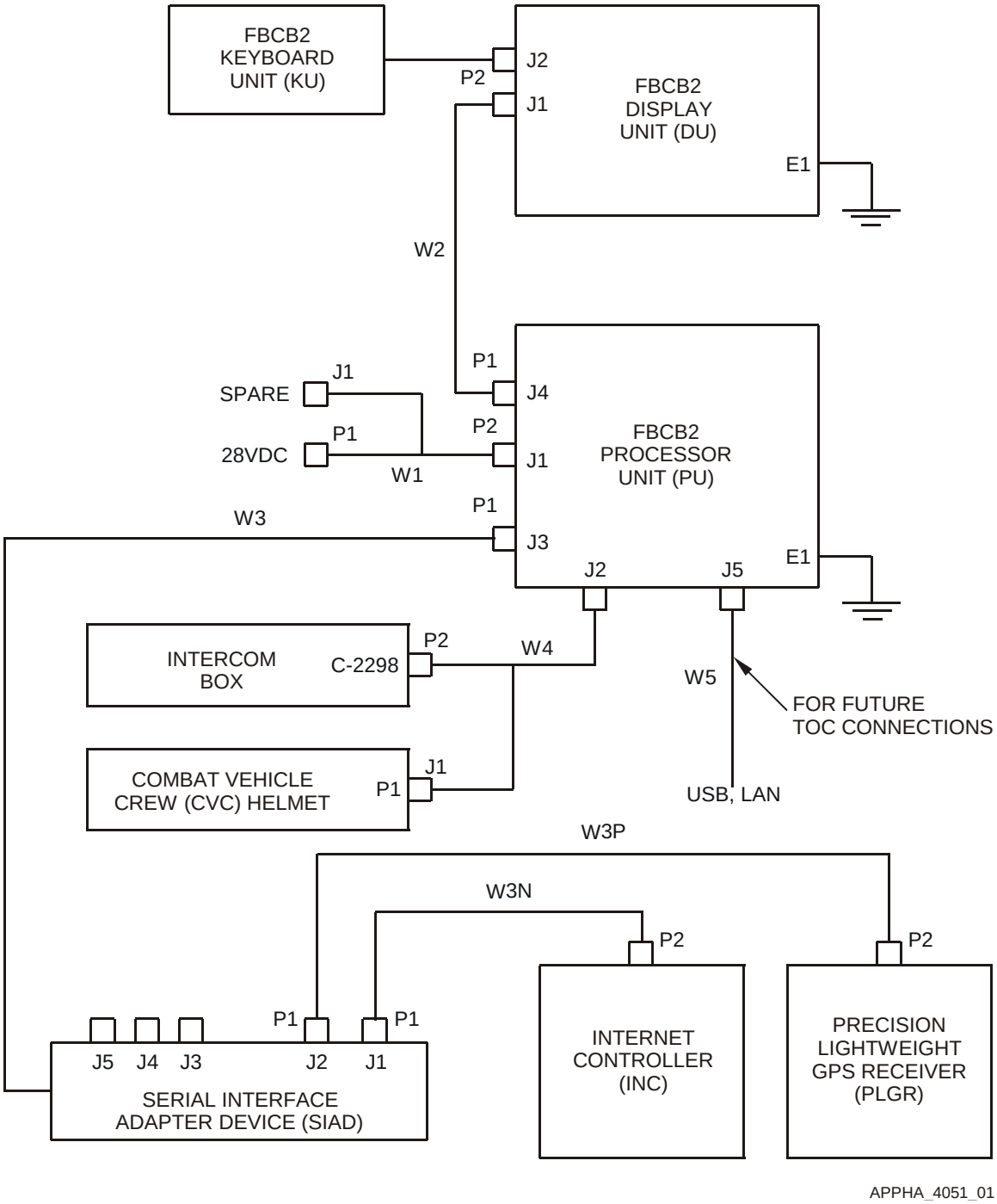

Figure I-1. Equipment Interface Block Diagram

I–4 COMPONENT LOCATION

I–4.1 GENERAL LOCATION

Figure I-2 shows the relative location of the FBCB2 computer equipment and mounting components in the M113 Common vehicle. In this installation, the DU may be located in front of the engine wall or at mid-cabin against the curbside wall. The KU storage box may be mounted on the engine wall or on the ceiling at mid-cabin. The PU is mounted on the curbside wall above the PLGR.

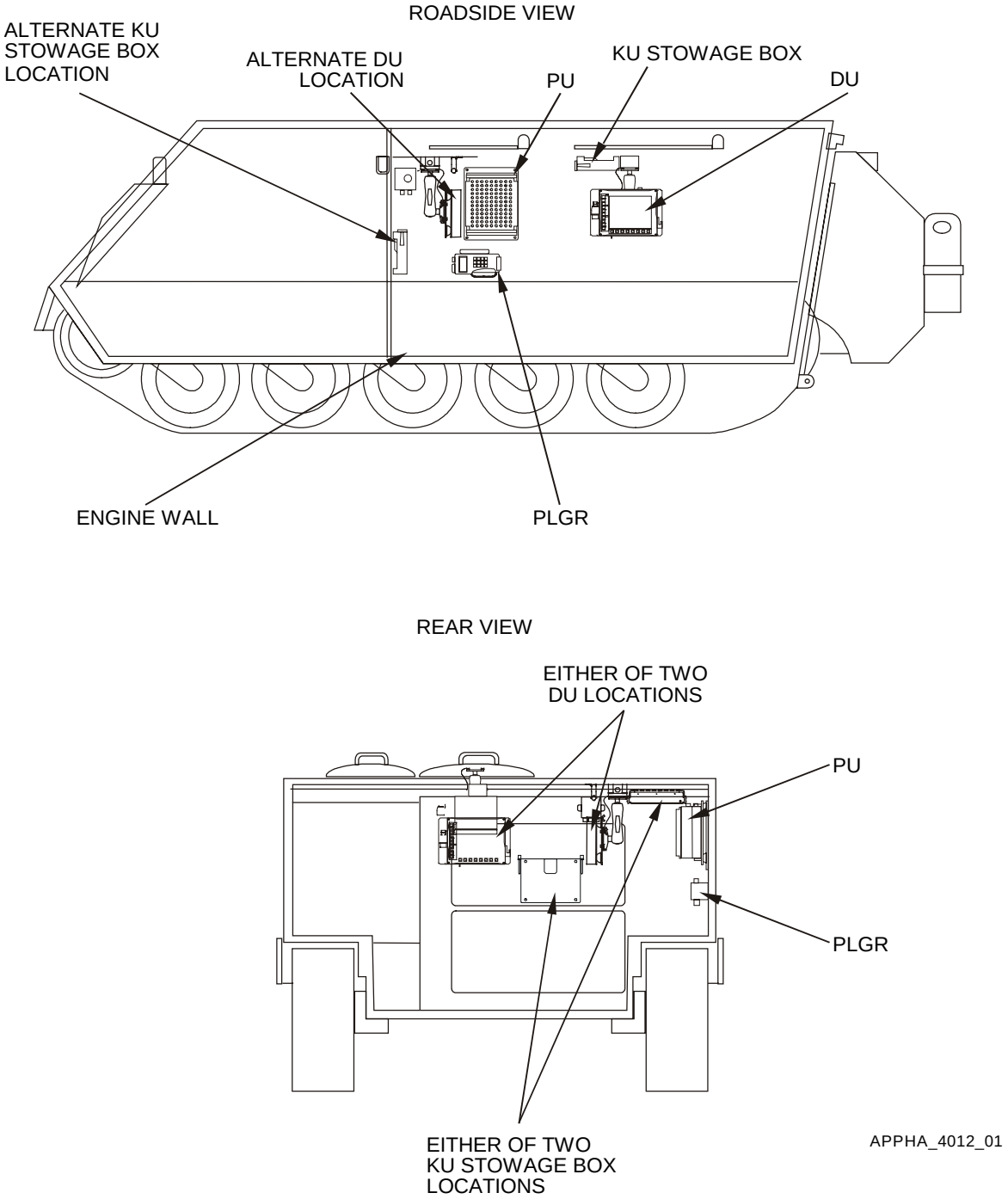

Figure I-2. Relative Component Locations

I–4.2 MOUNTING

Figure I-3 illustrates a detail view of the component locations and alternate mounting locations for the DU and KU Stowage Box.

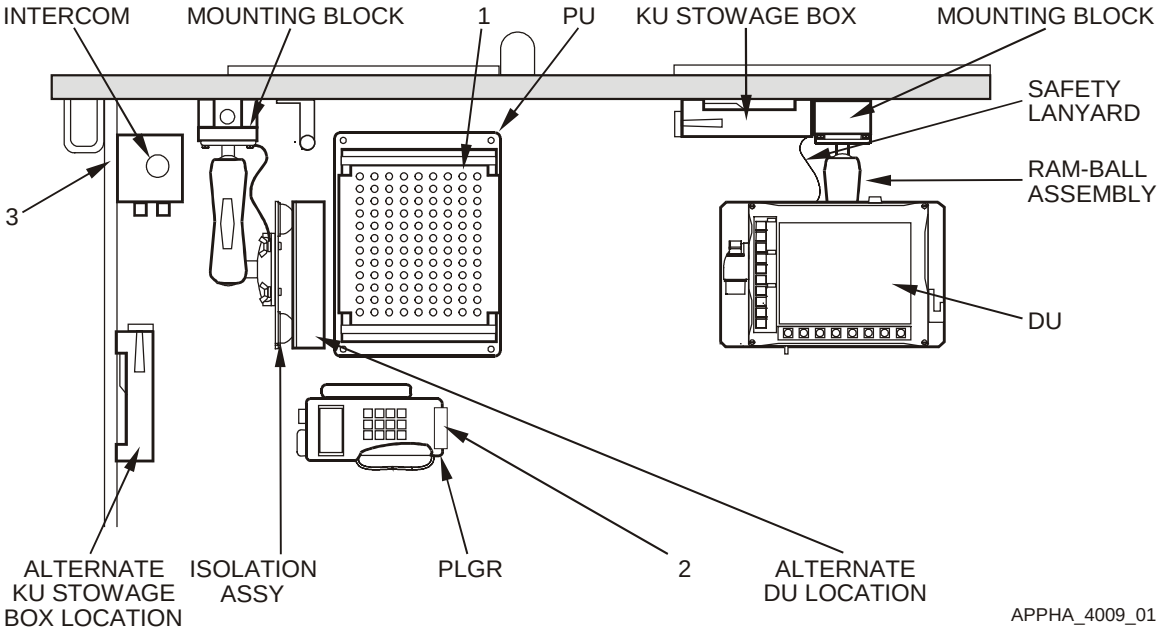

Figure I-3. Detail/Alternate Component Locations

Key and Parts List for Figure I-3

ITEM NO.	NOMENCLATURE	CAGE CODE	PART NUMBER	NSN	QTY	SMR
1	Thermal Guard Assy (if installed)	0J198	872860-1		1	XBOOO
--	Thermal Guard	0J198	872860-11		1	PAOZZ
--	Screw, Machine	96906	MS51958-63	5305-00-059-3659	4	PAOZZ
--	Grommet	63590	BG2903	5325-01-291-3383	4	PAOZZ
--	Retainer, Bolt	032U6	75-4119		4	PAOZZ
2	PLGR Mount					
--	Screw, Machine	96906	MS35207-262	5305-00-989-6265	3	PAOZZ
--	Washer, Flat	96906	MS27183-47	5310-01-312-4959	3	PAOZZ
--	Washer, Lock	96906	MS35338-43	5310-00-045-3296	3	PAOZZ
3	Intercom Mounting					
--	Screw, Cap, Hexagon	80204	B1821AH025C100N	5305-01-389-7984	2	PAOZZ
--	Washer, Flat	96906	MS27183-10	5310-00-809-4058	4	PAOZZ
--	Washer, Lock	96906	MS35338-44	5310-00-582-5965	2	PAOZZ
--	Nut, Plain, Hexagon	96906	MS35649-2252	5310-00-997-1888	2	PAOZZ

I–5 PLATFORM-UNIQUE TROUBLESHOOTING

There are no unique troubleshooting procedures for this vehicle.

I–6 REMOVAL/REPLACEMENT IN THE PLATFORM

Most installations must be tailored to the platform. Cables and brackets are unique to the installation. Before a part or assembly is removed from a vehicle, fill out a “Maintenance Request” DA Form 2407. One copy of this completed form must remain with the vehicle and the remaining copies must be kept with the faulty component. To prove the operability of the system after an item is replaced, perform the system Functional Check.

I–6.1 FUNCTIONAL CHECK

I–6.1.1 POWER UP

Power up and initialize all interface equipment and the AN/UYK-128(V) In Accordance With (IAW) the Operator’s Manual TM 11-7010-326-10, or Pocket Guide TB 11-7010-326-10.

I–6.1.2 VERIFICATION

NOTE

Observe that the Display Unit PWR, DISP and CPU green LED lights are lit.

a. Observe that the PLGR synchronizes with PU, indicated by the PLGR dialog box showing green.

b. Observe that the Router synchronizes with the PU, indicated by the Router dialog box showing green.

c. At the Session Manager screen, select OPS button to display the OPS screen.

d. Verify the GPS status is either green or amber on the Classification/Status Bar.

e. Verify the Communications status is either green or amber on the Classification/Status Bar.

I–6.1.3 POWER DOWN

Power down all interface equipment and the AN/UYK-128(V) IAW the Operator’s Manual TM 11-7010-326-10, or Pocket Guide TB 11-7010-326-10.

I–6.2 REMOVE/REPLACE W1 POWER CABLE

Refer to Figure I-4.

I–6.2.1 REMOVE W1 POWER CABLE

WARNING

Before conducting maintenance involving the removal or replacement of system components, ensure that all power to the FBCB2 system is off (including power from the vehicle). Failure to comply with warning may result in equipment damage or injury to personnel.

a. Power down AN/UYK-128(V) system IAW Operator's Manual TM 11-7010-326-10, or Pocket Guide TB 11-7010-326-10.

b. Disconnect W1-P1 cable connector from vehicle utility power connector.

c. Disconnect W1-J1 cable connector from power interface cable (if applicable).

d. Disconnect W1-P2 cable connector from PU J1 connector.

e. Install protective cap on PU J1 connector.

NOTE

Note cable routing and tie-wrap locations before removing cable or tie-wraps.

f. Remove tie-wraps securing W1 cable using diagonal wire cutters.

g. Remove W1 power cable (4).

I–6.2.2 REPLACE W1 POWER CABLE

a. Route W1 power cable (4).

b. Remove protective cap from PU J1 connector.

c. Connect W1-P2 cable connector to PU J1 connector.

d. Connect W1-J1 cable connector to power interface cable (if applicable).

e. Connect W1-P1 cable connector to vehicle utility power connector.

f. Secure W1 cable using tie-wraps, as applicable.

g. Dress tie-wraps using diagonal wire cutters.

h. Perform Functional Check IAW paragraph I–6.1.

I–6.3 REMOVE/REPLACE W2 DISPLAY CABLE

Refer to Figure I-4.

I–6.3.1 REMOVE W2 DISPLAY CABLE

WARNING

Before conducting maintenance involving the removal or replacement of system components, ensure that all power to the FBCB2 system is off (including power from the vehicle). Failure to comply with warning may result in equipment damage or injury to personnel.

a. Power down AN/UYK-128(V) system IAW Operator's Manual TM 11-7010-326-10, or Pocket Guide TB 11-7010-326-10.

b. Disconnect W2-P1 cable connector from PU J4 connector.

c. Install protective cap on PU J4 connector.

d. Disconnect W2-P2 cable connector from display J1 connector.

e. Install protective cap on display J1 connector.

NOTE

Note cable routing and tie-wrap locations before removing cable or tie-wraps.

f. Remove tie-wraps from W2 cable and ground strap using diagonal wire cutters.

g. Remove W2 display cable (5).

I–6.3.2 REPLACE W2 DISPLAY CABLE

a. Route W2 cable (5).

b. Remove protective cap from display J1 connector.

c. Connect W2-P2 cable connector to display J1 connector.

d. Remove protective cap from PU J4 connector.

e. Connect W2-P1 cable connector to PU J4 connector.

f. Secure W2 cable and ground strap using tie-wraps.

g. Dress tie-wraps using diagonal wire cutters.

h. Perform Functional Check IAW paragraph I–6.1.

I–6.4 REMOVE/REPLACE W3 SERIAL INTERFACE ADAPTER DEVICE (SIAD)

Refer to Figure I-4.

I–6.4.1 REMOVE W3 SERIAL INTERFACE ADAPTER DEVICE (SIAD)

WARNING

Before conducting maintenance involving the removal or replacement of system components, ensure that all power to the FBCB2 system is off (including power from the vehicle). Failure to comply with warning may result in equipment damage or injury to personnel.

a. Power down AN/UYK-128(V) system IAW Operator's Manual TM 11-7010-326-10, or Pocket Guide TB 11-7010-326-10.

b. Disconnect W3N-P1 cable connector from W3 SIAD J1 connector.

c. Disconnect W3P-P1 cable connector from W3 SIAD J2 connector.

d. Disconnect W3 SIAD-P1 cable connector from PU J3 connector.

e. Install protective cap on PU J3 connector.

NOTE

Note cable routing and tie-wrap locations before removing cable or tie-wraps.

f. Remove tie-wraps securing W3 SIAD using diagonal wire cutters.

g. Remove W3 SIAD (2).

I–6.4.2 REPLACE W3 SERIAL INTERFACE ADAPTER DEVICE (SIAD)

a. Route W3 SIAD (2) into original position.

b. Remove protective cap from PU J3 connector.

c. Connect W3 SIAD-P1 cable connector to PU J3 connector.

d. Connect W3P-P1 cable connector to W3 SIAD J2 connector.

e. Connect W3N-P1 cable connector to W3 SIAD J1 connector.

f. Secure W3 SIAD using tie-wraps.

g. Dress tie-wraps using diagonal wire cutters.

h. Perform Functional Check IAW paragraph I–6.1.

I–6.5 REMOVE/REPLACE W3P PLGR CABLE

Refer to Figure I-4.

I–6.5.1 REMOVE W3P PLGR CABLE

WARNING

Before conducting maintenance involving the removal or replacement of system components, ensure that all power to the FBCB2 system is off (including power from the vehicle). Failure to comply with warning may result in equipment damage or injury to personnel.

a. Power down AN/UYK-128(V) system IAW Operator's Manual TM 11-7010-326-10, or Pocket Guide TB 11-7010-326-10.

b. Disconnect W3P-P1 cable connector from W3 SIAD J2 connector.

c. Remove PLGR from mount.

d. Disconnect W3P-P2 cable connector from PLGR J2 connector using an offset flat screwdriver.

NOTE

Note cable routing and tie-wrap locations before removing cable or tie-wraps.

e. Remove tie-wraps securing W3P cable using diagonal wire cutters.

f. Remove W3P cable (1).

I–6.5.2 REPLACE W3P PLGR CABLE

a. Route W3P cable (1).

b. Connect W3P-P2 cable connector to PLGR J2 connector using an offset flat screwdriver.

c. Install PLGR in mount.

d. Connect W3P-P1 cable connector to W3 SIAD J2 connector.

e. Secure W3P cable using tie-wraps.

f. Dress tie-wraps using diagonal wire cutters.

g. Perform Functional Check IAW paragraph I–6.1.

I–6.6 REMOVE/REPLACE W3N INC CABLE

Refer to Figure I-4.

I–6.6.1 REMOVE W3N INC CABLE

WARNING

Before conducting maintenance involving the removal or replacement of system components, ensure that all power to the FBCB2 system is off (including power from the vehicle). Failure to comply with warning may result in equipment damage or injury to personnel.

a. Power down AN/UYK-128(V) system IAW Operator's Manual TM 11-7010-326-10, or Pocket Guide TB 11-7010-326-10.

b. Disconnect W3N-P1 cable connector from W3 SIAD J1connector.

c. Disconnect W3N-P2 cable connector from SINCGARS INC J6 connector.

NOTE

Note cable routing and tie-wrap locations before removing cable or tie-wraps.

d. Remove tie-wraps securing W3N cable using diagonal cutters.

e. Remove W3N cable (3).

I–6.6.2 REPLACE W3N INC CABLE

a. Route W3N cable (3).

b. Connect W3N-P2 cable connector to SINCGARS INC J6 connector.

c. Connect W3N-P1 cable connector to W3 SIAD J1 connector.

d. Secure W3N cable using tie-wraps.

e. Dress tie-wraps using diagonal wire cutters.

f. Perform Functional Check IAW paragraph I–6.1.

I–6.7 REMOVE/REPLACE W4 AUDIO CABLE

Refer to Figure I-4.

I–6.7.1 REMOVE W4 AUDIO CABLE

WARNING

Before conducting maintenance involving the removal or replacement of system components, ensure that all power to the FBCB2 system is off (including power from the vehicle). Failure to comply with warning may result in equipment damage or injury to personnel.

a. Power down AN/UYK-128(V) system IAW Operator's Manual TM 11-7010-326-10, or Pocket Guide TB 11-7010-326-10.

b. Disconnect W4-P1 cable connector from PU J2 connector.

c. Install protective cap on PU J2 connector.

d. Disconnect W4-P2 cable connector from Intercom Box C-2298 connector.

e. Disconnect W4-J1 cable connector from Combat Vehicle Crew (CVC) helmet P1 connector.

NOTE

Note cable routing and tie-wrap locations before removing cable or tie-wraps.

f. Remove tie-wraps securing W4 cable using diagonal wire cutters.

g. Remove W4 cable (6).

I–6.7.2 REPLACE W4 AUDIO CABLE

a. Route W4 cable (6).

b. Connect W4-J1 cable connector to CVC helmet P1 connector.

c. Connect W4-P2 cable connector to the Intercom Box C-2298 connector.

d. Remove protective cap from PU J2 connector.

e. Connect W4-P1 cable connector to PU J2 connector.

f. Secure W4 cable using tie-wraps.

g. Dress tie-wraps using diagonal wire cutters.

h. Perform Functional Check IAW paragraph I–6.1.

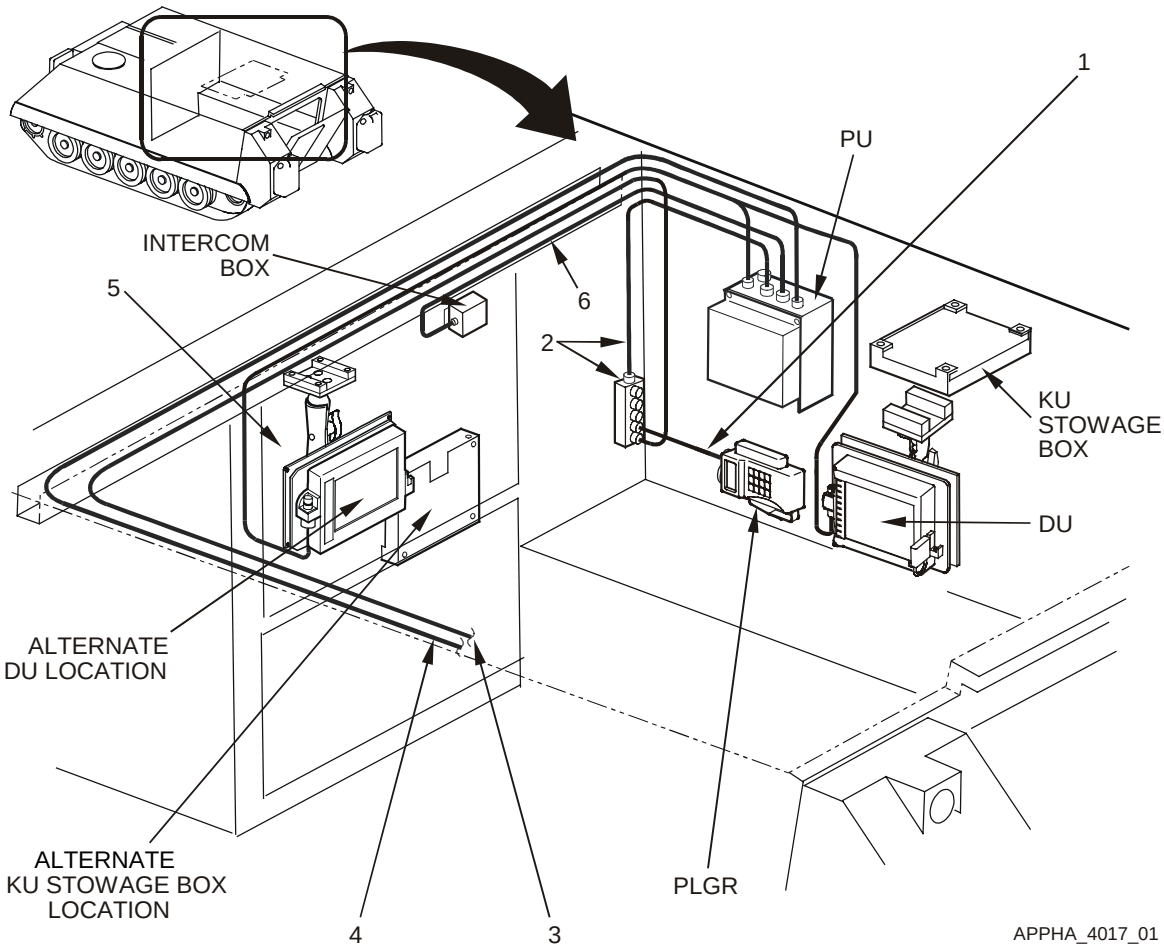

Figure I-4. Cable Run

Key and Parts List for Figure I-4

ITEM NO.	NOMENCLATURE	CAGE CODE	PART NUMBER	NSN	QTY	SMR
1	Cable Assembly W3P	0J198	881335-2	5995-01-478-4893	1	PAODD
2	Adapter Assy SIAD W3	0J198	881331-1	4920-01-478-3722	1	PAODD
3	Cable Assembly W3N	0J198	881336-4	5995-01-478-4926	1	PAODD
4	Cable Assembly W1	0J198	861880-8	5995-01-478-5012	1	PAODD
5	Cable Assembly W2	0J198	881327-2	5995-01-478-4873	1	PAODD
6	Cable Assembly W4	0J198	881270-2	5995-01-478-4928	1	PAODD
--	Holder, Cable, Tie 2w	39428	7566K27	A/R	25	PAOZZ
--	Strap, Tie Down, Elect	39428	7130K31	A/R	25	PAOZZ

I–6.8 REMOVE/REPLACE PU ISOLATION ASSEMBLY

Refer to Figure I-5.

NOTE

Ground straps are attached to components at one end (PU and DU) and a frame ground at the other end. Regardless of where the ground strap terminates, it is usually a burnished (void of paint) area. If the ground strap is removed from a burnished area, make sure to return it to the same burnished area. Where applicable, always connect the ground strap first when assembling, and disconnect the ground strap last when disassembling.

I–6.8.1 REMOVE PU ISOLATION ASSEMBLY

WARNING

Before conducting maintenance involving the removal or replacement of system components, ensure that all power to the FBCB2 system is off (including power from the vehicle). Failure to comply with warning may result in equipment damage or injury to personnel.

a. Power down AN/UYK-128(V) system IAW Operator's Manual TM 11-7010-326-10, or Pocket Guide TB 11-7010-326-10.

NOTE

Do not remove the Removable Hard Disk Drive Cartridge (RHDDC), locking bracket, or thermal guard (if installed) from PU.

b. Remove PU IAW Unit Maintenance Manual TM 11-7010-326-20&P, Chapter 2.

c. Remove one hex head screw (1), lock washer (2), flat washer (3) and ground strap from PU isolation assembly bottom plate and weldnut using a 7/16" socket with ratchet and 3" extension.

d. Remove remaining three hex head screws (1), lock washers (2) and flat washers (3) from PU isolation assembly bottom plate and weldnuts using a 7/16" socket with ratchet and 3" extension.

e. Remove the PU isolation assembly from the weldnuts.

I–6.8.2 REPLACE PU ISOLATION ASSEMBLY

a. Align four PU isolation assembly bottom plate holes with weldnuts.

NOTE

To ensure positive ground, PU ground strap must make direct contact with bare metal. Ensure PU ground strap is installed in its original location at the PU isolation assembly bottom plate mounting hole. Slip the lock washer, flat washer and then the ground strap on the mounting screw before installing and tightening screw.

b. Install one hex head screw (1), lock washer (2), flat washer (3) and ground strap on PU isolation assembly bottom plate and weldnut using a 7/16” socket with ratchet and 3” extension.

c. Install remaining three hex head screws (1), lock washers (2) and flat washers (3) on PU isolation assembly bottom plate and weldnuts using a 7/16” socket with ratchet and 3” extension.

d. Install PU IAW Unit Maintenance Manual TM 11-7010-326-20&P, Chapter 2.

e. Perform Functional Check IAW paragraph I–6.1.

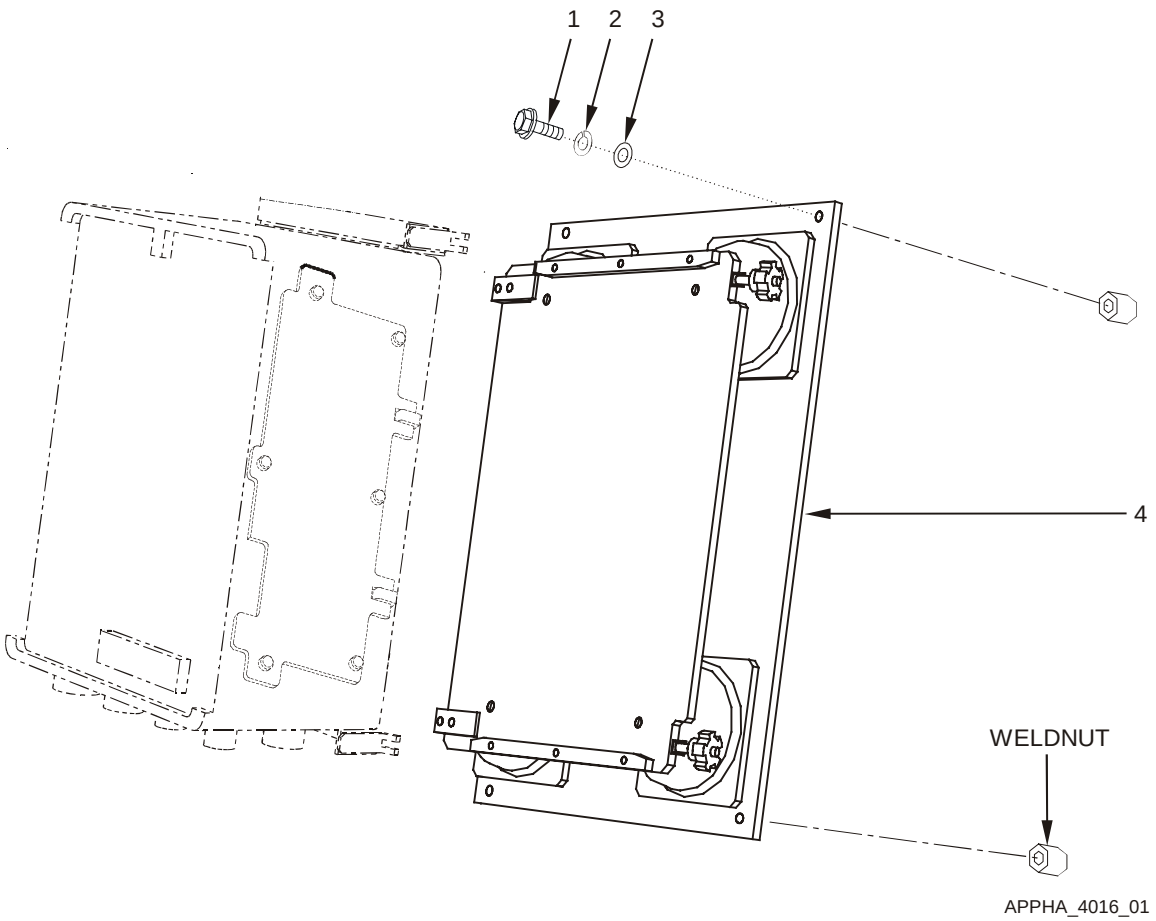

Figure I-5. Remove and Replace PU Isolation Assembly

Key and Parts List for Figure I-5

ITEM NO.	NOMENCLATURE	CAGE CODE	PART NUMBER	NSN	QTY	SMR
1	Screw, Cap, Hexagon	80204	B1821AH025C088N	5305-01-389-8787	4	PAOZZ
2	Washer, Lock	96906	MS35338-44	5310-00-582-5965	4	PAOZZ
3	Washer, Flat	96906	MS27183-10	5310-00-809-4058	4	PAOZZ
4	(PU isolation assembly) Plate, Resilient Mount PU	0J198	872826-1	5340-01-481-5742	1	PAODD
--	Assembly, PU Lock	0J198	861865-1		1	XBOOO
--	Bracket, Locking PU	0J198	861871-1		1	XBOZZ
--	Screw	80205	MS35190-253	5305-00-059-4568	2	PAOZZ

I–6.9 REMOVE/REPLACE DU ISOLATION ASSEMBLY

Refer to Figure I-6.

NOTE

Ground straps are attached to components at one end (PU and DU) and a frame ground at the other end. Regardless of where the ground strap terminates, it is usually a burnished (void of paint) area. If the ground strap is removed from a burnished area, make sure to return it to the same burnished area. Where applicable, always connect the ground strap first when assembling, and disconnect the ground strap last when disassembling.

I–6.9.1 REMOVE DU ISOLATION ASSEMBLY

WARNING

Before conducting maintenance involving the removal and replacement of system components, ensure that all power to the FBCB2 system is off (including power from the vehicle). Failure to comply with warning may result in equipment damage or injury to personnel.

a. Power down AN/UYK-128(V) system IAW Operator's Manual TM 11-7010-326-10, or Pocket Guide TB 11-7010-326-10.

b. Remove DU IAW Unit Maintenance Manual TM 11-7010-326-20&P, Chapter 2.

NOTE

Note cable routing and tie-wrap locations before removing cable or tie-wraps.

c. Remove tie-wraps securing W2 cable and ground strap to DU isolation assembly using diagonal wire cutters.

d. Remove one self-locking wing nut (7), safety lanyard (8), spacer (6) and square neck bolt (5) from RAM-Ball display base with ball and DU isolation assembly (1) bottom plate.

CAUTION

Ensure support is provided to display while loosening RAM-Ball knob. Failure to comply could result in display falling from RAM-Ball mount causing equipment damage.

e. Loosen RAM-Ball knob while supporting DU isolation assembly (1) until RAM-Ball display base with ball can be lifted free of RAM-Ball socket arm.

f. Remove remaining three self-locking wing nuts (7), spacers (6) and square neck bolts (5) from RAM-Ball display base with ball and DU isolation assembly (1) bottom plate.

g. Remove DU isolation assembly (1).

I–6.9.2 REPLACE DU ISOLATION ASSEMBLY

a. Align four RAM-Ball display base with ball installation holes with slots in the DU isolation assembly (1) bottom plate.

b. Install three square neck bolts (5), spacers (6) and self-locking wing nuts (7) on RAM-Ball display base with ball and DU isolation assembly (1) bottom plate.

CAUTION

Ensure RAM-Ball is free of dirt and contaminants before reassembling. Failure to comply can result in slippage or excess wear of RAM-Ball assembly.

c. Inspect and clean RAM-Ball socket arm and display base with ball, as necessary, using clean lint-free wipes.

d. Insert RAM-Ball display base with ball into RAM-Ball socket arm while supporting DU isolation assembly (1).

e. Adjust viewing angle and tighten RAM-Ball knob.

f. Install remaining square neck bolt (5), spacer (6), safety lanyard (8) and self-locking wing nut (7).

g. Secure W2 display cable and ground strap to DU isolation assembly (1) bottom plate using tie-wraps.

h. Dress tie-wraps using diagonal wire cutters.

i. Install DU IAW Unit Maintenance Manual TM 11-7010-326-20&P, Chapter 2.

j. Perform Functional Check IAW paragraph I–6.1.

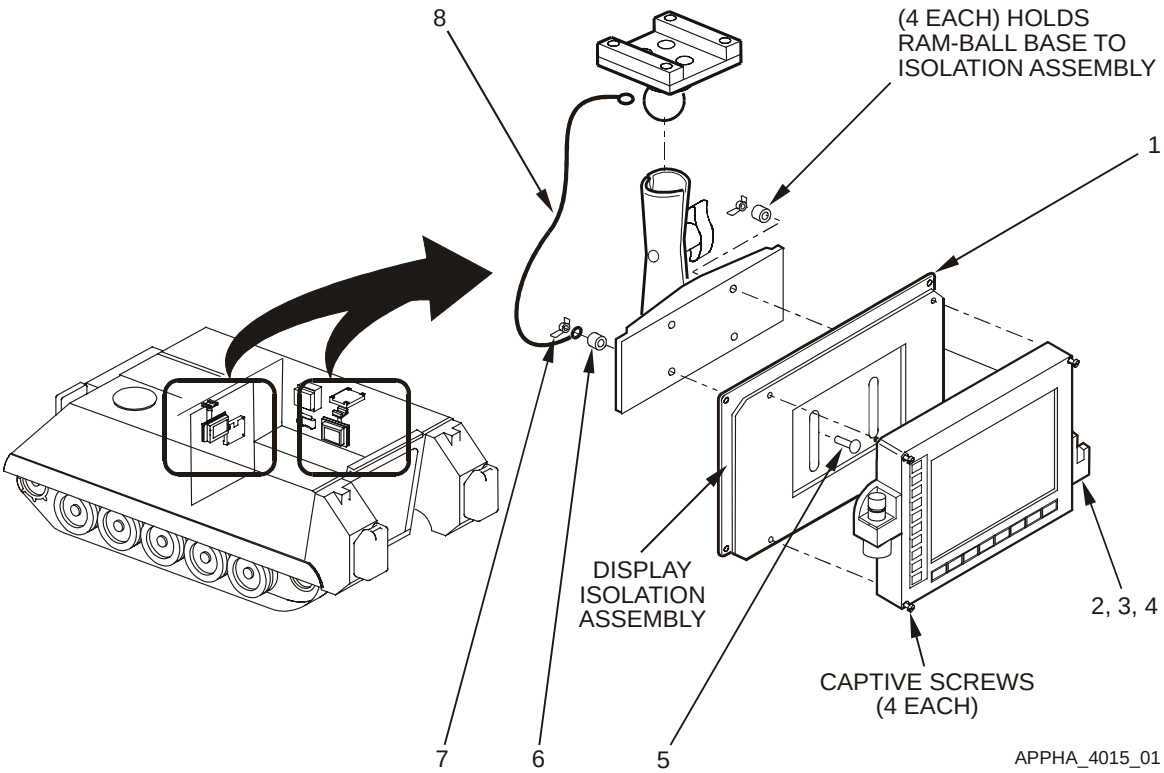

Figure I-6. Remove and Replace DU Isolation Assembly

Key and Parts List for Figure I-6

ITEM NO.	NOMENCLATURE	CAGE CODE	PART NUMBER	NSN	QTY	SMR
1	(DU isolation assembly) Plate, Resilient Mount DU	0J198	872871-1	5340-01-481-5743	1	PAODD
--	Assembly, DU Lock	0J198	872843-1		1	XBOOO
2	Bracket, Locking	0J198	861871-3		1	XBOZZ
3	Washer, Lock	96906	MS35338-42	5310-00-045-3299	2	PAOZZ
4	Screw, Flat Head	80205	MS35190-253	5305-00-059-4568	2	PAOZZ
5	Bolt, Square Neck	96906	MS35751-17	5306-00-889-2943	4	PAOZZ
6	Spacer, Aluminum	57177	10705AL315C		4	PAOZZ
7	Nut, Self-Locking, Wing	96906	MS51553-420	5310-01-384-2546	4	PAOZZ
8	(Safety Lanyard) Wire Rope Assembly	39428	30645T11		1	PAOZZ

I–6.10 REMOVE/REPLACE RAM-BALL ASSEMBLY

Refer to Figure I-7.

NOTE

Ground straps are attached to components at one end (PU and DU) and a frame ground at the other end. Regardless of where the ground strap terminates, it is usually a burnished (void of paint) area. If the ground strap is removed from a burnished area, make sure to return it to the same burnished area. Where applicable, always connect the ground strap first when assembling, and disconnect the ground strap last when disassembling.

I–6.10.1 REMOVE RAM-BALL ASSEMBLY

WARNING

Before conducting maintenance involving the removal or replacement of system components, ensure that all power to the FBCB2 system is off (including power from the vehicle). Failure to comply with warning may result in equipment damage or injury to personnel.

a. Power down AN/UYK-128(V) system IAW Operator's Manual TM 11-7010-326-10, or Pocket Guide TB 11-7010-326-10.

b. Remove DU IAW Unit Maintenance Manual TM 11-7010-326-20&P, Chapter 2.

NOTE

Note cable routing and tie-wrap locations before removing cable or tie-wraps.

c. Remove tie-wraps securing W2 display cable and ground strap to DU isolation assembly using diagonal wire cutters.

d. Remove one self-locking wing nut (6), safety lanyard (7), spacer (5) and square neck bolt (4) from RAM-Ball display base.

CAUTION

Ensure support is provided to display while loosening RAM-Ball knob. Failure to comply could result in display falling from RAM-Ball mount causing equipment damage.

e. Loosen RAM-Ball knob while supporting DU isolation assembly until RAM-Ball display base with ball can be lifted free of RAM-Ball socket arm.

f. Remove remaining three self-locking wing nuts (6), spacers (5) and square neck bolts (4) from RAM-Ball display base with ball and DU isolation assembly bottom plate.

g. Remove RAM-Ball display base with ball from DU isolation assembly.

h. Remove RAM-Ball socket arm from RAM-Ball mounting base with ball on Mounting DU Bracket (1).

I–6.10.1 REMOVE RAM-BALL ASSEMBLY (Continued)

i. Remove three machine screws (3) from RAM-Ball mounting base with ball and Mounting DU Bracket (1) using a No. 3 cross-tip screwdriver.

j. Remove RAM-Ball mounting base with ball from Mounting DU Bracket (1).

I–6.10.2 REPLACE RAM-BALL ASSEMBLY

a. Align three holes in RAM-Ball mounting base with ball with Mounting DU Bracket (1) installation holes.

b. Install three machine screws (3) on RAM-Ball mounting base with ball and Mounting DU Bracket (1) using a No. 3 cross-tip screwdriver.

CAUTION

Ensure RAM-Ball is free of dirt and contaminants before reassembling. Failure to comply can result in slippage or excess wear of RAM-Ball assembly.

c. Inspect and clean RAM-Ball socket arm, display and mounting base with ball, as necessary, using clean lint-free wipes.

d. Install RAM-Ball socket arm on RAM-Ball mounting base with ball on Mounting DU Bracket (1).

e. Align four RAM-Ball display base with ball installation holes with slots in DU isolation assembly bottom plate.

f. Install three square neck bolts (4), spacers (5) and self-locking wing nuts (6) on RAM-Ball display base with ball and DU isolation assembly bottom plate.

g. Insert RAM-Ball display base with ball into RAM-Ball socket arm while supporting DU isolation assembly.

h. Adjust viewing angle and tighten RAM-Ball knob.

i. Install remaining square neck bolt (4), spacer (5), safety lanyard (7) and self-locking wing nut (6) on RAM-Ball display base with ball and DU isolation assembly bottom plate.

j. Install DU IAW Unit Maintenance Manual TM 11-7010-326-20&P, Chapter 2.

k. Secure W2 display cable and ground strap to DU isolation assembly using tie-wraps.

l. Dress tie-wraps using diagonal wire cutters.

m. Perform Functional Check IAW paragraph I–6.1.

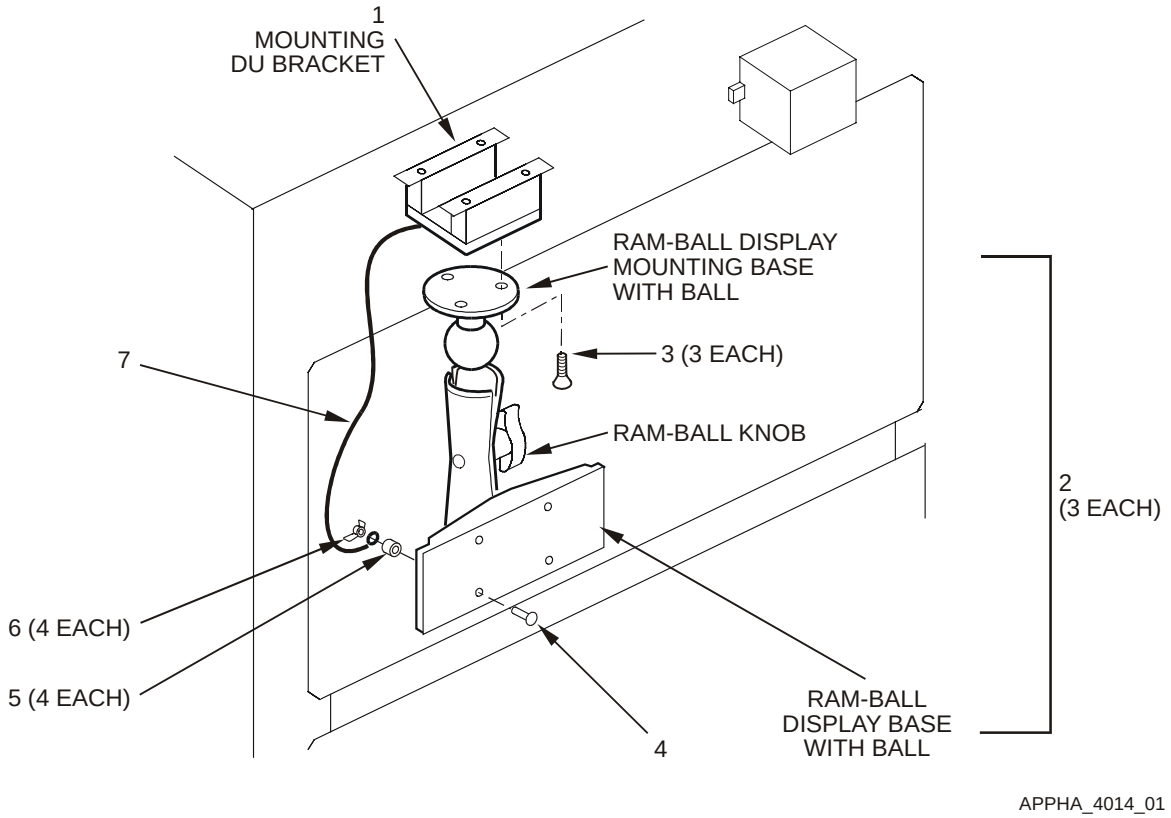

Figure I-7. Remove and Replace RAM-Ball Assembly

Key and Parts List for Figure I-7

ITEM NO.	NOMENCLATURE	CAGE CODE	PART NUMBER	NSN	QTY	SMR
1	Bracket, Mounting DU	0J198	872867-1		1	XBOOO
--	Screw, Cap, Hexagon	80204	B1821AH025C100N	5305-01-389-7984	4	PAOZZ
--	Washer, Lock	96906	MS35338-44	5310-00-582-5965	5	PAOZZ
--	Washer, Flat	96906	MS15795-810		4	PAOZZ
--	Retainer, Push	96906	94800A720		4	PAOZZ
2	Mount, RAM-Ball (3 Pieces)	0J198	889489-1		1	PAOZZ
3	Screw, Machine	96906	MS35190-288	5305-00-958-5245	3	PAOZZ
4	Bolt, Square Neck	96906	MS35751-17	5306-00-889-2943	4	PAOZZ
5	Spacer, Aluminum	57177	10705AL315C		4	PAOZZ
6	Nut, Self-Locking, Wing	96906	MS51553-420	5310-01-384-2546	4	PAOZZ
7	(Safety Lanyard) Wire Rope Assembly	39428	30645T11		1	PAOZZ

I–6.11 REMOVE/REPLACE KEYBOARD UNIT (KU) STOWAGE BOX

Refer to Figure I-8.

I–6.11.1 REMOVE KEYBOARD UNIT (KU) STOWAGE BOX

a. Remove keyboard from stowage box, if stowed.

b. Loosen four KU stowage box captive screws (2) until the captive screws move freely using a No. 2 cross-tip screwdriver.

c. Remove KU stowage box from ceiling mount or engine wall mount.

I–6.11.2 REPLACE KEYBOARDUNIT (KU) STOWAGE BOX

a. Align four KU stowage box captive screws (2) with ceiling mount or engine wall mount installation holes.

b. Tighten four captive screws (2) using a No. 2 cross-tip screwdriver.

c. Stow keyboard, if necessary.

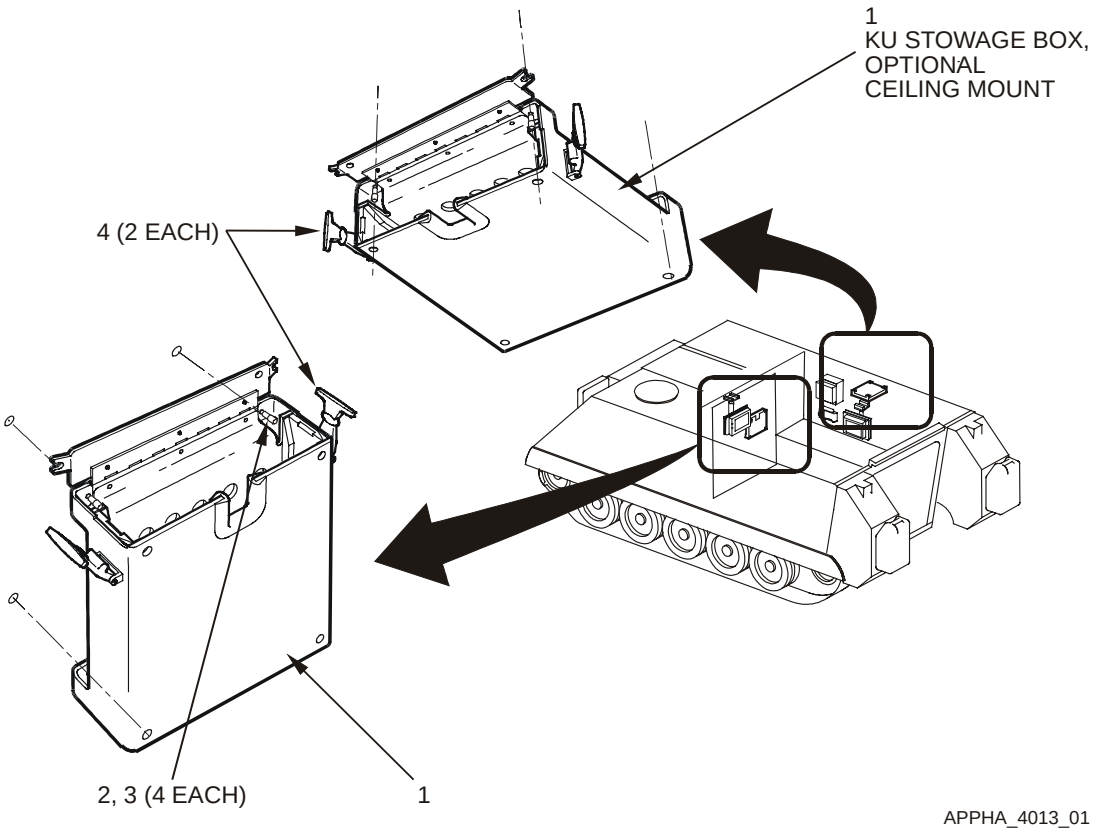

Figure I-8. Remove and Replace Keyboard Unit (KU) Stowage Box

Key and Parts List for Figure I-8

ITEM NO.	NOMENCLATURE	CAGE CODE	PART NUMBER	NSN	QTY	SMR
1	Box, KU Stowage	0J198	872845-1	2540-01-481-5744	1	PAODD
2	Screw, Captive Panel	57177	PH207-05SS1032		4	PAOZZ
3	Retainer, Panel Screw	57177	214-03SS10-32		4	PAOZZ
--	Screw, Pan Head	96906	MS35206-229	5305-00-984-4989	14	PAOZZ
--	Washer, Flat	96906	MS27183-5	5310-00-983-8483	16	PAOZZ
--	Washer, Lock	96906	MS35338-41	5310-00-045-4007	13	PAOZZ
--	Case, Keyboard	0J198	872845-11		1	XBOOO
--	Bottom, Stowage Box	0J198	872845-12		1	XBOOO
--	Side Rail, Keyboard Box	0J198	872845-13		1	XBOOO
--	Side Rail, Keyboard Box	0J198	872845-14		1	XBOOO
--	Door, Keyboard Box	0J198	872845-15		1	XBOOO
--	Hinge, Keyboard Box	0J198	872845-16		1	XBOOO
--	Strip, Rubber	0J198	872845-17		1	XBOOO
--	Rivet, Solid, Csk	96906	MS20426AD-4-5	5320-00-117-6950	6	PAOZZ
--	Label, Keyboard Box	0J198	881323-1		1	PAOZZ
--	Nut, Plain	96906	MS35649-262	5310-00-934-9747	3	PAOZZ
--	Rubber Edge Trim	39428	8507K16	5325-01-435-2840	9	PAOZZ
--	Adhesive	04963	SCOTCH-GRIP RUB	8040-00-664-4318	1	PAOZZ
4	(KU stowage box door latch) Latch, Thumb	94222	37-20-071-20	5340-01-351-3340	2	PAOZZ
--	Marker, Exhaust Gas	80212	12350736	7690-01-222-7995	1	PAOZZ
--	Grip, Handle Assy	0J198	861867-1		1	XBOOO
--	Grip, Handle	0J198	861869-1		1	XBOZZ
--	Screw, Machine	96906	MS35206-228	5305-00-984-4988	4	PAOZZ
--	Washer, Lock	96906	MS35338-41	5310-00-045-4007	4	PAOZZ
--	Tape, Shielding, Elect	39428	7648A34		1	XBOZZ

I–6.12 REMOVE/REPLACE KEYBOARD UNIT (KU) STOWAGE BOX DOOR LATCHES

Refer to Figure I-9.

I–6.12.1 REMOVE KEYBOARD UNIT (KU) STOWAGE BOX DOOR LATCHES

a. Pull rubber T-handles and unfasten KU stowage box door latches, if necessary.

b. Remove two pan head screws (1), lock washers (2) and flat washers (3) from each KU stowage box door latch (4) using a No. 2 cross-tip screwdriver.

c. Remove KU stowage box door latch (4).

I–6.12.2 REPLACE KEYBOARD UNIT (KU) STOWAGE BOX DOOR LATCH

NOTE

The same KU stowage box door latch part is used for each side of the keyboard stowage box. There is a bumper on one side of the latch that should be positioned toward the side of the keyboard stowage box when fastened.

a. Align KU stowage box door latch mounting holes with mounting holes in KU stowage box.

b. Install and tighten two pan head screws (1), lock washers (2) and flat washers (3) for each KU stowage box door latch (4), using a No. 2 cross-tip screwdriver.

c. Pull rubber T-handles and fasten KU stowage box door latches.

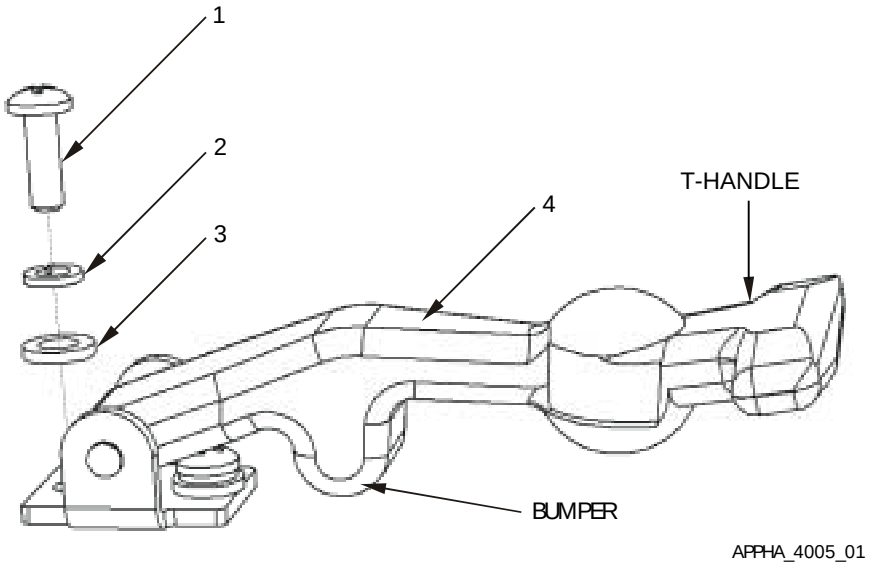

Figure I-9. Remove and Replace Keyboard Unit (KU) Stowage Box Door Latch

Key and Parts List for Figure I-9

ITEM NO.	NOMENCLATURE	CAGE CODE	PART NUMBER	NSN	QTY	SMR
1	Screw, Pan Head	96906	MS35206-229	5305-00-984-4989	4	PAOZZ
2	Washer, Lock	96906	MS35338-41	5310-00-045-4007	4	PAOZZ
3	Washer, Flat	96906	MS27183-5	5310-00-983-8483	4	PAOZZ
4	(KU stowage box door latch) Latch, Thumb	94222	37-20-071-20	5340-01-351-3340	2	PAOZZ

APPENDIX J

SUPPLEMENTARY INFORMATION FOR

M88A1 HERCULES

TABLE OF CONTENTS

Page
J–1 GENERAL J–3
J–2 COMPONENT ITEM NUMBERS AND PART NUMBERS J–3
J–3 SYSTEM INTERFACES J–3
J–3.1 MECHANICAL J–3
J–3.2 CABLE INTERFACES J–4
J–4 COMPONENT LOCATION J–6
J–4.1 GENERAL LOCATION J–6
J–4.2 MOUNTING J–7
J–5 PLATFORM-UNIQUE TROUBLESHOOTING J–7
J–6 REMOVAL/REPLACEMENT IN THE PLATFORM J–8
J–6.1 FUNCTIONAL CHECK J–8
J–6.2 REMOVE/REPLACE W1 POWER CABLE J–9
J–6.3 REMOVE/REPLACE W2 DISPLAY CABLE J–11
J–6.4 REMOVE/REPLACE W3 SERIAL INTERFACE ADAPTER DEVICE (SIAD) J–12
J–6.5 REMOVE/REPLACE W3P PLGR CABLE J–13
J–6.6 REMOVE/REPLACE W3N INC CABLE J–14
J–6.7 REMOVE/REPLACE W4 AUDIO CABLE J–15
J–6.8 REMOVE/REPLACE PU ISOLATION ASSEMBLY J–17
J–6.9 REMOVE/REPLACE DU ISOLATION ASSEMBLY J–21
J–6.10 REMOVE/REPLACE RAM-BALL ASSEMBLY J–24
J–6.11 REMOVE/REPLACE KEYBOARD UNIT (KU) STOWAGE BOX J–28
J–6.12 REMOVE/REPLACE KEYBOARD UNIT (KU) STOWAGE BOX DOOR LATCHES J–30

LIST OF ILLUSTRATIONS

Page
Figure J-1. Equipment Interface Block Diagram J–5
Figure J-2. Relative Component Locations J–6
Figure J-3. M88A1 Shelf-Mounted Equipment J–7
Figure J-4. Cable Run J–16
Figure J-5. Remove and Replace PU Isolation Assembly J–19
Figure J-6. Remove and Replace DU Isolation Assembly J–23
Figure J-7. Remove and Replace RAM-Ball Assembly J–26
Figure J-8. Remove and Replace Keyboard Unit (KU) Stowage Box J–28
Figure J-9. Remove and Replace Keyboard Unit (KU) Stowage Box Door Latches J–31

J–1 GENERAL

This appendix describes the interfaces between the FBCB2 equipment and the M88A1 HERCULES Tank Recovery Vehicle. This appendix also identifies the component parts of the M88A1 platform installation kit and details the removal and replacement procedures particular to the M88A1 HERCULES.

J–2 COMPONENT ITEM NUMBERS AND PART NUMBERS

Key and Parts List tables contained in the Removal and Replacement section of this Appendix serve a dual purpose. Use the Item Numbers in the Key to identify components and attaching hardware shown in the Figures illustrating the tasks. The nomenclature and part number for the hardware and equipment mounting components of the installation kit also are keyed to the Item Numbers in the tables. Additional parts ordering information, such as Contractor and Government Entity code (CAGE); National Stock Number (NSN); quantity; and Source, Maintenance and Recoverability (SMR) codes, are provided. The Key and Parts List follow the task illustrations.

J–3 SYSTEM INTERFACES

J–3.1 MECHANICAL

The mechanical hardware-to-hardware interfaces include:

a. Cables

b. Processing Unit (PU)

c. Display Unit (DU)

d. Keyboard Unit (KU)

J–3.2 CABLE INTERFACES

Figure J-1 illustrates a block diagram of the interface between the FBCB2 equipment and the M88A1 Hercules (Platform). Figure J-1 also illustrates the signal and control interfaces along with the terminal connector labels (e.g., P1, P2). The purpose of each cable is listed below:

Cable Name	Purpose
W1–Cable	Supplies vehicle power (28 VDC) to the AN/UYK-128 (V) computer and its subassemblies.
W2–Cable	Supplies power and signals to the Display Unit (DU) and Keyboard Unit (KU). Returns Man Machine Interface (MMI) information from the KU to the Processor Unit (PU).
W3–Cable	The Serial Interface Adapter Device (SIAD) is a conduit assembly that breaks out each of the serial interface ports to a connector.
W3P–Cable	Collects position and time information from the PLGR.
W3N–Cable	Provides duplex communication between the PU, Internet Controller (INC) and radios.
W4–Cable	Connects audio signals from the PU to the Intercom system and Combat Vehicle Crew (CVC) Helmet.
W5–Cable	The Expansion Interface Adapter Device (EIAD) is connected to the Universal Serial Bus (USB) connector only when this vehicle is to be used in a Tactical Operations Center (TOC) setup. When used in this configuration, the EIAD is connected between the PU J5 connector and local router.
Ground Strap	Provides safety ground for the PU.
Ground Strap	Provides safety ground for the DU.

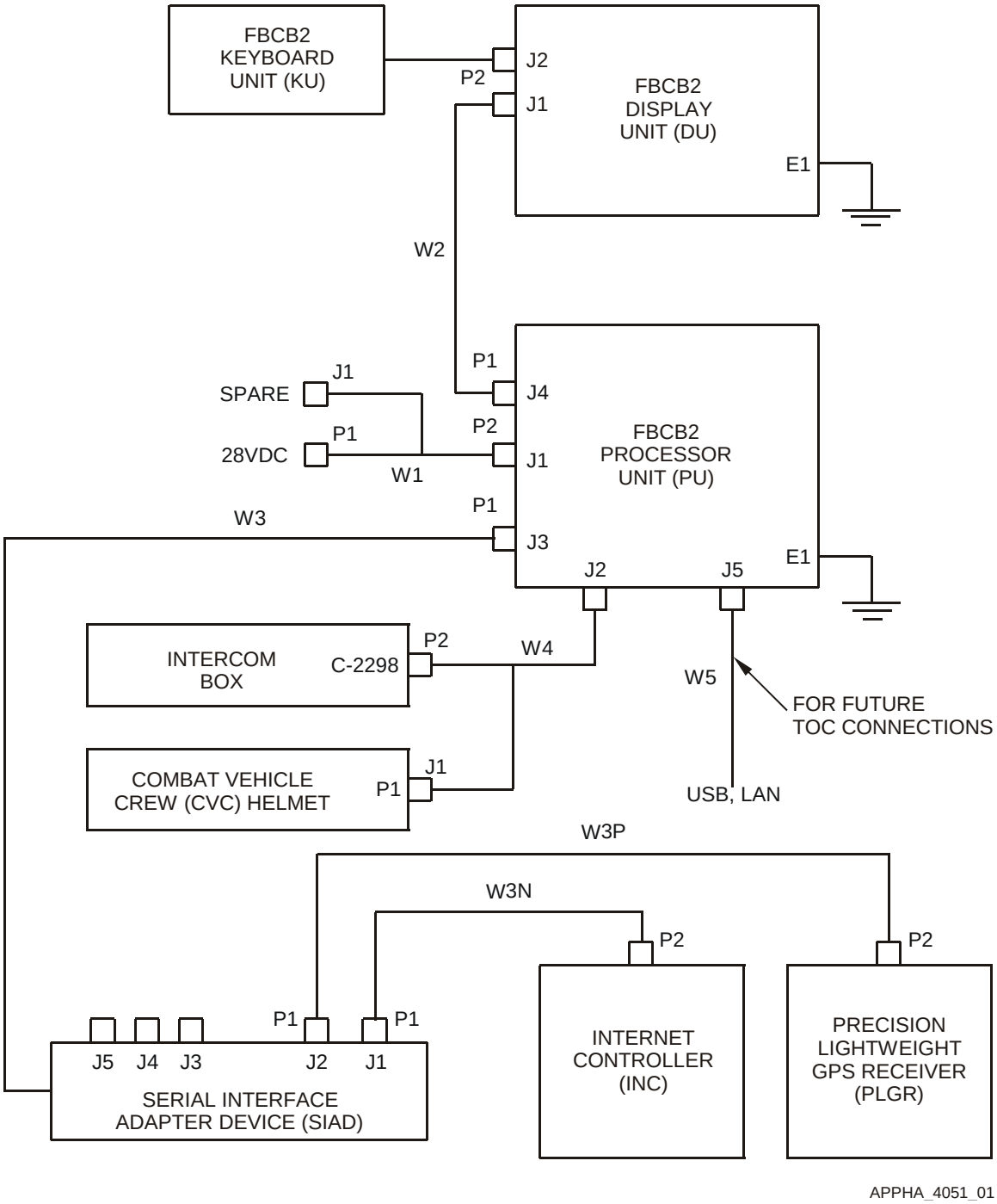

Figure J-1. Equipment Interface Block Diagram

J–4 COMPONENT LOCATION

J–4.1 GENERAL LOCATION

Figure J-2 shows the relative location of the FBCB2 computer equipment and mounting components in the M88A1 crew compartment.

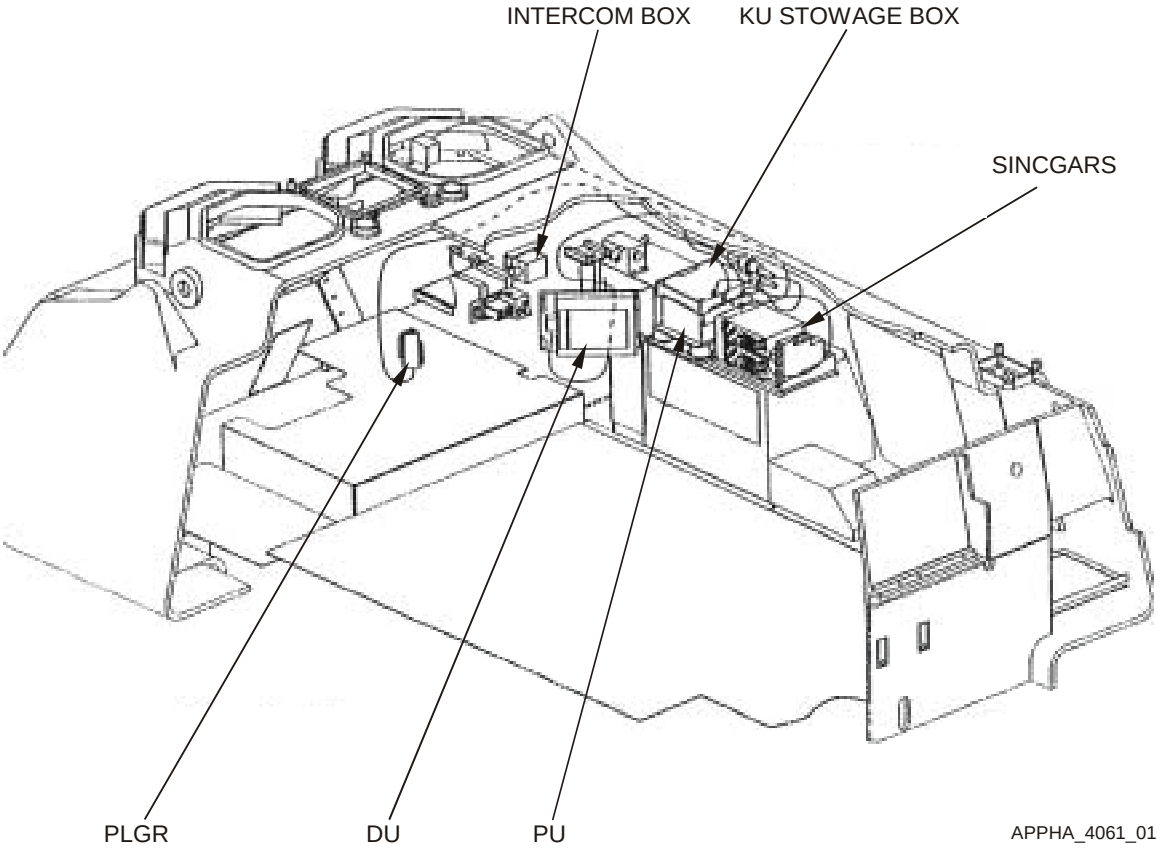

Figure J-2. Relative Component Locations

J–4.2 MOUNTING

Figure J-3 illustrates how the FBCB2 equipment is mounted on the table within the M88A1 crew compartment.

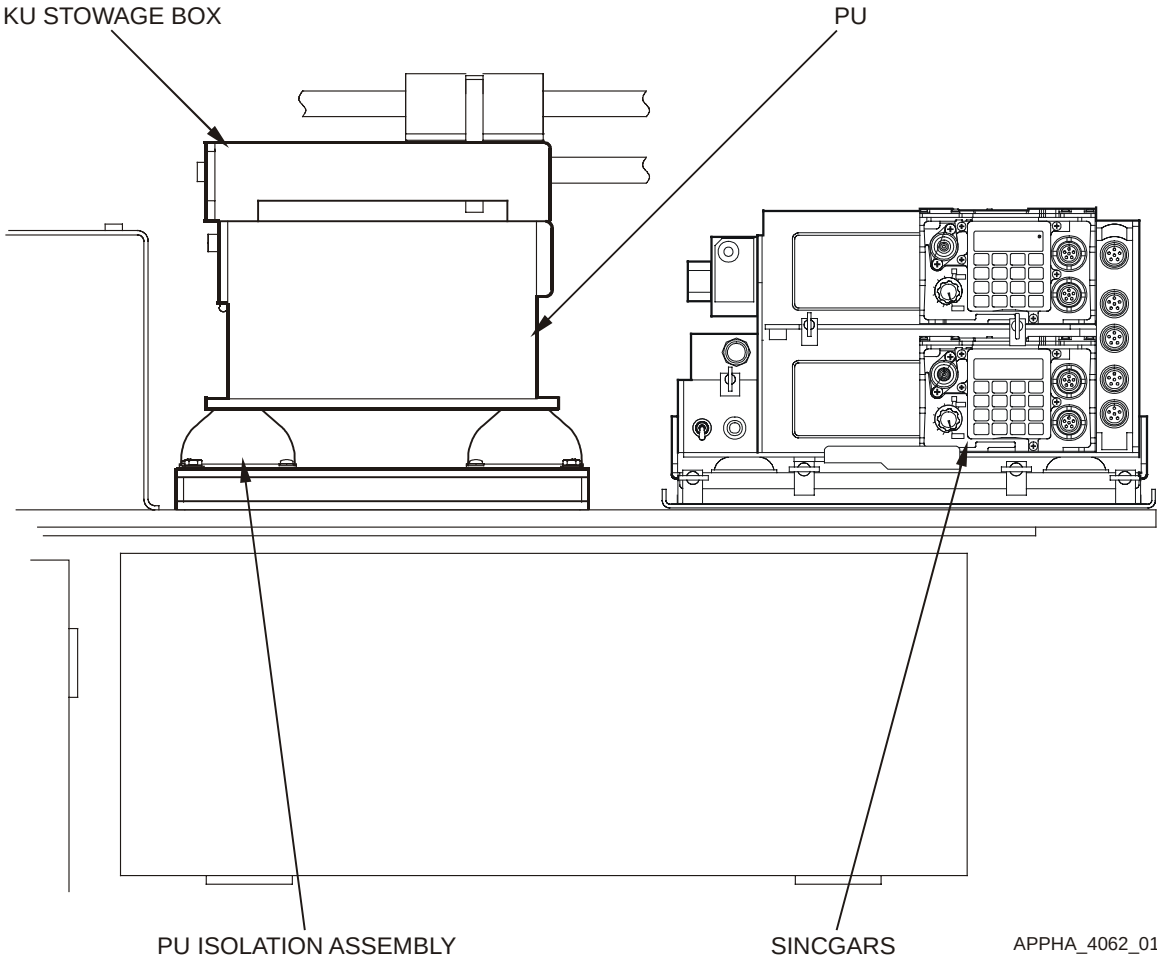

Figure J-3. M88A1 Shelf-Mounted Equipment

J–5 PLATFORM-UNIQUE TROUBLESHOOTING

There are no unique troubleshooting procedures for this vehicle.

J–6 REMOVAL/REPLACEMENT IN THE PLATFORM

Most installations must be tailored to the platform. Hardware and brackets are unique to the installation. Before a part or assembly is removed from a vehicle, fill out a “Maintenance Request” DA Form 2407. One copy of this completed form must remain with the vehicle and the remaining copies must be kept with the faulty component. To prove the operability of the system after an item is replaced, perform the system Functional Check.

J–6.1 FUNCTIONAL CHECK

J–6.1.1 POWER UP

Power up and initialize all interface equipment and the AN/UYK-128(V) In Accordance With (IAW) the Operator’s Manual TM 11-7010-326-10, or Pocket Guide TB 11-7010-326-10.

J–6.1.2 VERIFICATION

NOTE

Observe that the Display Unit PWR, DISP and CPU green LED lights are lit.

a. Observe that the PLGR synchronizes with PU, indicated by the PLGR dialog box showing green.

b. Observe that the Router synchronizes with the PU, indicated by the Router dialog box showing green.

c. At the Session Manager screen, select OPS button to display the OPS screen.

d. Verify the GPS status is either green or amber on the Classification/Status Bar.

e. Verify the Communications status is either green or amber on the Classification/Status Bar.

J–6.1.3 POWER DOWN

Power down all interface equipment and the AN/UYK-128(V) IAW the Operator’s Manual TM 11-7010-326-10, or Pocket Guide TB 11-7010-326-10.

J–6.2 REMOVE/REPLACE W1 POWER CABLE

Refer to Figure J-4.

J–6.2.1 REMOVE W1 POWER CABLE

WARNING

Before conducting maintenance involving the removal and replacement of system components, ensure that all power to the FBCB2 system is off (including power from the vehicle). Failure to comply with warning may result in equipment damage or injury to personnel.

a. Power down AN/UYK-128(V) system IAW Operator's Manual TM 11-7010-326-10, or Pocket Guide TB 11-7010-326-10.

b. Power down SINCGARS IAW TM 11-5820-890-10-8.

c. Unlatch and slide the Vehicle Amplifier-Adapter (VAA) forward from SINCGARS Mounting Base (MB) to allow access to W1 cable connector IAW TM 11-5820-890-10-8.

d. Disconnect W1-P1 cable connector from the SINCGARS Mounting Base (MB) (MT-6352/VRC) A4-J2 connector.

e. Loosen two self-locking front retainers on PU until sleeves clear front hooks.

f. Slide PU forward until mounting brackets clear rear retainers.

g. Rotate PU so connections can be accessed.

h. Disconnect W1-P2 cable connector from PU J1 connector.

i. Install protective cap on PU J1 connector.

NOTE

Note cable routing and tie-wrap locations before removing cable or tie-wraps.

j. Remove tie-wraps securing W1 cable using diagonal wire cutters.

k. Remove W1 power cable (1).

J–6.2.2 REPLACE W1 POWER CABLE

a. Route W1 power cable (1).

b. Remove protective cap from PU J1 connector.

c. Connect W1-P2 cable connector to PU J1 connector.

d. Connect W1-P1 cable connector to SINCGARS Mounting Base (MB) (MT-6352/VRC) A4-J2 connector.

e. Slide SINCGARS VAA (AM-7239/VRC) back into original position on mounting base and secure IAW TM 11-5820-890-10-8.

f. Align PU mounting brackets with guides on top plate of isolation assembly.

g. Slide PU mounting brackets into rear retainers until PU seats.

h. Tighten two self-locking front retainers to secure PU.

i. Secure W1 cable using tie-wraps.

j. Dress tie-wraps using diagonal wire cutters.

k. Perform Functional Check IAW paragraph J–6.1.

J–6.3 REMOVE/REPLACE W2 DISPLAY CABLE

Refer to Figure J-4.

J–6.3.1 REMOVE W2 DISPLAY CABLE

WARNING

Before conducting maintenance involving the removal and replacement of system components, ensure that all power to the FBCB2 system is off (including power from the vehicle). Failure to comply with warning may result in equipment damage or injury to personnel.

a. Power down AN/UYK-128(V) system IAW Operator's Manual TM 11-7010-326-10, or Pocket Guide TB 11-7010-326-10.

b. Loosen two self-locking front retainers on PU until sleeves clear front hooks.

c. Slide PU forward until mounting brackets clear rear retainers.

d. Rotate PU so connections can be accessed.

e. Disconnect W2-P1 cable connector from PU J4 connector.

f. Install protective cap on PU J4 connector.

g. Disconnect W2-P2 cable connector from display J1 connector.

h. Install protective cap on display J1 connector.

NOTE

Note cable routing and tie-wrap locations before removing cable or tie-wraps.

i. Remove tie-wraps from W2 cable using diagonal wire cutters.

j. Remove W2 display cable (5).

J–6.3.2 REPLACE W2 DISPLAY CABLE

a. Route W2 display cable (5).

b. Remove protective cap from display J1 connector.

c. Connect W2-P2 cable connector to display J1 connector.

d. Remove protective cap from PU J4 connector.

e. Connect W2-P1 cable connector to PU J4 connector.

f. Align PU mounting brackets with guides on top plate of isolation assembly.

g. Slide PU mounting brackets into rear retainers until PU seats.

h. Tighten two self-locking front retainers to secure PU.

i. Secure W2 cable using tie-wraps.

j. Dress tie-wraps using diagonal wire cutters.

k. Perform Functional Check IAW paragraph J–6.1.

J–6.4 REMOVE/REPLACE W3 SERIAL INTERFACE ADAPTER DEVICE (SIAD)

Refer to Figure J-4.

J–6.4.1 REMOVE W3 SERIAL INTERFACE ADAPTER DEVICE (SIAD)

WARNING

Before conducting maintenance involving the removal and replacement of system components, ensure that all power to the FBCB2 system is off (including power from the vehicle). Failure to comply with warning may result in equipment damage or injury to personnel.

a. Power down AN/UYK-128(V) system IAW Operator's Manual TM 11-7010-326-10, or Pocket Guide TB 11-7010-326-10.

b. Disconnect W3N-P1 cable connector from W3 SIAD J1 connector.

c. Disconnect W3P-P1 cable connector from W3 SIAD J2 connector.

d. Loosen two self-locking front retainers on PU until sleeves clear front hooks.

e. Slide PU forward until mounting brackets clear rear retainers.

f. Rotate PU so connections can be accessed.

g. Disconnect W3 SIAD-P1 cable connector from PU J3 connector.

h. Install protective cap on PU J3 connector.

NOTE

Note cable routing and tie-wrap locations before removing cable or tie-wraps.

i. Remove tie-wraps securing W3 SIAD using diagonal wire cutters.

j. Remove W3 SIAD (2).

J–6.4.2 REPLACE W3 SERIAL INTERFACE ADAPTER DEVICE (SIAD)

a. Route W3 SIAD (2).

b. Remove protective cap from PU J3 connector.

c. Connect W3 SIAD-P1 cable connector on PU J3 connector.

d. Align PU mounting brackets with guides on top plate of isolation assembly.

e. Slide PU mounting brackets into rear retainers until PU seats.

f. Tighten two self-locking front retainers to secure PU.

g. Connect W3P-P1 cable connector to W3 SIAD J2 connector.

h. Connect W3N-P1 cable connector to W3 SIAD J1 connector.

i. Secure W3 SIAD using tie-wraps.

j. Dress tie-wraps using diagonal wire cutters.

k. Perform Functional Check IAW paragraph J–6.1.

J–6.5 REMOVE/REPLACE W3P PLGR CABLE

Refer to Figure J-4.

J–6.5.1 REMOVE W3P PLGR CABLE

WARNING

Before conducting maintenance involving the removal and replacement of system components, ensure that all power to the FBCB2 system is off (including power from the vehicle). Failure to comply with warning may result in equipment damage or injury to personnel.

a. Power down AN/UYK-128(V) system IAW Operator's Manual TM 11-7010-326-10, or Pocket Guide TB 11-7010-326-10.

b. Disconnect W3P-P1 cable connector from W3 SIAD J2 connector.

c. Remove PLGR from mounting rack.

d. Disconnect W3-P2 cable connector from PLGR J2 connector using an offset flat screwdriver.

NOTE

Note cable routing and tie-wrap locations before removing cable or tie-wraps.

e. Remove tie-wraps securing W3P cable using diagonal wire cutters.

f. Remove W3P cable (4).

J–6.5.2 REPLACE W3P PLGR CABLE

a. Route W3P cable (4).

b. Connect W3P-P2 cable connector to PLGR J2 connector using an offset flat screwdriver.

c. Install PLGR into mounting rack.

d. Connect W3P-P1 cable connector to W3 SIAD J2 connector.

e. Secure W3P cable using tie-wraps.

f. Dress tie-wraps using diagonal wire cutters.

g. Perform Functional Check IAW paragraph J–6.1.

J–6.6 REMOVE/REPLACE W3N INC CABLE

Refer to Figure J-4.

J–6.6.1 REMOVE W3N INC CABLE

WARNING

Before conducting maintenance involving the removal and replacement of system components, ensure that all power to the FBCB2 system is off (including power from the vehicle). Failure to comply with warning may result in equipment damage or injury to personnel.

a. Power down AN/UYK-128(V) system IAW Operator's Manual TM 11-7010-326-10, or Pocket Guide TB 11-7010-326-10.

b. Disconnect W3N-P1 cable connector from W3 SIAD J1 connector.

c. Disconnect W3N-P2 cable connector from SINCGARS INC J6 connector.

NOTE

Note cable routing and tie-wrap locations before removing cable or tie-wraps.

d. Remove tie-wraps securing the W3N cable using diagonal cutters.

e. Remove W3N cable (3).

J–6.6.2 REPLACE W3N INC CABLE

a. Route W3N cable (3).

b. Connect W3N-P2 cable connector to SINCGARS INC J6 connector.

c. Connect W3N-P1 cable connector to W3 SIAD J1 connector.

d. Secure W3N cable using tie-wraps.

e. Dress tie-wraps using diagonal wire cutters.

f. Perform Functional Check IAW paragraph J–6.1.

J–6.7 REMOVE/REPLACE W4 AUDIO CABLE

Refer to Figure J-4.

J–6.7.1 REMOVE W4 AUDIO CABLE

WARNING

Before conducting maintenance involving the removal and replacement of system components, ensure that all power to the FBCB2 system is off (including power from the vehicle). Failure to comply with warning may result in equipment damage or injury to personnel.

a. Power down AN/UYK-128(V) system IAW Operator's Manual TM 11-7010-326-10, or Pocket Guide TB 11-7010-326-10.

b. Loosen two self-locking front retainers on PU until sleeves clear front hooks.

c. Slide PU forward until mounting brackets clear rear retainers.

d. Rotate PU so connections can be accessed.

e. Disconnect W4-P1 cable connector from PU J2 connector.

f. Install protective cap on PU J2 connector.

g. Disconnect W4-P2 cable connector from Intercom Box C-2298 connector.

h. Disconnect W4-J1 cable connector from Combat Vehicle Crew (CVC) helmet P1 connector.

NOTE

Note cable routing and tie-wrap locations before removing cable or tie-wraps.

i. Remove tie-wraps securing W4 cable using diagonal wire cutters.

j. Remove W4 cable (6).

J–6.7.2 REPLACE W4 AUDIO CABLE

a. Route W4 cable (6).

b. Connect W4-J1 cable connector to CVC helmet P1 connector.

c. Connect W4-P2 cable connector to the Intercom Box C-2298 connector.

d. Remove protective cap from PU J2 connector.

e. Connect W4-P1 cable connector to PU J2 connector.

f. Align PU mounting brackets with guides on top plate of isolation assembly.

g. Slide PU mounting brackets into rear retainers until PU seats.

h. Tighten two self-locking front retainers to secure PU.

i. Secure W4 cable using tie-wraps.

j. Dress tie-wraps using diagonal wire cutters.

k. Perform Functional Check IAW paragraph J–6.1.

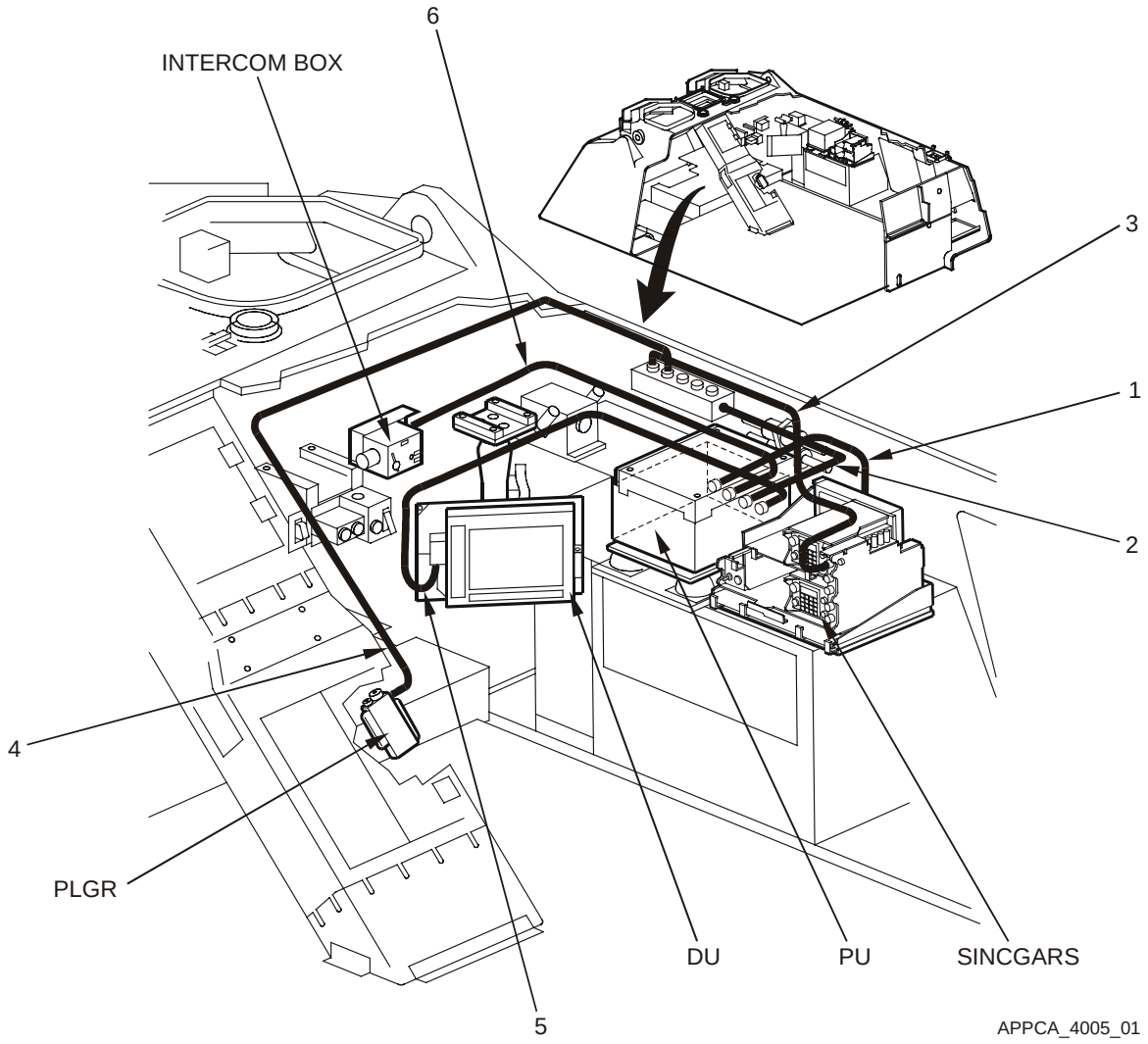

Figure J-4. Cable Run

Key and Parts List for Figure J-4

ITEM NO.	NOMENCLATURE	CAGE CODE	PART NUMBER	NSN	QTY	SMR
1	Cable Assembly W1	0J198	861880-5	5995-01-478-5078	1	PAODD
2	Adapter Assy, SIAD W3	0J198	881331-1	4920-01-478-3722	1	PAODD
3	Cable Assembly W3N	0J198	881336-2	5995-01-478-4922	1	PAODD
4	Cable Assembly W3P	0J198	881335-4	5995-01-478-4906	1	PAODD
5	Cable Assembly W2	0J198	881327-3	5995-01-478-4877	1	PAODD
6	Cable Assembly W4	0J198	881270-1	5995-01-478-4924	1	PAODD
--	Strap, Tie Down, Elect	39428	7130K31		50	PAOZZ

J–6.8 REMOVE/REPLACE PU ISOLATION ASSEMBLY

Refer to Figure J-5.

NOTE

Ground straps are attached to components at one end (PU and DU) and a frame ground at the other end. Regardless of where the ground strap terminates, it is usually a burnished (void of paint) area. If the ground strap is removed from a burnished area make sure to return it to the same burnished area. Where applicable, always connect the ground strap first when assembling, and disconnect the ground strap last when disassembling.

J–6.8.1 REMOVE PU ISOLATION ASSEMBLY

WARNING

Before conducting maintenance involving the removal and replacement of system components, ensure that all power to the FBCB2 system is off (including power from the vehicle). Failure to comply with warning may result in equipment damage or injury to personnel.

a. Power down AN/UYK-128(V) system IAW Operator's Manual TM 11-7010-326-10, or Pocket Guide TB 11-7010-326-10.

NOTE

Do not remove hard disk drive cartridge (RHDDC) or locking bracket from PU.

b. Remove PU IAW Unit Maintenance Manual TM 11-7010-326-20&P, Chapter 2.

c. Remove one hex head screw (9), lock washer (7), flat washer (6) and ground strap from PU isolation assembly (1) bottom plate, PU mounting strip (2) and PU mounting plate (4) using a 7/16" socket with ratchet and 3" extension.

d. Remove remaining three hex head screws (9), lock washers (7) and flat washers (6) from PU isolation assembly (1) bottom plate, PU mounting strips (2) and PU mounting plate (4) using a 7/16" socket with ratchet and 3" extension.

e. Remove two hex head screws (8), lock washers (7) and flat washers (6) from PU isolation assembly (1) bottom plate, center mounting strip (3) and PU mounting plate (4) using a 7/16" socket with ratchet and 3" extension.

f. Remove PU isolation assembly (1) from PU mounting strips (2, 3) and PU mounting plate (4).

J–6.8.2 REPLACE PU ISOLATION ASSEMBLY

a. Align six holes in PU isolation assembly (1) bottom plate with holes in PU mounting strips (2, 3) and PU mounting plate (4) installation holes.

NOTE

To ensure positive ground, PU ground strap must make direct contact with bare metal. Ensure PU ground strap is installed in its original location at the PU isolation assembly bottom plate mounting hole. Slip the lock washer, flat washer and then the ground strap on the mounting screw before installing and tightening screw.

b. Install one hex head screw (9), lock washer (7), flat washer (6) and ground strap on PU isolation assembly (1) bottom plate, PU mounting strip (2) and PU mounting plate (4) using a 7/16” socket with ratchet and 3” extension.

c. Install remaining three hex head screws (9), lock washers (7) and flat washers (6) on PU isolation assembly (1) bottom plate, PU mounting strips (2) and PU mounting plate (4) using a 7/16" socket with ratchet and 3” extension.

d. Install two hex head screws (8), lock washers (7) and flat washers (6) on PU isolation assembly (1) bottom plate, center mounting strip (3) and PU mounting plate (4) using a 7/16" socket with ratchet and 3” extension.

e. Replace PU IAW Unit Maintenance Manual TM 11-7010-326-20&P, Chapter 2.

f. Perform Functional Check IAW paragraph J–6.1.

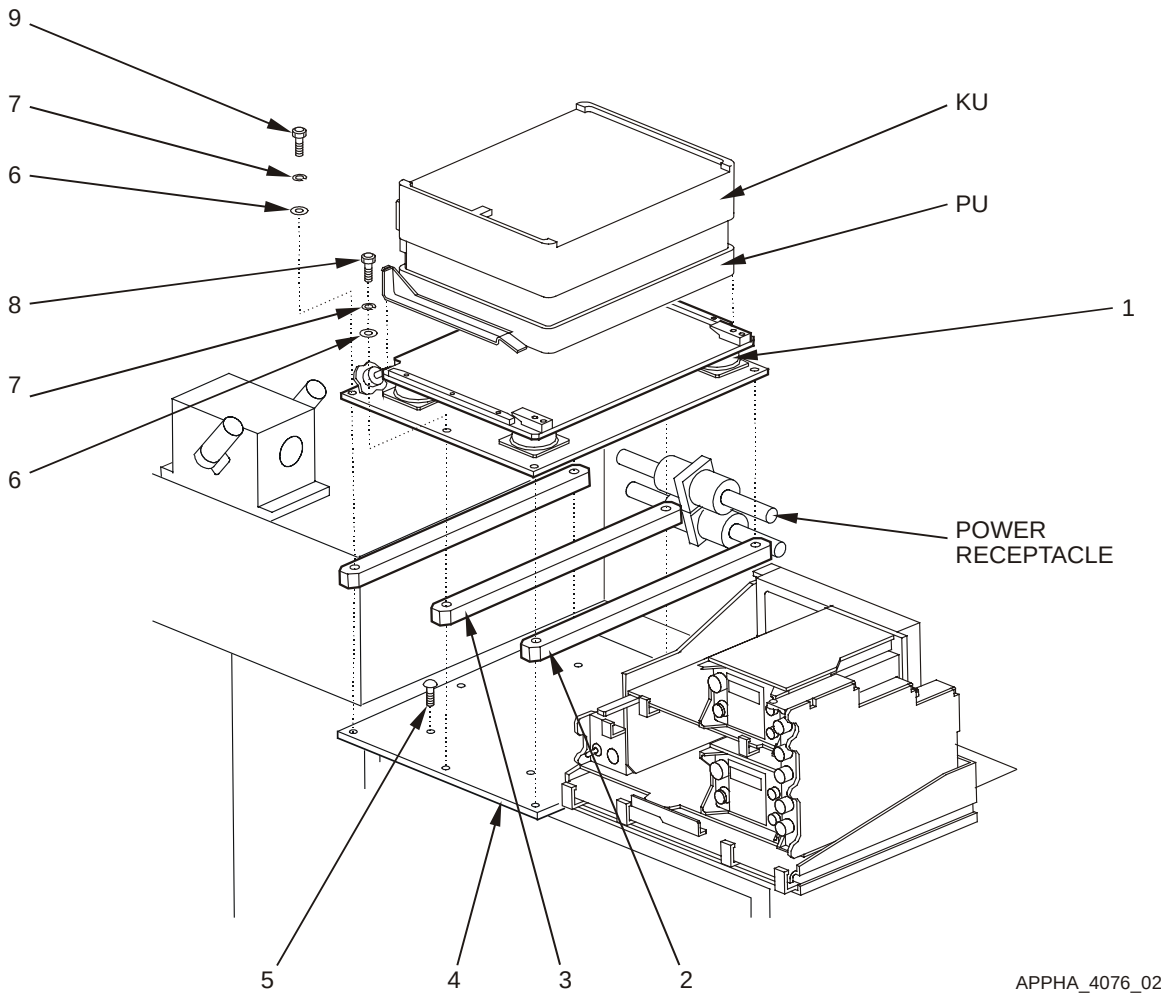

Figure J-5. Remove and Replace PU Isolation Assembly

Key and Parts List for Figure J-5

ITEM NO.	NOMENCLATURE	CAGE CODE	PART NUMBER	NSN	QTY	SMR
1	(PU isolation assembly) Plate, Resilient Mount PU	0J198	872826-1	5340-01-481-5742	1	PAODD
2	Strips, PU Mounting	0J198	889497-1		2	XBOOO
3	Strip, Center Mounting	0J198	889497-2		1	XBOOO
4	(PU mounting plate) Bracket, PU Mounting	80212	4250223		1	PAOZZ
5	Screw, Machine	96906	MS35190-304	5305-01-185-4606	4	PAOZZ
6	Washer, Flat	96906	MS27183-10	5310-00-809-4058	6	PAOZZ
7	Washer, Lock	96906	MS35333-40	5310-00-550-1130	6	PAOZZ
8	Screw, Cap, Hexagon	80204	B1821AH025C075N	5605-01-389-8000	2	PAOZZ
9	Screw, Cap, Hexagon	80204	B1821AH025C150N	5305-01-466-7243	4	PAOZZ
--	Assembly, PU Lock	0J198	861865-1		1	XBOOO
--	Bracket, Locking	0J198	861871-1		1	XBOZZ
--	Screw	80205	MS35190-253	5305-00-059-4568	2	PAOZZ

J–6.9 REMOVE/REPLACE DU ISOLATION ASSEMBLY

Refer to Figure J-6.

NOTE

Ground straps are attached to components at one end (PU and DU) and a frame ground at the other end. Regardless of where the ground strap terminates, it is usually a burnished (void of paint) area. If the ground strap is removed from a burnished area make sure to return it to the same burnished area. Where applicable, always connect the ground strap first when assembling, and disconnect the ground strap last when disassembling.

J–6.9.1 REMOVE DU ISOLATION ASSEMBLY

WARNING

Before conducting maintenance involving the removal and replacement of system components, ensure that all power to the FBCB2 system is off (including power from the vehicle). Failure to comply with warning may result in equipment damage or injury to personnel.

a. Power down AN/UYK-128(V) system IAW Operator's Manual TM 11-7010-326-10, or Pocket Guide TB 11-7010-326-10.

b. Remove DU IAW Unit Maintenance Manual TM 11-7010-326-20&P, Chapter 2.

NOTE

Note cable routing and tie-wrap locations before removing cable or tie-wraps.

c. Remove tie-wraps securing W2 display cable and ground strap to DU isolation assembly using diagonal wire cutters.

d. Remove one self-locking wing nut (3), safety lanyard (6), spacer (4) and square neck bolt (5) from RAM-Ball display base with ball and DU isolation assembly (2) bottom plate.

CAUTION

Ensure support is provided to display while loosening RAM-Ball knob. Failure to comply could result in display falling from RAM-Ball mount causing equipment damage.

e. Loosen RAM-Ball knob while supporting DU isolation assembly (2) until RAM-Ball display base with ball can be lifted free of RAM-Ball socket arm.

f. Remove remaining three self-locking wing nuts (3), spacers (4) and square neck bolts (5) from RAM-Ball display base with ball and DU isolation assembly (2) bottom plate.

g. Remove DU isolation assembly (2).

J–6.9.2 REPLACE DU ISOLATION ASSEMBLY

a. Align four RAM-Ball display base with ball installation holes with slots in the DU isolation assembly (2) bottom plate.

b. Install three square neck bolts (5), spacers (4) and self-locking wing nuts (3) on RAM-Ball display base with ball and DU isolation assembly (2) bottom plate.

CAUTION

Ensure RAM-Ball is free of dirt and contaminants before reassembling. Failure to comply can result in slippage or excess wear of RAM-Ball assembly.

c. Inspect and clean RAM-Ball socket arm and display base with ball, as necessary, using clean lint-free wipes.

d. Insert RAM-Ball display base with ball into RAM-Ball socket arm while supporting DU isolation assembly (2).

e. Adjust viewing angle and tighten RAM-Ball knob.

f. Install remaining square neck bolt (5), spacer (4), safety lanyard (6) and self-locking wing nut (3).

g. Secure W2 cable and ground strap to DU isolation assembly (2) bottom plate using tie-wraps.

h. Dress tie-wraps using diagonal wire cutters.

i. Install DU IAW Unit Maintenance Manual TM 11-7010-326-20&P, Chapter 2.

j. Perform Functional Check IAW paragraph J–6.1.

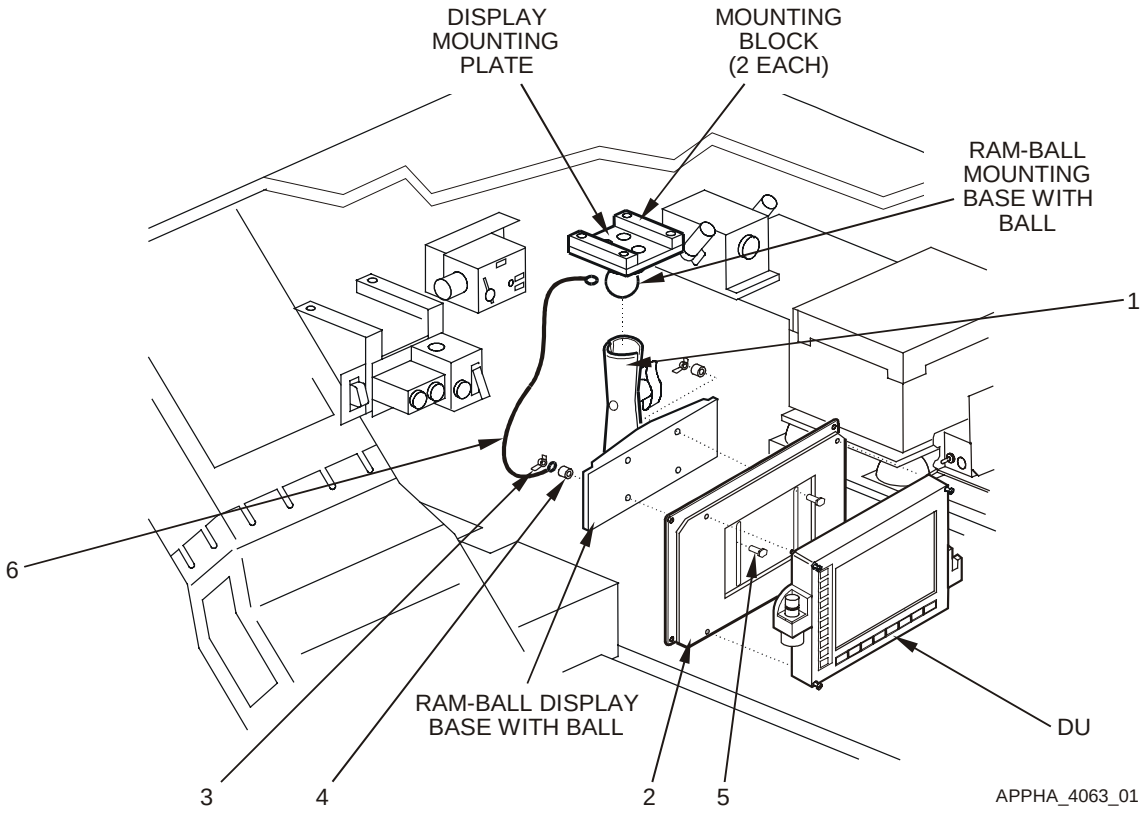

Figure J-6. Remove and Replace DU Isolation Assembly

Key and Parts List for Figure J-6

ITEM NO.	NOMENCLATURE	CAGE CODE	PART NUMBER	NSN	QTY	SMR
1	(RAM-Ball assembly) Mount, RAM-Ball	0J198	889489-1		1	PAOZZ
2	(DU isolation assembly) Plate, Resilient Mount DU	0J198	872870-1		1	PAODD
3	Nut, Self-Locking, Wing	96906	MS51553-420	5310-01-384-2546	4	PAOZZ
4	Spacer, Aluminum	57177	10705AL315C		4	PAOZZ
5	Bolt, Square Neck	96906	MS35751-17	5306-00-889-2943	4	PAOZZ
6	(Safety Lanyard) Wire Rope Assembly 2’	39428	30645T11		1	PAOZZ
--	Assembly, Lock DU	0J198	872843-1		1	XBOOO
--	Bracket, Locking	0J198	861871-3		1	XBOZZ
--	Washer, Lock	96906	MS35338-42	5310-00-045-3299	2	PAOZZ
--	Screw	80205	MS35190-253	5305-00-059-4568	2	PAOZZ

J–6.10 REMOVE/REPLACE RAM-BALL ASSEMBLY

Refer to Figure J-7.

J–6.10.1 REMOVE RAM-BALL ASSEMBLY

WARNING

Before conducting maintenance involving the removal and replacement of system components, ensure that all power to the FBCB2 system is off (including power from the vehicle). Failure to comply with warning may result in equipment damage or injury to personnel.

a. Power down AN/UYK-128(V) system IAW Operator's Manual TM 11-7010-326-10, or Pocket Guide TB 11-7010-326-10.

b. Remove DU IAW Unit Maintenance Manual TM 11-7010-326-20&P, Chapter 2.

NOTE

Note cable routing and tie-wrap locations before removing cable or tie-wraps.

c. Remove tie-wraps securing W2 display cable and ground strap to DU isolation assembly (7) using diagonal wire cutters.

d. Remove one self-locking wing nut (10), safety lanyard (12), spacer (9) and square neck bolt (9) from RAM-Ball display base.

CAUTION

Ensure support is provided to display while loosening RAM-Ball knob. Failure to comply could result in display falling from RAM-Ball mount causing equipment damage.

e. Loosen RAM-Ball knob while supporting DU isolation assembly until RAM-Ball display base with ball can be lifted free of RAM-Ball socket arm.

f. Remove remaining three self-locking wing nuts (10), spacers (9) and square neck bolts (9) from RAM-Ball display base with ball and DU isolation assembly (7) bottom plate.

g. Remove RAM-Ball display base with ball from DU isolation assembly.

h. Remove RAM-Ball socket arm from RAM-Ball mounting base with ball on display mounting plate (1).

i. Remove three flat head bolts (11), flat washers (3), lock washers (4) and hex nuts (13) from RAM-Ball mounting base with ball and display mounting plate (1) using a No. 3 cross-tip screwdriver and a 7/16" open-end wrench.

j. Remove RAM-Ball mounting base with ball from display mounting plate (1).

J–6.10.1 REMOVE RAM-BALL ASSEMBLY (Continued)

NOTE

If removing display mounting plate (1) and DU mounting blocks (2) on vehicle ceiling, continue with the following steps.

k. Remove one hex head screw (5), lock washer (4), flat washer (3) and safety lanyard (12) from display mounting plate (1) and DU mounting block (2).

l. Remove remaining three hex head screws (5), lock washers (4) and flat washers (3) display mounting plate (1) and DU mounting block (2).

m. Remove display mounting plate (1) and two DU mounting blocks (2) from ceiling.

J–6.10.2 REPLACE RAM-BALL ASSEMBLY

NOTE

If installing display mounting plate (1) and DU mounting blocks (2) on vehicle ceiling, perform steps a through c, otherwise begin at step d.

a. Align four holes in display mounting plate (1) with holes in the two DU mounting blocks (2) and ceiling installation inserts.

b. Install three hex head screws (5), lock washers (4) and flat washers (3) on display mounting plate (1) and DU mounting blocks (2) to secure assembly to ceiling.

c. Install remaining hex head screw (5), lock washer (4), flat washer (3) and safety lanyard (12) on display mounting plate (1) and DU mounting blocks (2).

d. Align three holes in RAM-Ball mounting base with ball with display mounting plate (1) installation holes.

e. Install three flat head bolts (11), flat washers (3), lock washers (4) and hex nuts (13) from RAM-Ball mounting base with ball and display mounting plate (1) using a No. 3 cross-tip screwdriver and 7/16” open-end wrench.

CAUTION

Ensure RAM-Ball is free of dirt and contaminants before reassembling. Failure to comply can result in slippage or excess wear of RAM-Ball assembly.

f. Inspect and clean RAM-Ball socket arm, display and mounting base with ball, as necessary, using a clean lint-free wipes.

g. Install RAM-Ball socket arm on RAM-Ball mounting base with ball on display mounting plate (1).

J–6.10.2 REPLACE RAM-BALL ASSEMBLY (Continued)

h. Align four RAM-Ball display base with ball installation holes with slots in DU isolation assembly (7) bottom plate.

i. Install three square neck bolts (8), spacers (9) and self-locking wing nuts (10) on RAM-Ball display base with ball and DU isolation assembly (7) bottom plate.

j. Insert RAM-Ball display base with ball into RAM-Ball socket arm while supporting DU isolation assembly.

k. Adjust viewing angle and tighten RAM-Ball knob.

l. Install remaining square neck bolt (8), spacer (9), safety lanyard (12) and self-locking wing nut (10) on RAM-Ball display base with ball and DU isolation assembly (7) bottom plate.

m. Install DU IAW Unit Maintenance Manual TM 11-7010-326-20&P, Chapter 2.

n. Secure W2 display cable and ground strap to DU isolation assembly bottom plate using tie-wraps.

o. Dress tie-wraps using diagonal wire cutters.

p. Perform Functional Check IAW paragraph J–6.1.

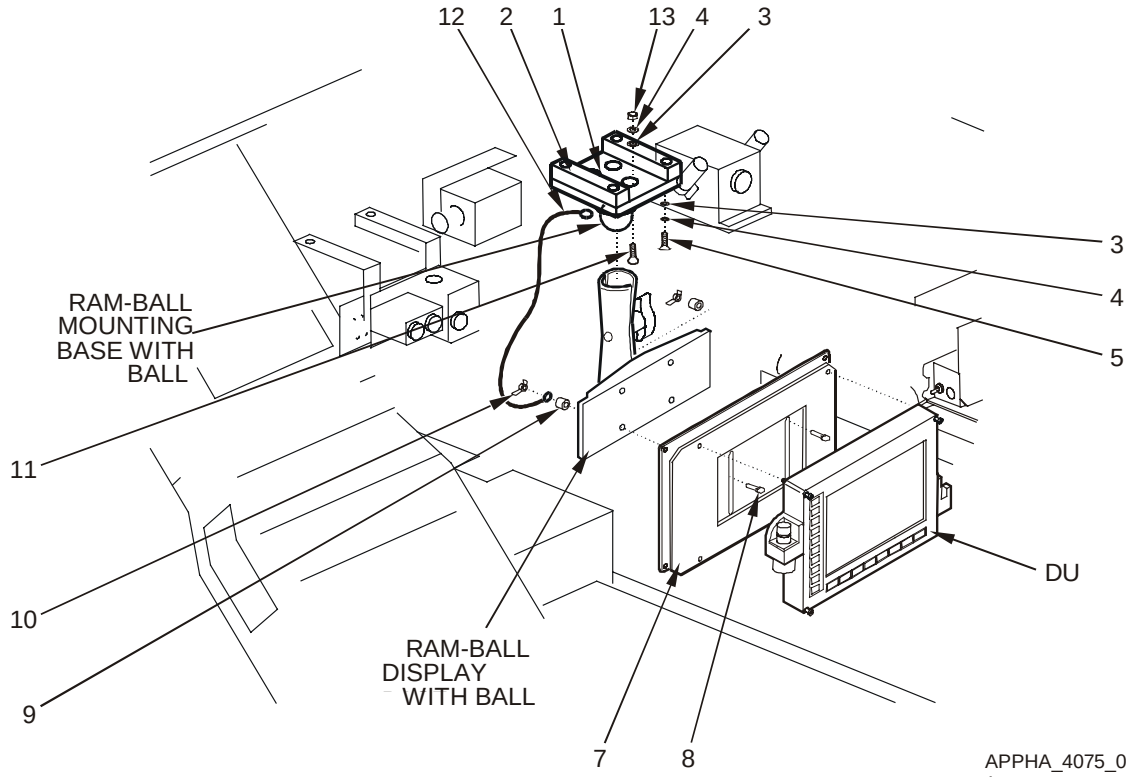

Figure J-7. Remove and Replace RAM-Ball Assembly

Key and Parts List for Figure J-7

ITEM NO.	NOMENCLATURE	CAGE CODE	PART NUMBER	NSN	QTY	SMR
1	(Display mounting plate) Plate, Mounting	80212	4250229		1	PAOZZ
2	Block, DU Mounting	80212	4250241		2	XBOZZ
3	Washer, Flat	96906	MS27183-10	5310-00-809-4058	7	PAOZZ
4	Washer, Lock	96906	MS35333-40	5310-00-550-1130	7	PAOZZ
5	Screw, Cap, Hex Head	80204	B1821AH025C100N	5305-01-389-7984	4	PAOZZ
6	Mount, RAM-Ball	0J198	889489-1		1	PAOZZ
7	(DU isolation assembly) Plate, Resilient Mount DU	0J198	872870-1		1	PAODD
8	Bolt, Square Neck	96906	MS35751-17	5306-00-889-2943	4	PAOZZ
9	Spacer, Aluminum	57177	10705AL315C		4	PAOZZ
10	Nut, Self-Locking, Wing	96906	MS51553-420	5310-01-384-2546	4	PAOZZ
11	Bolt, Flat Head	96906	MS35190-291	5306-00-042-6921	3	PAOZZ
12	(safety lanyard) Wire Rope Assembly 2’	39428	30645T11		1	PAOZZ
13	Nut, Plain, Hexagon	96906	MS35649-2252	5310-00-997-1888	3	PAOZZ
--	Assembly, Lock DU	0J198	872843-1		1	XBOOO
--	Bracket, Locking	0J198	861871-3		1	XBOZZ
--	Washer, Lock	96906	MS35338-42	5310-00-045-3299	2	PAOZZ
--	Screw	80205	MS35190-253	5305-00-059-4568	2	PAOZZ

J–6.11 REMOVE/REPLACE KEYBOARD UNIT (KU) STOWAGE BOX

Refer to Figure J-8.

J–6.11.1 REMOVE KEYBOARD UNIT (KU) STOWAGE BOX

a. Remove keyboard from stowage box, if stowed.

b. Loosen four KU stowage box captive screws (3) until the captive screws move freely using a No. 2 cross-tip screwdriver.

c. Remove KU stowage box (1) from PU.

J–6.11.2 REPLACE KEYBOARD UNIT (KU) STOWAGE BOX

a. Align four KU stowage box captive screws (3) with installation holes on PU.

b. Tighten four captive screws using a No. 2 cross-tip screwdriver.

c. Stow keyboard, if necessary.

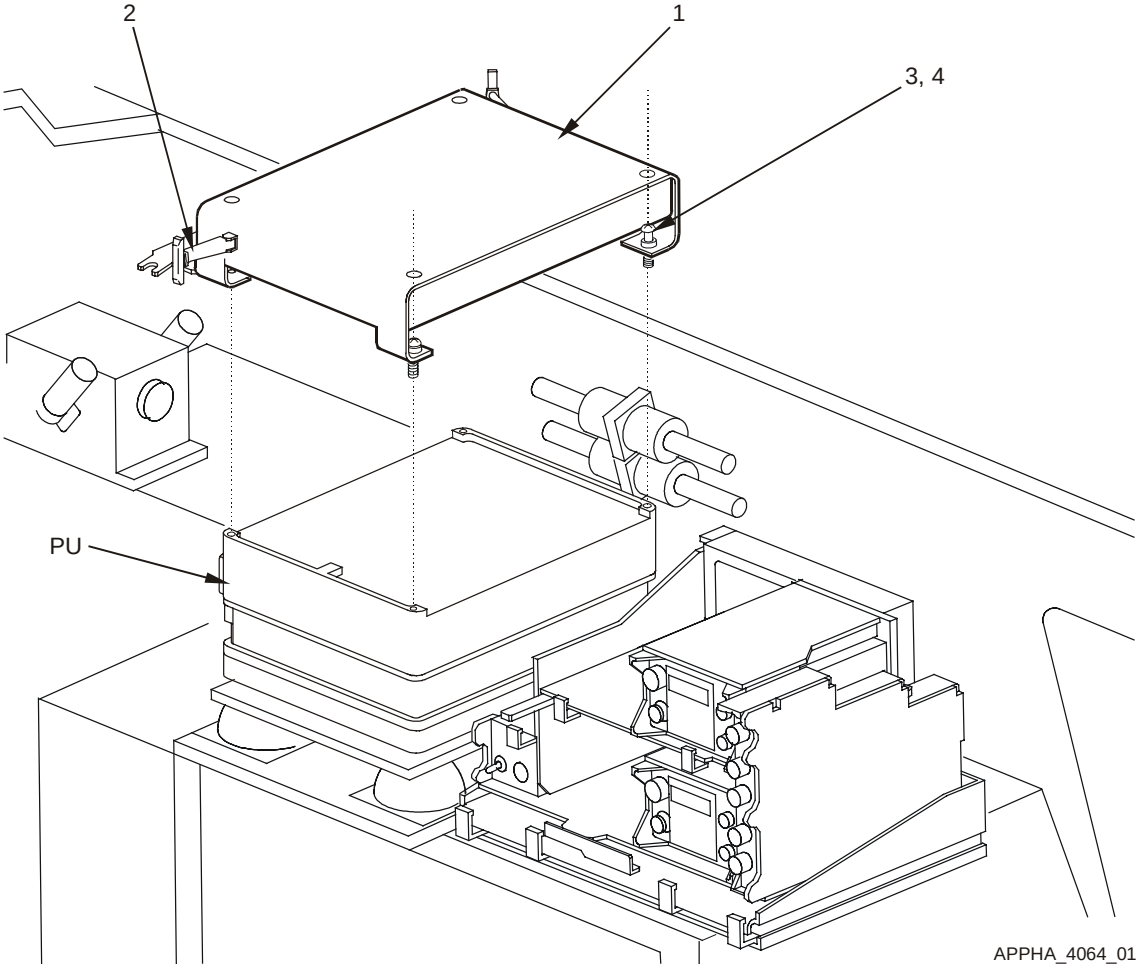

Figure J-8. Remove and Replace Keyboard Unit (KU) Stowage Box

Key and Parts List for Figure J-8

ITEM NO.	NOMENCLATURE	CAGE CODE	PART NUMBER	NSN	QTY	SMR
1	Box, KU Stowage	0J198	872845-1	2540-01-481-5744	1	PAODD
2	(KU stowage box door latch) Latch, Thumb	94222	37-20-071-20	5340-01-351-3340	2	PAOZZ
3	Screw, Captive Panel	57177	PH207-05SS1032		4	PAOZZ
4	Retainer, Panel Screw	57177	214-03SS10-32		4	PAOZZ
--	Case, Keyboard	0J198	872845-11		1	XBOOO
--	Bottom, Stowage Box	0J198	872845-12		1	XBOOO
--	Side Rail, Keybrd Box	0J198	872845-13		1	XBOOO
--	Side Rail, Keybrd Box	0J198	872845-14		1	XBOOO
--	Door, Keyboard Box	0J198	872845-15		1	XBOOO
--	Hinge, Keyboard Box	0J198	872845-16		1	XBOOO
--	Strip, Rubber	0J198	872845-17		1	XBOOO
--	Rivet, Solid, Csk	96906	MS20426AD-4-5	5320-00-117-6950	6	PAOZZ
--	Label, Keyboard Box	0J198	881323-1		1	PAOZZ
--	Screw, Pan Head	96906	MS35206-229	5305-00-984-4989	14	PAOZZ
--	Washer, Flat	96906	MS27183-5	5310-00-983-8483	16	PAOZZ
--	Washer, Lock	96906	MS35338-41	5310-00-045-4007	13	PAOZZ
--	Nut, Plain	96906	MS35649-262	5310-00-934-9747	3	PAOZZ
--	Rubber Edge Trim	39428	8507K16	5325-01-435-2840	9	PAOZZ
--	Adhesive	04963	SCOTCH-GRIP RUB	8040-00-664-4318	1	PAOZZ
--	Grip, Handle Assembly	0J198	861867-1		1	XBOOO
--	Grip, Handle	0J198	861869-1		1	XBOZZ
--	Screw, Machine	96906	MS35206-228	5305-00-984-4988	4	PAOZZ
--	Washer, Lock	96906	MS35338-41	5310-00-045-4007	4	PAOZZ
--	Tape, Shielding, Elect	39428	7648A34		1	XBOZZ

J–6.12 REMOVE/REPLACE KEYBOARD UNIT (KU) STOWAGE BOX DOOR LATCHES

Refer to Figure J-9.

J–6.12.1 REMOVE KEYBOARD UNIT (KU) STOWAGE BOX DOOR LATCHES

a. Pull rubber T-handles and unfasten KU stowage box door latches, if necessary.

b. Remove two pan head screws (1), lock washers (2) and flat washers (3) from each KU stowage box door latch (4) using a No. 2 cross-tip screwdriver.

c. Remove KU stowage box door latch (4).

J–6.12.2 REPLACE KEYBOARD UNIT (KU) STOWAGE BOX DOOR LATCHES

NOTE

The same KU stowage box door latch part is used for each side of the keyboard stowage box. There is a bumper on one side of the latch that should be positioned toward the side of the keyboard stowage box when fastened.

a. Align KU stowage box door latch mounting holes with mounting holes in KU stowage box.

b. Install and tighten two pan head screws (1), lock washers (2) and flat washers (3) for each KU stowage box door latch (4), using a No. 2 cross-tip screwdriver.

c. Pull rubber T-handles and fasten KU stowage box door latches.

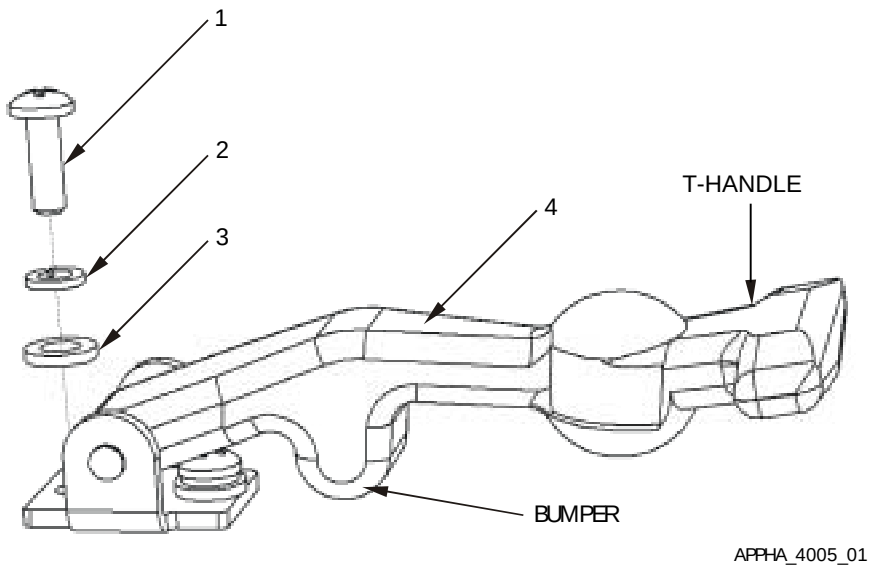

Figure J-9. Remove and Replace Keyboard Unit (KU) Stowage Box Door Latches

Key and Parts List for Figure J-9

ITEM NO.	NOMENCLATURE	CAGE CODE	PART NUMBER	NSN	QTY	SMR
1	Screw, Pan Head	96906	MS35206-229	5305-00-984-4989	14	PAOZZ
2	Washer, Lock	96906	MS35338-41	5310-00-045-4007	13	PAOZZ
3	Washer, Flat	96906	MS27183-5	5310-00-983-8483	16	PAOZZ
4	(KU stowage box door latch) Latch, Thumb	94222	37-20-071-20	5340-01-351-3340	2	PAOZZ

This page intentionally left blank.

APPENDIX K

SUPPLEMENTARY INFORMATION FOR

M998/M1026/M1038 HMMWV COMMON

TABLE OF CONTENTS

Page
K–1 GENERAL K–3
K–2 COMPONENT ITEM NUMBERS AND PART NUMBERS K–3
K–3 SYSTEM INTERFACES K–3
K–3.1 MECHANICAL K–3
K–3.2 CABLE INTERFACES K–4
K–4 COMPONENT LOCATION K–6
K–4.1 GENERAL LOCATION K–6
K–4.2 MOUNTING K–6
K–5 PLATFORM-UNIQUE TROUBLESHOOTING K–8
K–6 REMOVAL/REPLACEMENT IN THE PLATFORM K–8
K–6.1 FUNCTIONAL CHECK K–8
K–6.2 REMOVE/REPLACE W1 POWER CABLE K–9
K–6.3 REMOVE/REPLACE W2 DISPLAY CABLE K–10
K–6.4 REMOVE/REPLACE W3 SERIAL INTERFACE ADAPTER DEVICE (SIAD) K–12
K–6.5 REMOVE/REPLACE W3P PLGR CABLE K–13
K–6.6 REMOVE/REPLACE W3N INC CABLE K–14
K–6.7 REMOVE/REPLACE PU ISOLATION ASSEMBLY K–17
K–6.8 REMOVE/REPLACE DU ISOLATION ASSEMBLY K–20
K–6.9 REMOVE/REPLACE RAM-BALL ASSEMBLY K–23
K–6.10 REMOVE/REPLACE PU CONNECTOR GUARD K–26
K–6.11 REMOVE/REPLACE AMPLIFIER AND FASTENER GUARD K–27

LIST OF ILLUSTRATIONS

Page
Figure K-1. Equipment Interface Block Diagram K–5
Figure K-2. Relative Component Locations K–6
Figure K-3. Top-Down View of Integrated Rack Mounted Components K–7
Figure K-4. Cable Run K–16
Figure K-5. Remove and Replace PU Isolation Assembly K–19
Figure K-6. Remove and Replace DU Isolation Assembly K–22
Figure K-7. Remove and Replace RAM-Ball Assembly K–25
Figure K-8. Remove and Replace PU Connector Guard K–26
Figure K-9. Remove and Replace Amplifier and Fastener Guard K–28

K–1 GENERAL

This appendix describes the interfaces between the FBCB2 equipment and the M998/M1026/M1038 HMMWV with integrated rack (rack). This appendix also identifies the component parts of the M998/M1026/M1038 HMMWV platform installation kit and details the removal and replacement procedures particular to the M998/M1026/M1038 HMMWV vehicles with integrated racks.

In this appendix, also, the Avenger Support Vehicle is included as a HMMWV variant. The only difference between the HMMWV Common and the HMMWV Support Vehicle is the configuration of the W3 (SAID) Cable. In the HMMWV Support Vehicle the W3 (SAID) Cable P/N is 8881331-2 rather than a 8881331-1 Cable. This configuration permits the FBCB2 equipment to receive position location data from the EPLRS. Figure K-1. Figure K-2, Paragraph K-1, Paragraph K-3.2, and Paragraph K-6.4 are the only portions of this document that are affected.

K–2 COMPONENT ITEM NUMBERS AND PART NUMBERS

Key and Parts List tables contained in the Removal and Replacement section of this Appendix serve a dual purpose. Use the Item Numbers in the Key to identify components and attaching hardware shown in the Figures illustrating the tasks. The nomenclature and part number for the hardware and equipment mounting components of the installation kit also are keyed to the Item Numbers in the tables. Additional parts ordering information, such as Contractor and Government Entity code (CAGE); National Stock Number (NSN); quantity; and Source, Maintenance, and Recoverability (SMR) codes, are provided. The Key and Parts List tables follow the task illustrations.

K–3 SYSTEM INTERFACES

K–3.1 MECHANICAL

The mechanical hardware-to-hardware interfaces include:

a. Cables

b. Processor Unit (PU)

c. Display Unit (DU)

d. Keyboard Unit (KU)

K–3.2 CABLE INTERFACES

Figure K-1 illustrates a block diagram of the interfaces between FBCB2 equipment and the M998/M1026/M1038 HMMWV (Platform). Figure K-1 also illustrates the signal and control interfaces along with the terminal connector labels (e.g., P1, P2). The purpose of each cable is listed below:

Cable Name	Purpose
W1–Cable	Supplies vehicle power to the AN/UYK-128(V) computer and its subassemblies.
W2–Cable	Supplies power and signals to the Display Unit (DU) and Keyboard Unit (KU). Returns Man Machine Interface (MMI) information from the KU to the Processor Unit (PU).
W3–Cable	The Serial Interface Adapter Device (SIAD) is a conduit assembly that breaks out each of the serial interface ports to a connector.
W3P–Cable	Collects position and time information from the PLGR.
W3EP–Cable	Collects position location information from the EPLRS.
W3N–Cable	Provides duplex communication between the PU, Internet Controller (INC) and radios.
W4–Cable	Audio cable (This cable is not used in this platform).
W5–Cable	The Expansion Interface Adapter Device (EIAD) is connected to the Universal Serial Bus (USB) connector only when this vehicle is to be used in a Tactical Operations Center (TOC) setup. When used in this configuration, it is connected between the PU J5 connector and local router.
Ground Strap	Provides safety ground for the PU.
Ground Strap	Provides safety ground for the DU.

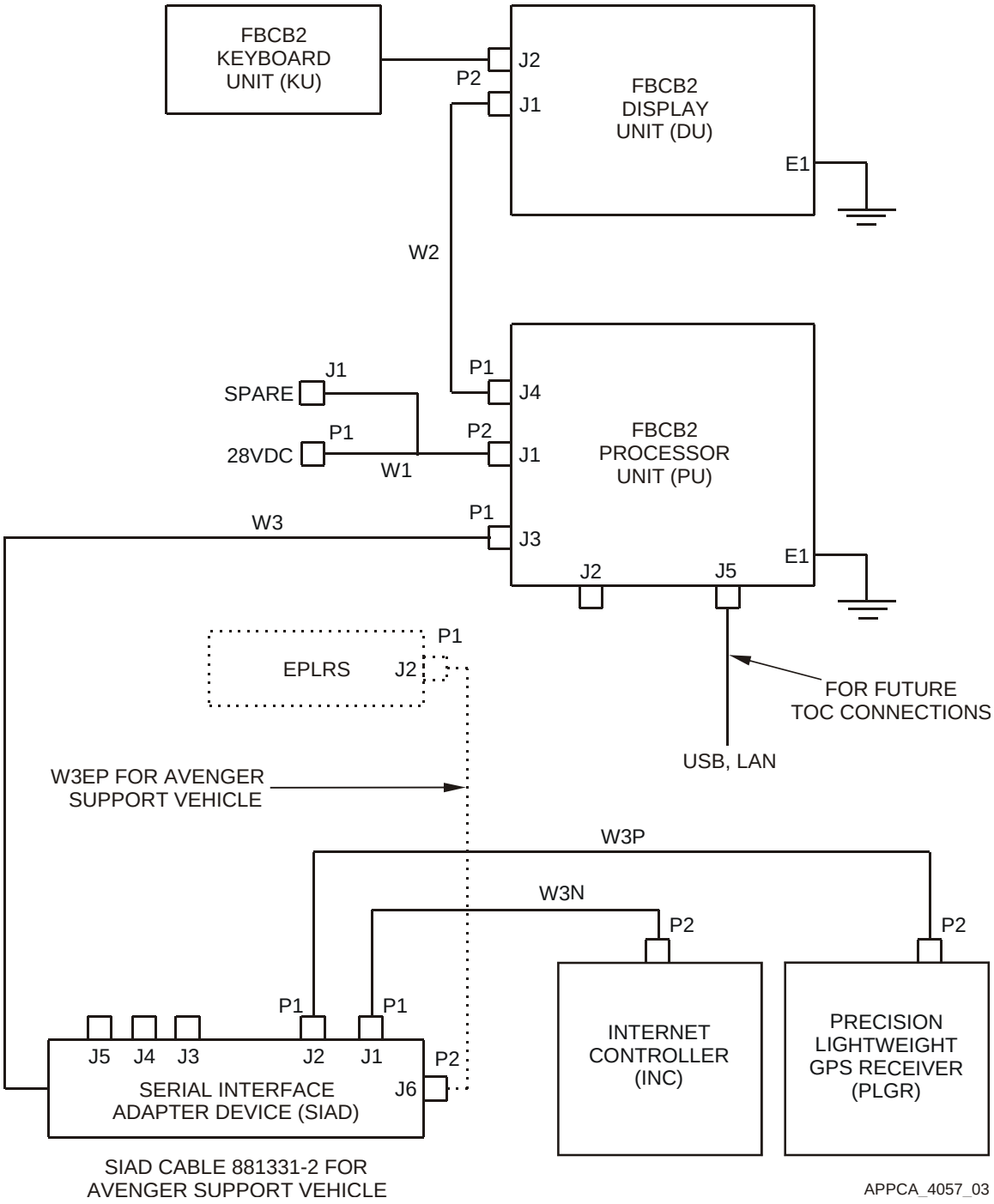

Figure K-1. Equipment Interface Block Diagram

K–4 COMPONENT LOCATION

K–4.1 GENERAL LOCATION

Figure K-2 shows the relative locations of the FBCB2 computer equipment and mounting components in the cab of the M998/M1026/M1038 HMMWV vehicles.

K–4.2 MOUNTING

The integrated rack containing most of the FBCB2 computer equipment is located between the driver and passenger, with the forward part of the rack against the dashboard. AN/UYK-128(V) equipment and the SINCGARS share this common rack. Refer to Figure K-3 for a Top-Down view to help define the location and mounting methodology.

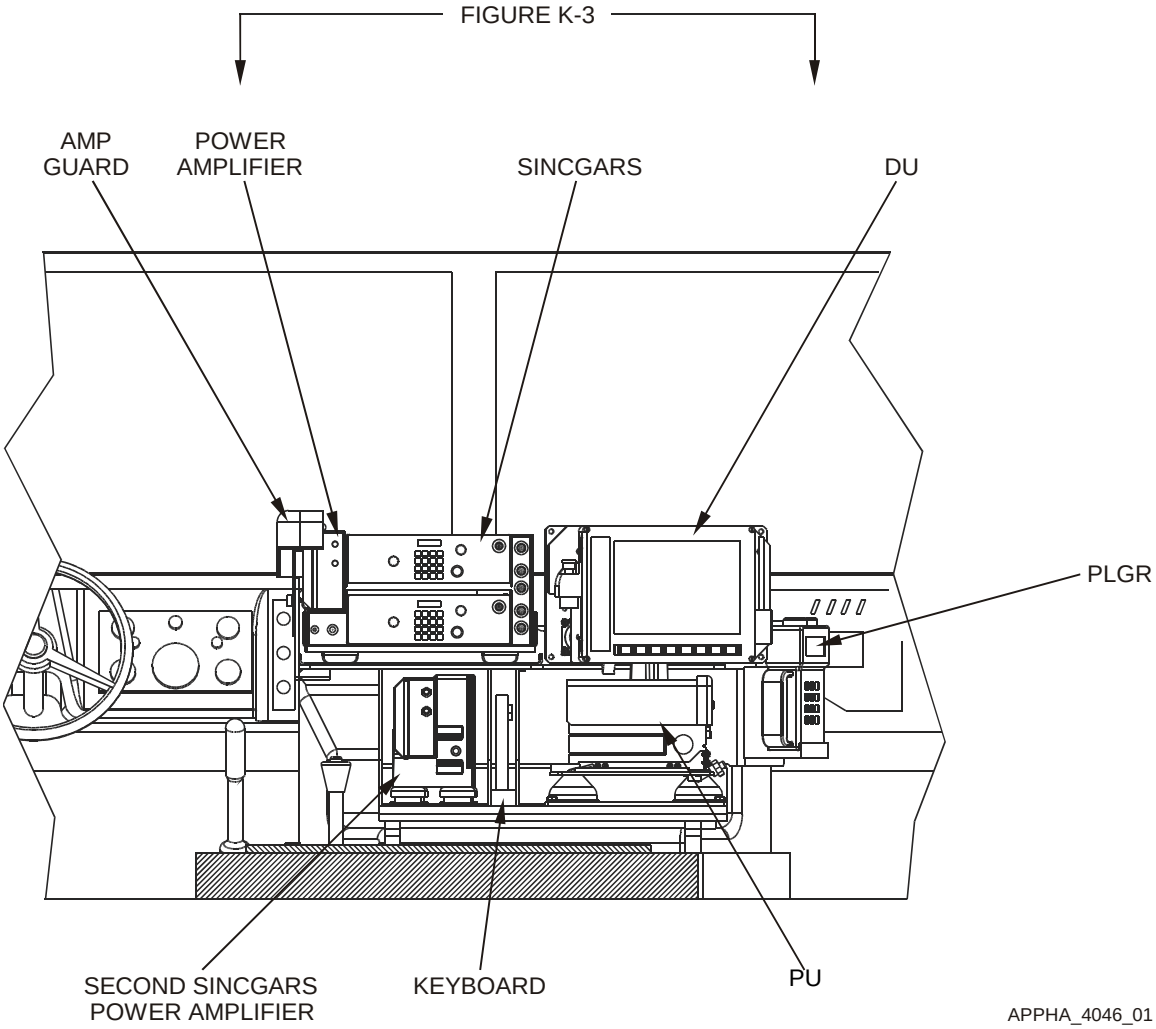

Figure K-2. Relative Component Locations

K–4.2.1 INTEGRATED RACK MOUNTING

Figure K-3 illustrates a top-down view of the FBCB2 components mounted in the Integrated Rack.

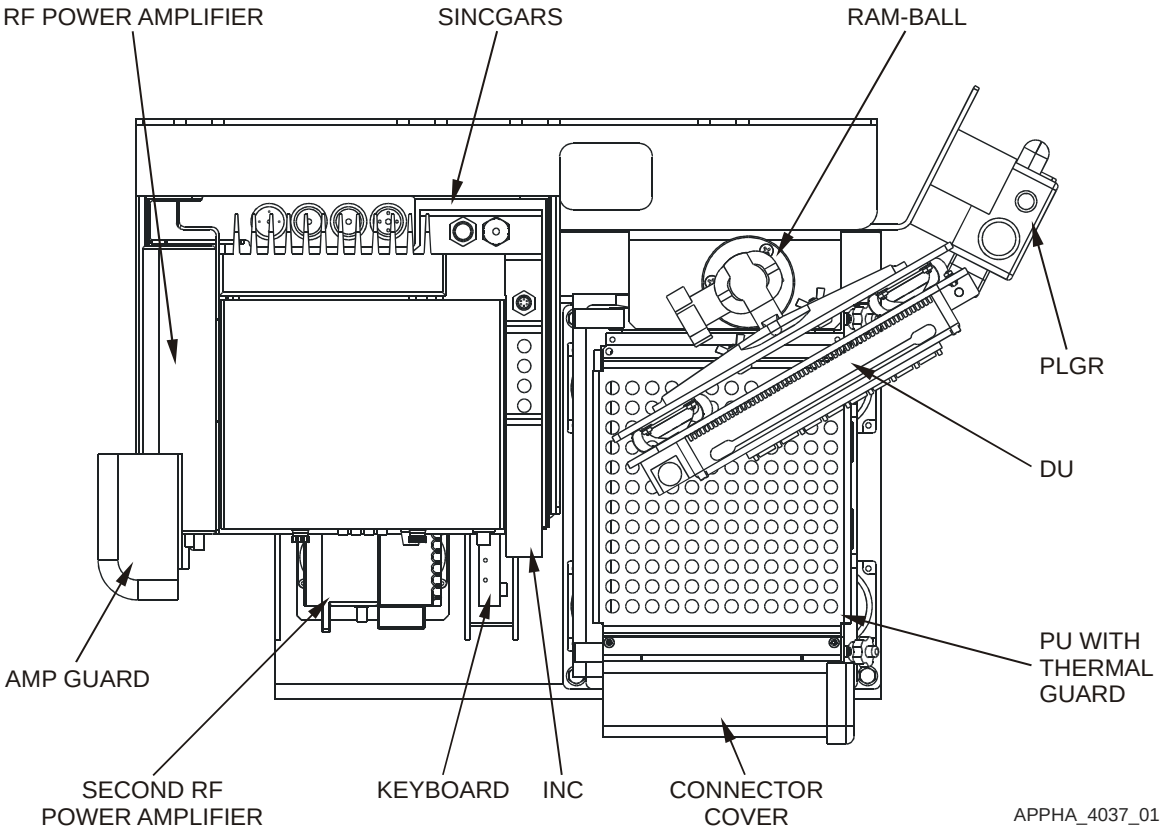

Figure K-3. Top-Down View of Integrated Rack Mounted Components

K–5 PLATFORM-UNIQUE TROUBLESHOOTING

There are no unique troubleshooting procedures for this vehicle.

K–6 REMOVAL/REPLACEMENT IN THE PLATFORM

Most installations must be tailored to the platform. Cables and brackets are unique to the installation. Before a part or assembly is removed from a vehicle, fill out a “Maintenance Request” DA Form 2407. One copy of this completed form must remain with the vehicle and the remaining copies must be kept with the failed component. To prove the operability of the system after an item is replaced, perform the system Functional Check.

K–6.1 FUNCTIONAL CHECK

K–6.1.1 POWER UP

Power up and initialize all interface equipment and the AN/UYK-128(V) In Accordance With (IAW) the Operator’s Manual TM 11-7010-326-10, or Pocket Guide TB 11-7010-326-10.

K–6.1.2 VERIFICATION

NOTE

Observe that the Display Unit PWR, DISP and CPU green LED lights are lit.

a. Observe that the PLGR synchronizes with PU, indicated by the PLGR dialog box showing green.

b. Observe that the Router synchronizes with the PU, indicated by the Router dialog box showing green.

c. At the Session Manager screen, select OPS button to display the OPS screen.

d. Verify the GPS status is either green or amber on the Classification/Status Bar.

e. Verify the Communications status is either green or amber on the Classification/Status Bar.

K–6.1.3 POWER DOWN

Power down all interface equipment and the AN/UYK-128(V) IAW the Operator’s Manual TM 11-7010-326-10, or Pocket Guide TB 11-7010-326-10.

K–6.2 REMOVE/REPLACE W1 POWER CABLE

Refer to Figure K-4.

K–6.2.1 REMOVE W1 POWER CABLE

WARNING

Before conducting maintenance involving the removal and replacement of system components, ensure that all power to the FBCB2 system is off (including power from the vehicle). Failure to comply with warning may result in equipment damage or injury to personnel.

a. Power down AN/UYK-128(V) system IAW Operator's Manual TM 11-7010-326-10, or Pocket Guide TB 11-7010-326-10.

b. Power down SINCGARS IAW TM 11-5820-890-10-8.

c. Unlatch and slide the Vehicle Amplifier-Adapter (VAA) AM-7239/VRC forward to access W1-P1 power cable connector.

d. Disconnect W1-P1 cable connector from the SINCGARS Mounting Base (MB) (MT-6352/VRC) A4-J2 connector.

e. Open PU connector guard (captive thumbscrew).

f. Disconnect W1-P2 cable connector from PU J1 connector.

g. Install protective cap on PU J1 connector.

h. Close PU connector guard.

NOTE

Note cable routing and tie-wrap locations before removing cable or tie-wraps.

i. Remove tie-wraps securing W1 cable using diagonal wire cutters.

j. Remove W1 power cable (1).

K–6.2.2 REPLACE W1 POWER CABLE

a. Route W1 power cable (1).

b. Open PU connector guard (captive thumbscrew).

c. Remove protective cap from PU J1 connector.

d. Connect W1-P2 cable connector to PU J1 connector.

e. Close PU connector guard.

f. Connect W1-P1 cable connector to SINCGARS Mounting Base (MB) (MT-6352/VRC) A4-J2 connector.

g. Secure VAA, AM-7239/VRC in original mounting position on integrated rack.

h. Secure W1 cable using tie-wraps, as applicable.

i. Dress tie-wraps using diagonal wire cutters.

j. Perform Functional Check IAW paragraph K–6.1.

K–6.3 REMOVE/REPLACE W2 DISPLAY CABLE

Refer to Figure K-4.

K–6.3.1 REMOVE W2 DISPLAY CABLE

WARNING

Before conducting maintenance involving the removal and replacement of system components, ensure that all power to the FBCB2 system is off (including power from the vehicle). Failure to comply with warning may result in equipment damage or injury to personnel.

a. Power down AN/UYK-128(V) system IAW Operator's Manual TM 11-7010-326-10, or Pocket Guide TB 11-7010-326-10.

b. Open PU connector guard (captive thumbscrew).

c. Disconnect W2-P1 cable connector from PU J4 connector.

d. Install protective cap on PU J4 connector.

e. Close PU connector guard.

f. Disconnect W2-P2 cable connector from display J1 connector.

g. Install protective cap on display J1 connector.

NOTE

Note cable routing and tie-wrap locations before removing cable or tie-wraps.

h. Remove tie-wraps from W2 cable and ground strap using diagonal wire cutters.

NOTE

The PU ground strap may be wrapped around the W2 Display cable. If necessary, remove the ground strap from PU E1 CHAS ground stud to unwrap the ground strap from the W2 cable.

i. Disconnect ground strap from PU E1 CHAS ground stud, if necessary.

j. Remove W2 display cable (5).

K–6.3.2 REPLACE W2 DISPLAY CABLE

a. Route W2 display cable (5).

b. Remove protective cap from display J1 connector.

c. Connect W2-P2 cable connector to display J1 connector.

d. Open PU connector guard (captive thumbscrew).

e. Remove protective cap from PU J4 connector.

f. Connect W2-P1 cable connector to PU J4 connector.

g. Close PU connector guard.

NOTE

To take up slack, the ground strap may be wrapped around the W2 cable before connecting it to E1 CHAS ground stud.

h. Connect ground strap to PU E1 CHAS ground stud, if removed.

i. Secure W2 cable and ground strap to DU isolation assembly using tie-wraps.

j. Dress tie-wraps using diagonal wire cutters.

k. Perform Functional Check IAW paragraph K–6.1.

K–6.4 REMOVE/REPLACE W3 SERIAL INTERFACE ADAPTER DEVICE (SIAD)

Refer to Figure K-4.

K–6.4.1 REMOVE W3 SERIAL INTERFACE ADAPTER DEVICE (SIAD)

WARNING

Before conducting maintenance involving the removal and replacement of system components, ensure that all power to the FBCB2 system is off (including power from the vehicle). Failure to comply with warning may result in equipment damage or injury to personnel.

a. Power down AN/UYK-128(V) system IAW Operator's Manual TM 11-7010-326-10, or Pocket Guide TB 11-7010-326-10.

b. Disconnect W3N-P1 cable connector from W3 SIAD J1 connector.

c. Disconnect W3P-P1 cable connector from W3 SIAD J2 connector.

d. Disconnect W3EP-P2 EPLRS cable connector from W3 SIAD J6 connector, if necessary.

e. Open PU connector guard (captive thumbscrew).

f. Disconnect W3 SIAD P1 connector from PU J3 connector.

g. Install protective cap on PU J3 connector.

h. Close PU connector guard.

NOTE

Note cable routing and tie-wrap locations before removing cable or tie-wraps.

i. Remove tie-wraps securing W3 SIAD using diagonal wire cutters.

j. Remove W3 SIAD (3).

K–6.4.2 REPLACE W3 SERIAL INTERFACE ADAPTER DEVICE (SIAD)

a. Route W3 SIAD (3) into original position.

b. Open PU connector guard (captive thumbscrew).

c. Remove protective cap from PU J3 connector.

d. Connect W3 SIAD-P1 cable connector to PU J3 connector.

e. Close PU connector guard.

f. Connect W3EP-P2 EPLRS cable connector to W3 SIAD J6 connector, if necessary.

g. Connect W3P-P1 cable connector to W3 SIAD J2 connector.

h. Connect W3N-P1 cable connector to W3 SIAD J1 connector.

i. Secure W3 SIAD using tie-wraps.

j. Dress tie-wraps using diagonal wire cutters.

k. Perform Functional Check IAW paragraph K–6.1.

K–6.5 REMOVE/REPLACE W3P PLGR CABLE

Refer to Figure K-4.

K–6.5.1 REMOVE W3P PLGR CABLE

WARNING

Before conducting maintenance involving the removal and replacement of system components, ensure that all power to the FBCB2 system is off (including power from the vehicle). Failure to comply with warning may result in equipment damage or injury to personnel.

a. Power down AN/UYK-128(V) system IAW Operator's Manual TM 11-7010-326-10, or Pocket Guide TB 11-7010-326-10.

b. Disconnect W3P-P1 cable connector from W3 SIAD J2 connector.

c. Remove PLGR from mount.

d. Disconnect W3P-P2 cable connector from PLGR J2 connector using offset flat screwdriver.

NOTE

Note cable routing and tie-wrap locations before removing cable or tie-wraps.

e. Remove tie-wraps securing W3P cable using diagonal wire cutters.

f. Remove W3P cable (2).

K–6.5.2 REPLACE W3P PLGR CABLE

a. Route W3P cable (2).

b. Connect W3P-P2 cable connector to PLGR J2 connector using offset flat screwdriver.

c. Install PLGR in mount.

d. Connect W3P-P1 cable connector to W3 SIAD J2 connector.

e. Secure W3P cable using tie-wraps.

f. Dress tie-wraps using diagonal wire cutters.

g. Perform Functional Check IAW paragraph K–6.1.

K–6.6 REMOVE/REPLACE W3EP EPLRS CABLE

Refer To Figure K-4.

K–6.6.1 REMOVE W3EP EPLRS CABLE

This cable, W3EP, is only used in the Avenger Support Vehicle, which uses the 881331-2 SIAD Cable.

WARNING

Before conducting maintenance involving the removal and replacement of system components, ensure that all power to the FBCB2 system is off (including power from the vehicle). Failure to comply with warning may result in equipment damage or injury to personnel.

a. Power down AN/UYK-128(V) system IAW Operator's Manual TM 11-7010-326-10, or Pocket Guide TB 11-7010-326-10.

b. Disconnect W3EP-P2 cable connector from W3 SIAD J6 connector.

c. Disconnect W3EP-P1 cable connector from EPLRS J2 connector.

NOTE

Note cable routing and tie-wrap locations before removing cable or tie-wraps.

d. Remove tie-wraps securing W3EP cable using diagonal wire cutters.

e. Remove W3EP cable (?).

K–6.6.2 REPLACE W3EP EPLRS CABLE

a. Route W3EP cable (?).

b. Connect W3EP-P1 cable connector to EPLRS J6 connector.

c. Connect W3EP-P2 cable connector to W3 SIAD J6 connector.

d. Secure W3EP cable using tie-wraps.

e. Dress tie-wraps using diagonal wire cutters.

f. Perform Functional Check IAW paragraph K–6.1.

K–6.7 REMOVE/REPLACE W3N INC CABLE

Refer to Figure K-4.

K–6.7.1 REMOVE W3N INC CABLE

WARNING

Before conducting maintenance involving the removal and replacement of system components, ensure that all power to the FBCB2 system is off (including power from the vehicle). Failure to comply with warning may result in equipment damage or injury to personnel.

a. Power down AN/UYK-128(V) system IAW Operator's Manual TM 11-7010-326-10, or Pocket Guide TB 11-7010-326-10.

b. Disconnect W3N-P1 cable connector from W3 SIAD J1 connector.

c. Disconnect W3N-P2 cable connector from SINCGARS INC J6 connector.

NOTE

Note cable routing and tie-wrap locations before removing cable or tie-wraps.

d. Remove tie-wraps securing W3N cable using diagonal cutters.

e. Remove W3N cable (4).

K–6.7.2 REPLACE W3N INC CABLE

a. Route W3N cable (4).

b. Connect W3N-P2 cable connector to SINCGARS INC J6 connector.

c. Connect W3N-P1 cable connector to W3 SIAD J1 connector.

d. Secure W3N cable using tie-wraps.

e. Dress tie-wraps using diagonal wire cutters.

f. Perform Functional Check IAW paragraph K–6.1.

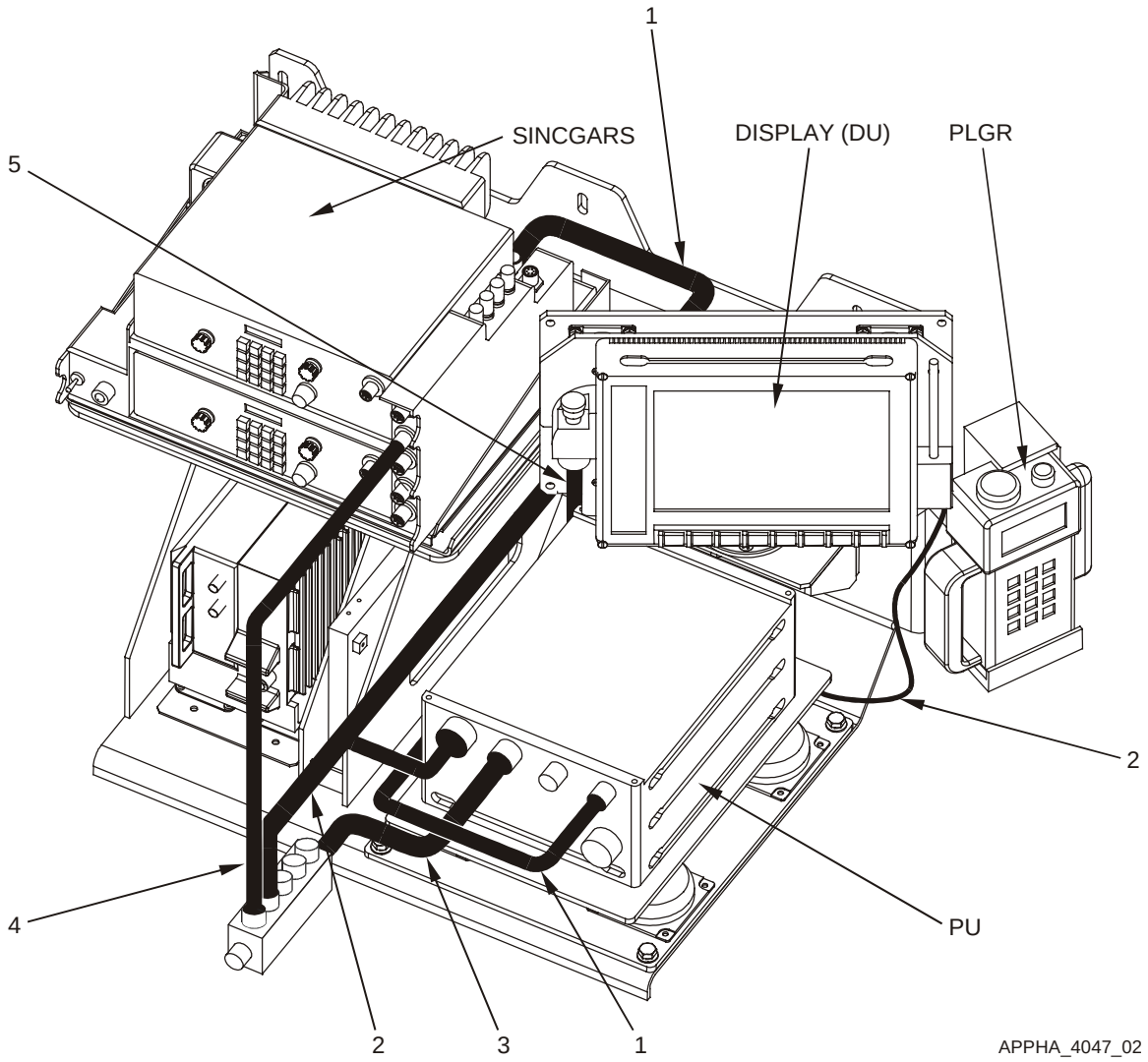

Figure K-4. Cable Run

Key and Parts List for Figure K-4

ITEM NO.	NOMENCLATURE	CAGE CODE	PART NUMBER	NSN	QTY	SMR
1	Cable Assembly W1	0J198	866003-3	5995-01-478-4908	1	PAODD
2	Cable Assembly W3P	0J198	881335-1	5995-01-478-4891	1	PAODD
3	Adapter Assy SIAD W3	0J198	881331-1 & -2	4920-01-478-3722	1	PAODD
4	Cable Assembly W3N	0J198	881336-1	5995-01-478-4913	1	PAODD
5	Cable Assembly W2	0J198	881327-1	5995-01-478-4876	1	PAODD
6	Cable Assembly W3EP	0J198	889514-1	5995-01-478-	1	PAODD
--	Strap, Tie Down, Elect	39428	7130K31		30	PAOZZ
--	Holder, Cable, Tie 2w	39428	7566K27		30	PAOZZ

K–6.8 REMOVE/REPLACE PU ISOLATION ASSEMBLY

Refer to Figure K-5.

NOTE

Ground straps are attached to components at one end (PU and DU) and a frame ground at the other end. Regardless of where the ground strap terminates, it is usually a burnished (void of paint) area. If the ground strap is removed from a burnished area, make sure to return it to the same burnished area. Where applicable, always connect the ground strap first when assembling, and disconnect the ground strap last when disassembling.

K–6.8.1 REMOVE PU ISOLATION ASSEMBLY

WARNING

Before conducting maintenance involving the removal and replacement of system components, ensure that all power to the FBCB2 system is off (including power from the vehicle). Failure to comply with warning may result in equipment damage or injury to personnel.

a. Power down AN/UYK-128(V) system IAW Operator's Manual TM 11-7010-326-10, or Pocket Guide TB 11-7010-326-10.

NOTE

Do not remove the Removable Hard Disk Drive Cartridge (RHDDC), locking bracket, or thermal guard (if installed) from PU.

b. Remove PU IAW Unit Maintenance Manual TM 11-7010-326-20&P, Chapter 2.

c. Remove one hex head screw (2), lock washer (3), flat washer (4) and ground strap from PU isolation assembly (1) bottom plate using 7/16" socket with ratchet and 3" extension.

d. Remove remaining three hex head screws (2), lock washers (3) and flat washers (4) from PU isolation assembly (1) bottom plate using 7/16" socket with ratchet and 3" extension.

e. Remove PU isolation assembly (1) from rack.

K–6.8.2 REPLACE PU ISOLATION ASSEMBLY

a. Align four PU isolation assembly (1) bottom plate holes with installation holds in mounting rack.

NOTE

To ensure positive ground, PU ground strap must make direct contact with bare metal. Ensure PU ground strap is installed in its original location at the PU isolation assembly bottom plate mounting hole. Slip the lock washer, flat washer and then the ground strap on the mounting screw before installing and tightening screw.

b. Install one hex head screw (2), lock washer (3), flat washer (4) and ground strap on PU isolation assembly (1) bottom plate using 7/16” socket with ratchet and 3” extension.

c. Install remaining three hex head screws (2), lock washers (3) and flat washers (4) using 7/16” socket with ratchet and 3” extension.

d. Install PU IAW Unit Maintenance Manual TM 11-7010-326-20&P, Chapter 2.

e. Perform Functional Check IAW paragraph K–6.1.

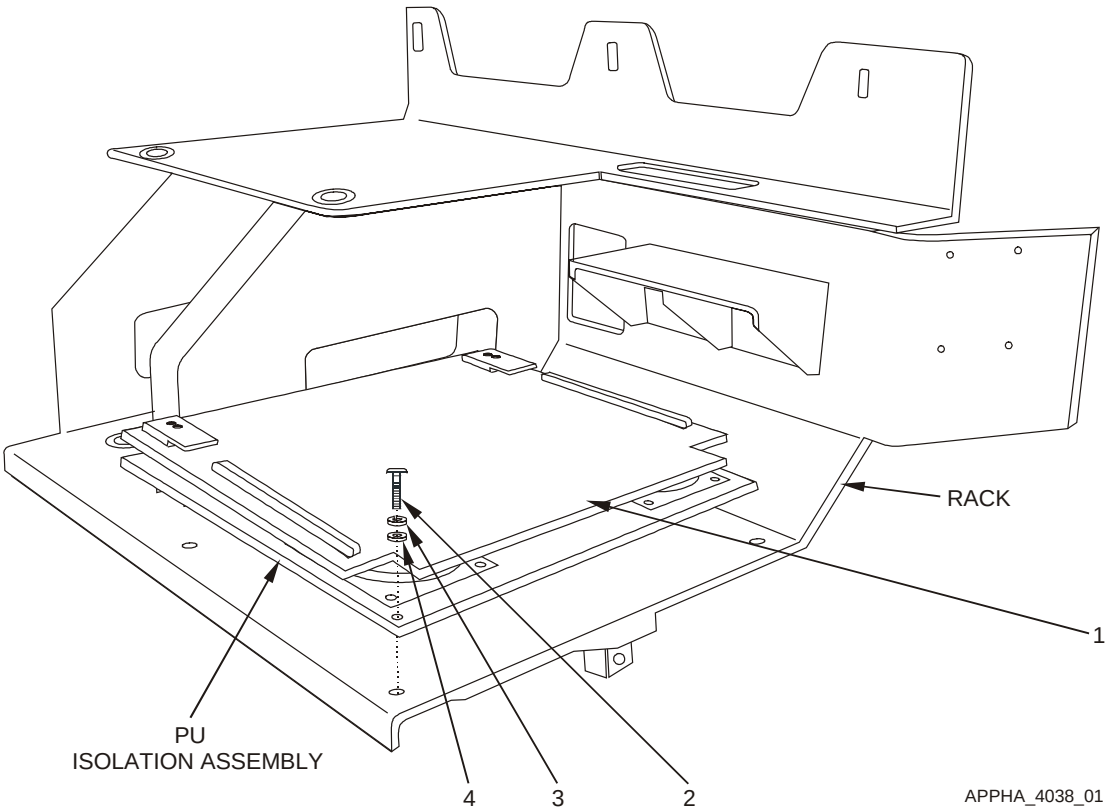

Figure K-5. Remove and Replace PU Isolation Assembly

Key and Parts List for Figure K-5

ITEM NO.	NOMENCLATURE	CAGE CODE	PART NUMBER	NSN	QTY	SMR
1	(PU isolation assembly) Plate, Resilient Mount PU	0J198	872826-2	5340-01-481-5742	1	PAODD
2	Screw, Cap, Hexagon	80204	B1821AH025C100N	5305-01-389-7984	4	PAOZZ
3	Washer, Lock	96906	MS35338-44	5310-00-582-5965	4	PAOZZ
4	Washer, Flat	96906	MS27183-10	5310-00-809-4058	4	PAOZZ
--	Assembly, PU Lock	0J198	861865-1		1	XBOOO
--	Bracket, Locking	0J198	861871-1		1	XBOZZ
--	Screw	80205	MS35190-253	5305-00-05-4568	2	PAOZZ
--	Guard, Fastener	0J198	881328-1		1	PAOZZ
--	Thermal Guard Assy (if installed)	0J198	872860-1		1	XBOOO
--	Thermal Guard	0J198	872860-11		1	PAOZZ
--	Screw, Machine	96906	MS51958-63	5305-00-059-3659	4	PAOZZ
--	Grommet	63590	BG2903	5325-01-291-3383	4	PAOZZ
--	Retainer, Bolt	032U6	75-4119		4	PAOZZ

K–6.9 REMOVE/REPLACE DU ISOLATION ASSEMBLY

Refer to Figure K-6.

NOTE

Ground straps are attached to components at one end (PU and DU) and a frame ground at the other end. Regardless of where the ground strap terminates, it is usually a burnished (void of paint) area. If the ground strap is removed from a burnished area, make sure to return it to the same burnished area. Where applicable, always connect the ground strap first when assembling, and disconnect the ground strap last when disassembling.

K–6.9.1 REMOVE DU ISOLATION ASSEMBLY

WARNING

Before conducting maintenance involving the removal and replacement of system components, ensure that all power to the FBCB2 system is off (including power from the vehicle). Failure to comply with warning may result in equipment damage or injury to personnel.

a. Power down AN/UYK-128(V) system IAW, Operator's Manual TM 11-7010-326-10, or Pocket Guide TB 11-7010-326-10.

b. Remove DU IAW Unit Maintenance Manual TM 11-7010-326-20&P, Chapter 2.

NOTE

Note cable routing and tie-wrap locations before removing cable or tie-wraps.

c. Remove tie-wraps securing W2 display cable and ground strap to DU isolation assembly using diagonal wire cutters.

d. Loosen RAM-Ball knob while supporting DU isolation assembly (1) until RAM-Ball display base with ball can be lifted free of RAM-Ball socket arm.

e. Remove four self-locking wing nuts (4), spacers (3) and square neck bolts (2) from RAM-Ball display base with ball and DU isolation assembly (1) bottom plate.

f. Remove DU isolation assembly (1) from RAM-Ball display base with ball.

K–6.9.2 REPLACE DU ISOLATION ASSEMBLY

a. Align four RAM-Ball display base with ball installation holes with slots in the DU isolation assembly (1) bottom plate.

b. Install four square neck bolts (2), spacers (3) and self-locking wing nuts (4) on RAM-Ball display base with ball and DU isolation assembly (1) bottom plate.

CAUTION

Ensure RAM-Ball is free of dirt and contaminants before reassembling. Failure to comply can result in slippage or excess wear of RAM-Ball assembly.

c. Inspect and clean RAM-Ball socket arm and display base with ball, as necessary, using clean lint-free wipes.

d. Insert RAM-Ball display base with ball into RAM-Ball socket arm.

e. Adjust viewing angle and tighten RAM-Ball knob.

f. Secure W2 display cable and ground strap to DU isolation assembly (1) bottom plate using tie-wraps.

g. Dress tie-wrap using diagonal wire cutters.

h. Install DU IAW Unit Maintenance Manual TM 11-7010-326-20&P, Chapter 2.

i. Perform Functional Check IAW paragraph K–6.1.

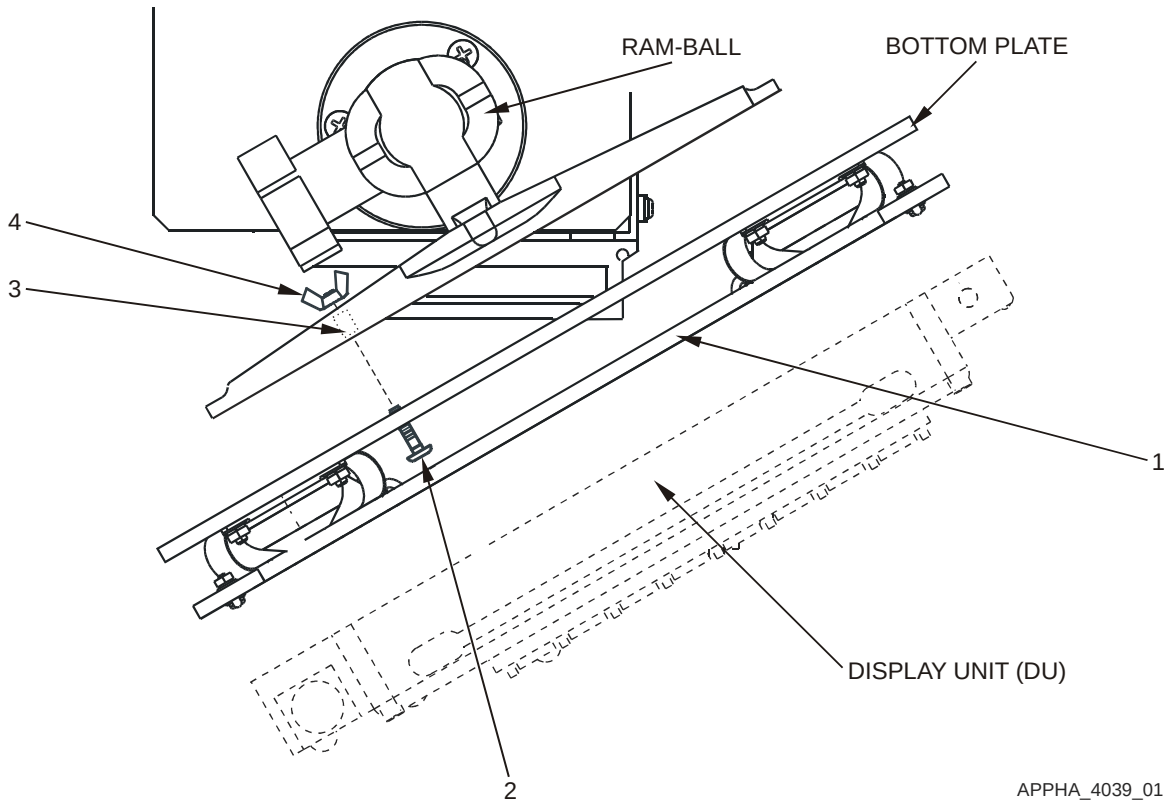

Figure K-6. Remove and Replace DU Isolation Assembly

Key and Parts List for Figure K-6

ITEM NO.	NOMENCLATURE	CAGE CODE	PART NUMBER	NSN	QTY	SMR
1	(DU isolation assembly) Plate, Resilient Mount DU	0J198	872870-1		1	PAODD
2	Bolt, Square Neck	96906	MS35751-17	5306-00-889-2943	4	PAOZZ
3	Spacer, Aluminum	57177	10705AL315C		4	PAOZZ
4	Nut, Self-Locking, Wing	96906	MS51553-420	5310-01-384-2546	4	PAOZZ
--	Strap, Tie Down, Elect	39428	7130K31		6	PAOZZ
--	Assembly, DU Lock	0J198	872843-1		1	XBOOO
--	Bracket, Locking	0J198	861871-3		1	XBOZZ
--	Washer, Lock	96906	MS35338-42	5310-00-045-3299	2	PAOZZ
--	Screw	80205	MS35190-253	5305-00-059-4568	2	PAOZZ

K–6.10 REMOVE/REPLACE RAM-BALL ASSEMBLY

Refer to Figure K-7.

NOTE

Ground straps are attached to components at one end (PU and DU) and a frame ground at the other end. Regardless of where the ground strap terminates, it is usually a burnished (void of paint) area. If the ground strap is removed from a burnished area, make sure to return it to the same burnished area. Where applicable, always connect the ground strap first when assembling, and disconnect the ground strap last when disassembling.

K–6.10.1 REMOVE RAM-BALL ASSEMBLY

WARNING

Before conducting maintenance involving the removal and replacement of system components, ensure that all power to the FBCB2 system is off (including power from the vehicle). Failure to comply with warning may result in equipment damage or injury to personnel.

a. Power down AN/UYK-128(V) system IAW Operator's Manual TM 11-7010-326-10, or Pocket Guide TB 11-7010-326-10.

b. Remove DU IAW Unit Maintenance Manual TM 11-7010-326-20&P, Chapter 2.

NOTE

Note cable routing and tie-wrap locations before removing cable or tie-wraps.

c. Remove tie-wraps securing W2 display cable and ground strap to DU isolation assembly using diagonal wire cutters.

d. Loosen RAM-Ball knob while supporting DU isolation assembly until RAM-Ball display base with ball can be lifted free of RAM-Ball socket arm

e. Remove four self-locking wing nuts (8), spacers (7) and square neck bolts (6) from Ram-Ball display base with ball and DU isolation assembly bottom plate.

f. Remove RAM-Ball socket arm from RAM-Ball mounting base with ball on display support bracket.

g. Loosen the PU self-locking front retainers.

h. Slide PU forward to gain access to RAM-Ball mounting base with ball mounting bolts and nuts.

i. Remove three machine bolts (5), flat washers (2), lock washers (3) and hex nuts (4) from RAM-Ball mounting base with ball and display support bracket using a 7/16" open end wrench and No. 3 cross-tip screwdriver.

K–6.10.2 REPLACE RAM-BALL ASSEMBLY

a. Align three holes in RAM-Ball mounting base with ball with display support bracket installation holes.

b. Install machine bolts (5), flat washers (2), lock washers (3) and hex nuts (4) using a 7/16” open end wrench and No. 3 cross-tip screwdriver.

c. Slide PU back into place and secure with self-locking front retainers.

CAUTION

Ensure RAM-Ball is free of dirt and contaminants before reassembling. Failure to comply can result in slippage or excess wear of RAM-Ball assembly.

d. Inspect and clean RAM-Ball socket are, display and mounting base with ball, as necessary, using clean lint-free wipes.

e. Install RAM-Ball socket arm on RAM-Ball mounting base with ball.

f. Align four holes in RAM-Ball display base with ball with slots in DU isolation assembly bottom plate.

g. Install four square neck bolts (6), spacers (7) and self-locking wing nuts (8) on Ram-Ball display base with ball and DU isolation assembly bottom plate.

h. Insert RAM-Ball display base with ball into RAM-Ball socket arm.

i. Adjust viewing angle and tighten RAM-Ball knob.

j. Install DU IAW Unit Maintenance Manual TM 11-7010-326-20&P, Chapter 2.

k. Secure W2 display cable and ground strap to DU isolation assembly using tie-wraps.

l. Dress tie-wraps using diagonal wire cutters.

m. Perform Functional Check IAW paragraph K–6.1.

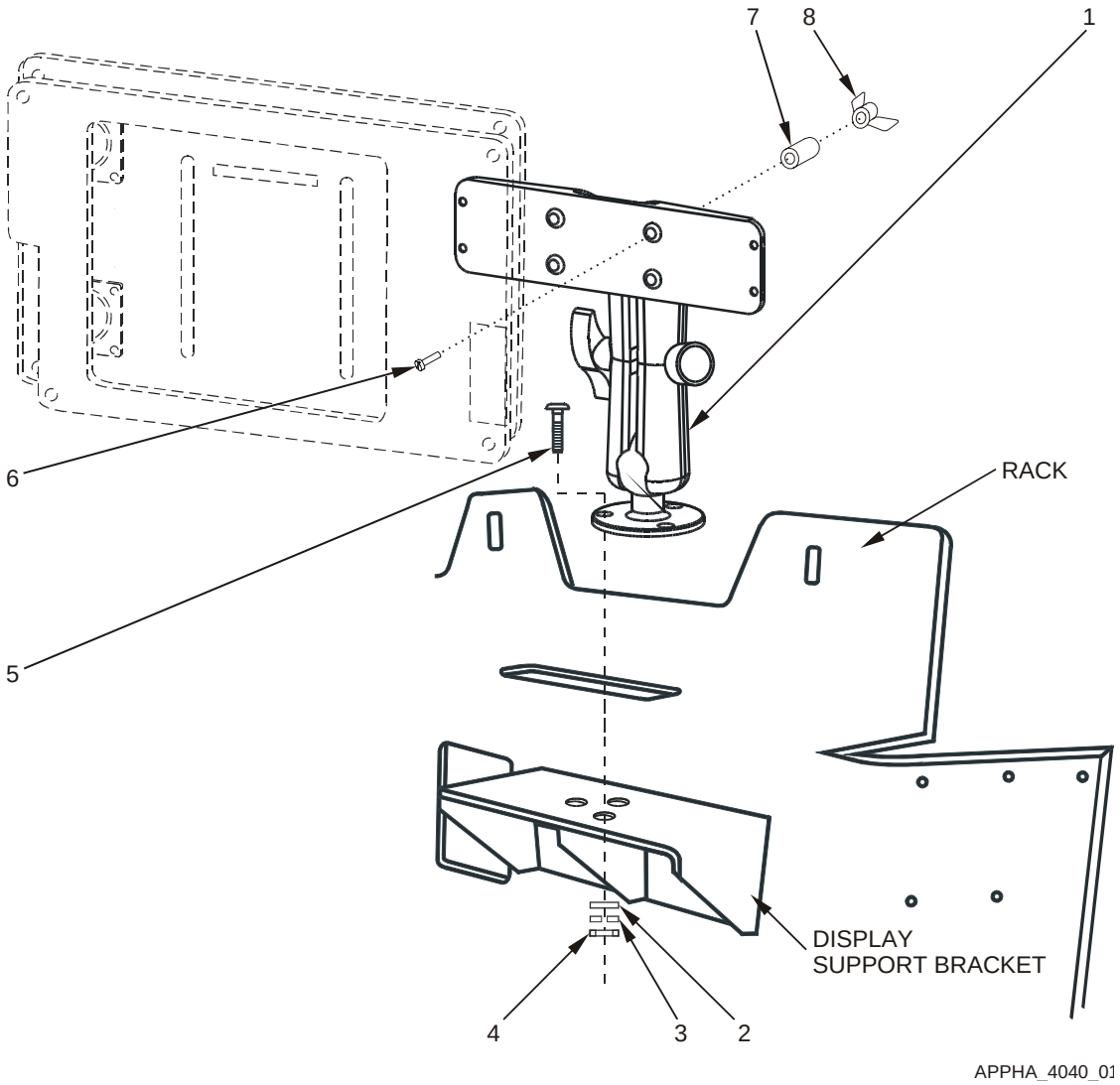

Figure K-7. Remove and Replace RAM-Ball Assembly

Key and Parts List for Figure K-7

ITEM NO.	NOMENCLATURE	CAGE CODE	PART NUMBER	NSN	QTY	SMR
1	(RAM-Ball assembly) Mount , RAM-Ball	0J198	889489-1		1	PAOZZ
2	Washer, Flat	96906	MS27183-10	5310-00-809-4058	3	PAOZZ
3	Washer, Lock	96906	MS35338-44	5310-00-582-5965	3	PAOZZ
4	Nut, Plain, Hexagon	96906	MS35649-2252	5310-00-997-1888	3	PAOZZ
5	Bolt, Machine	96906	MS35190-291	5306-00-042-6921	3	PAOZZ
6	Bolt, Square Neck	96906	MS35751-17	5306-00-889-2943	4	PAOZZ
7	Spacer, Aluminum	57177	10705AL315C		4	PAOZZ
8	Nut, Self-Locking, Wing	96906	MS51553-420	5310-01-384-2546	4	PAOZZ
--	Strap, Tie Down, Elect	39428	7130K31		6	PAOZZ

K–6.11 REMOVE/REPLACE PU CONNECTOR GUARD

Refer to Figure K-8.

K–6.11.1 REMOVE PU CONNECTOR GUARD

a. Loosen PU connector guard captive thumbscrew.

b. Loosen two PU connector guard captive screws until the captive screws move freely using a No. 2 cross-tip screwdriver.

c. Remove PU connector guard from PU.

K–6.11.2 REPLACE PU CONNECTOR GUARD

a. Align two PU connector guard mounting holes with PU mounting holes.

b. Tighten two captive screws using a No. 2 cross-tip screwdriver.

c. Tighten PU connector guard captive thumbscrew.

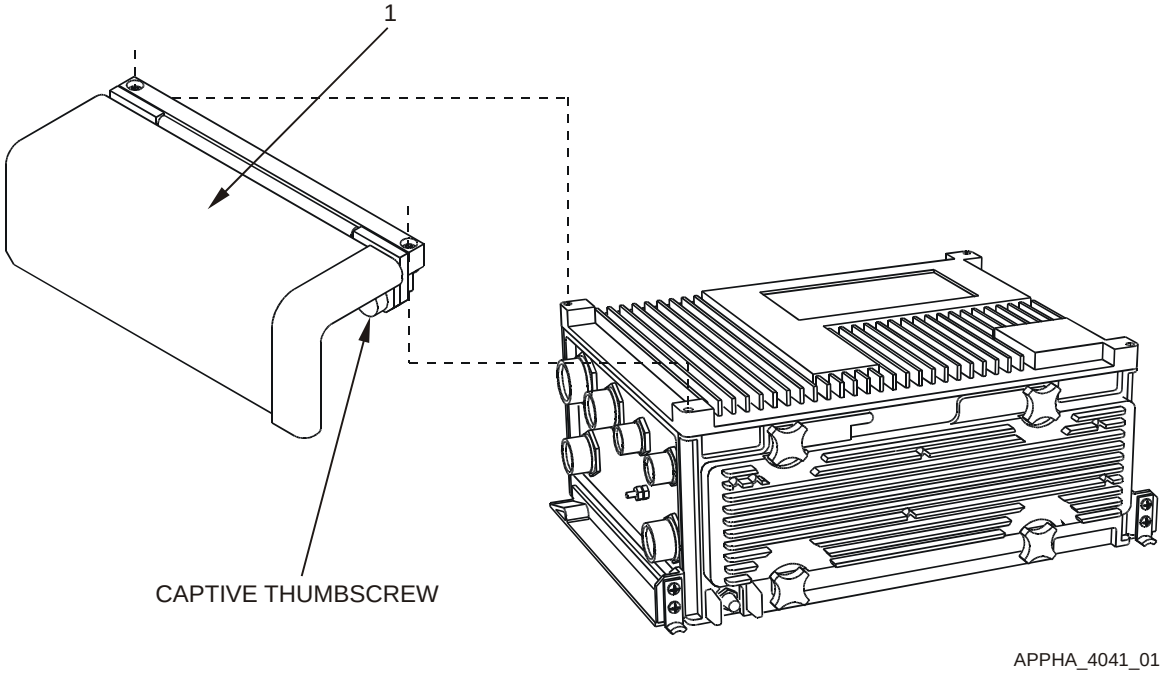

Figure K-8. Remove and Replace PU Connector Guard

Key and Parts List for Figure K-8

ITEM NO.	NOMENCLATURE	CAGE CODE	PART NUMBER	NSN	QTY	SMR
1	(DU connector guard) Cover, Connector DU	0J198	872861-1		1	PAOZZ

K–6.12 REMOVE/REPLACE AMPLIFIER AND FASTENER GUARD

Refer to Figure K-9.

K–6.12.1 REMOVE AMPLIFIER AND FASTENER GUARD

WARNING

Before conducting maintenance involving the removal and replacement of system components, ensure that all power to the FBCB2 system is off (including power from the vehicle). Failure to comply with warning may result in equipment damage or injury to personnel.

a. Power down AN/UYK-128(V) system IAW Operator's Manual TM 11-7010-326-10 or Pocket Guide TB 11-7010-326-10.

b. Loosen two thumbscrews on Amplifier and Fastener Guard.

c. Raise guard bumper as high as it will go and tighten thumbscrews.

d. Remove SINCGARS radio, amplifier, amplifier-adapter and mounting base IAW TM 11-5820-890-20.

NOTE

The HMMWV Amplifier and Fastener Guard is attached to the underside of the rack top shelf. When the SINCGARS mounting base is removed, the two screws that hold the guard are exposed.

e. Remove two hex screws (5), flat washers (4), lock washers (3) and hex nuts (2) from Amplifier and Fastener Guard and rack top shelf using 7/16" socket with ratchet and 7/16" open-end wrench.

f. Remove Amplifier and Fastener Guard (1) from rack.

K–6.12.2 REPLACE AMPLIFIER AND FASTENER GUARD

a. Align Amplifier and Fastener Guard (1) mounting holes with rack top shelf mounting holes.

b. Install and tighten two hex screws (5), flat washers (4), lock washers (3) and hex nuts (2) on Amplifier and Fastener Guard and rack top shelf using 7/16" socket with ratchet and 7/16" open-end wrench.

c. Loosen two thumbscrews on Amplifier and Fastener Guard bumper.

d. Raise guard bumper as high as it will go and tighten thumbscrews.

e. Replace SINCGARS radio, amplifier, amplifier-adapter and mounting base IAW TM 11-5820-890-20.

f. Loosen two thumbscrews on Amplifier and Fastener Guard bumper.

g. Lower guard bumper until it lightly rests on the cooling fins of the amplifier.

h. Tighten thumbscrews.

i. Perform Functional Check IAW paragraph K–6.1.

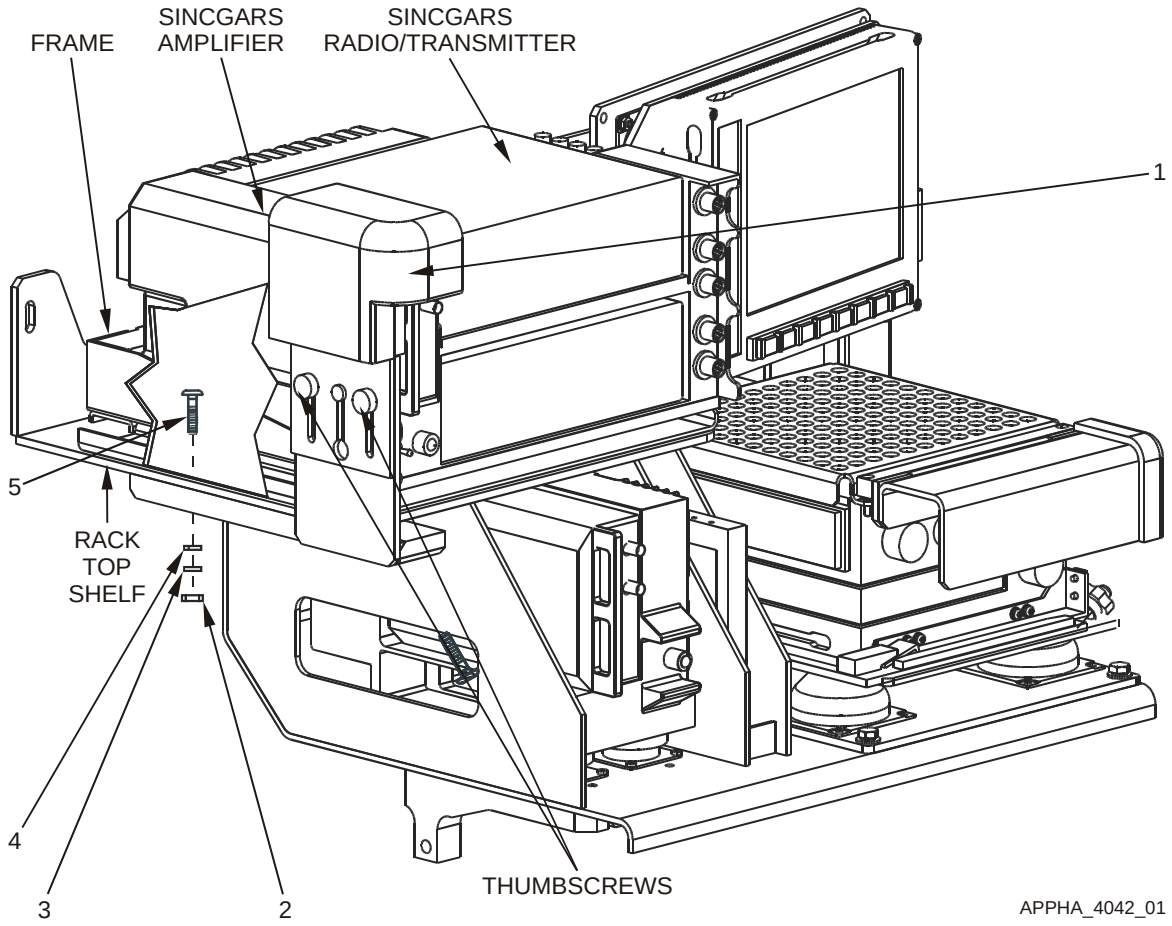

Figure K-9. Remove and Replace Amplifier and Fastener Guard

Key and Parts List for Figure K-9

ITEM NO.	NOMENCLATURE	CAGE CODE	PART NUMBER	NSN	QTY	SMR
1	Amplifier and Fastener Guard) Guard, Amplifier	0J198	872842-1		1	PAOZZ
2	Nut, Plain, Hexagon	96906	MS35649-2252	5310-00-997-1888	2	PAOZZ
3	Washer, Lock	96906	MS35338-44	5310-00-582-5965	2	PAOZZ
4	Washer, Flat	96906	MS27183-10	5310-00-809-4058	2	PAOZZ
5	Screw, Cap, Hexagon	39428	99240A544		2	PAOZZ

This page intentionally left blank.

APPENDIX L

SUPPLEMENTARY INFORMATION FOR

M997 HMMWV AMBULANCE

TABLE OF CONTENTS

Page

L–1 GENERAL L–3
L–2 COMPONENT ITEM NUMBERS AND PART NUMBERS L–3
L–3 SYSTEM INTERFACES L–3
L–3.1 MECHANICAL L–3
L–3.2 CABLE INTERFACES L–4
L–4 COMPONENT LOCATION L–6
L–4.1 GENERAL LOCATION L–6
L–4.2 MOUNTING L–6
L–5 PLATFORM-UNIQUE TROUBLESHOOTING L–8
L–6 REMOVAL/REPLACEMENT IN THE PLATFORM L–8
L–6.1 FUNCTIONAL CHECK L–8
L–6.2 REMOVE/REPLACE W1 POWER CABLE L–9
L–6.3 REMOVE/REPLACE W2 DISPLAY CABLE L–10
L–6.4 REMOVE/REPLACE W3 SERIAL INTERFACE ADAPTER DEVICE (SIAD) L–11
L–6.5 REMOVE/REPLACE W3P PLGR CABLE L–12
L–6.6 REMOVE/REPLACE W3N INC CABLE L–13
L–6.7 REMOVE/REPLACE PU ISOLATION ASSEMBLY L–15
L–6.8 REMOVE/REPLACE PU MOUNTING BRACKET L–18
L–6.9 REMOVE/REPLACE DU ISOLATION ASSEMBLY L–20
L–6.10 REMOVE/REPLACE RAM-BALL ASSEMBLY L–23
L–6.11 REMOVE/REPLACE EQUIPMENT RACK L–27
L–6.12 REMOVE/REPLACE KEYBOARD UNIT (KU) STOWAGE BOX L–33
L–6.13 REMOVE/REPLACE KEYBOARD UNIT (KU) STOWAGE BOX DOOR LATCHES L–35

LIST OF ILLUSTRATIONS

Page
Figure L-1. Equipment Interface Block Diagram L–5
Figure L-2. Relative Component Locations L–6
Figure L-3. Equipment Rack Component Mounting L–6
Figure L-4. KU Stowage Box Mounting L–7
Figure L-5. PU and PU Isolation Assembly Overhead Compartment Mounting L–7
Figure L-6. Cable Run L–14
Figure L-7. Remove and Replace PU Isolation Assembly and PU Mounting Bracket L–16
Figure L-8. Remove and Replace DU Isolation Assembly L–22
Figure L-9. Remove and Replace RAM-Ball Assembly L–25
Figure L-10. Remove and Replace Equipment Rack L–31
Figure L-11. Remove and Replace Keyboard Unit (KU) Stowage Box L–33
Figure L-12. Remove and Replace Keyboard Unit (KU) Stowage Box Latch L–36

L–1 GENERAL

This appendix describes the interfaces between the FBCB2 equipment and the M997 HMMWV Ambulance. This appendix also identifies the component parts of the M997 platform installation kit and details the removal and replacement procedures particular to the M997 HMMWV Ambulance.

L–2 COMPONENT ITEM NUMBERS AND PART NUMBERS

Key and Parts List tables contained in the Removal and Replacement section of this Appendix serve a dual purpose. Use the Item Numbers in the Key to identify components and attaching hardware shown in the Figures illustrating the tasks. The nomenclature and part number for the hardware and equipment mounting components of the installation kit also are keyed to the Item Numbers in the tables. Additional parts ordering information, such as Contractor and Government Entity code (CAGE); National Stock Number (NSN); quantity; and Source, Maintenance and Recoverability (SMR) codes, are provided. The Key and Parts List follow the task illustrations.

L–3 SYSTEM INTERFACES

L–3.1 MECHANICAL

The mechanical hardware-to-hardware interfaces include:

a. Cables

b. Processor Unit (PU)

c. Display Unit (DU)

d. Keyboard Unit (KU)

L–3.2 CABLE INTERFACES

Figure L-1 illustrates a block diagram of the interface between FBCB2 equipment and the M997 HMMWV Ambulance (Platform). Figure L-1 also illustrates the signal and control interfaces along with the terminal connector labels (e.g., P1, P2). The purpose of each cable is listed below:

Cable Name	Purpose
W1–Cable	Supplies vehicle power (28 VDC) to the AN/UYK-128(V) computer and its subassemblies.
W2–Cable	Supplies power and signals to the Display Unit (DU) and Keyboard Unit (KU). Returns Man Machine Interface (MMI) information from the KU to the Processor Unit (PU).
W3–Cable	The Serial Interface Adapter Device (SIAD) is a conduit assembly that breaks out each of the serial interface ports to a connector.
W3P–Cable	Collects position and time information from the PLGR.
W3N–Cable	Provides duplex communication between the PU, Internet Controller (INC) and radios.
W5–Cable	The Expansion Interface Adapter Device (EIAD) is connected to the Universal Serial Bus (USB) connector only when this vehicle is to be used in a Tactical Operations Center (TOC) setup. When used in this configuration, the EIAD is connected between the PU J5 connector and local router.
Ground Strap	Provides safety ground for the PU.
Ground Strap	Provides safety ground for the DU.

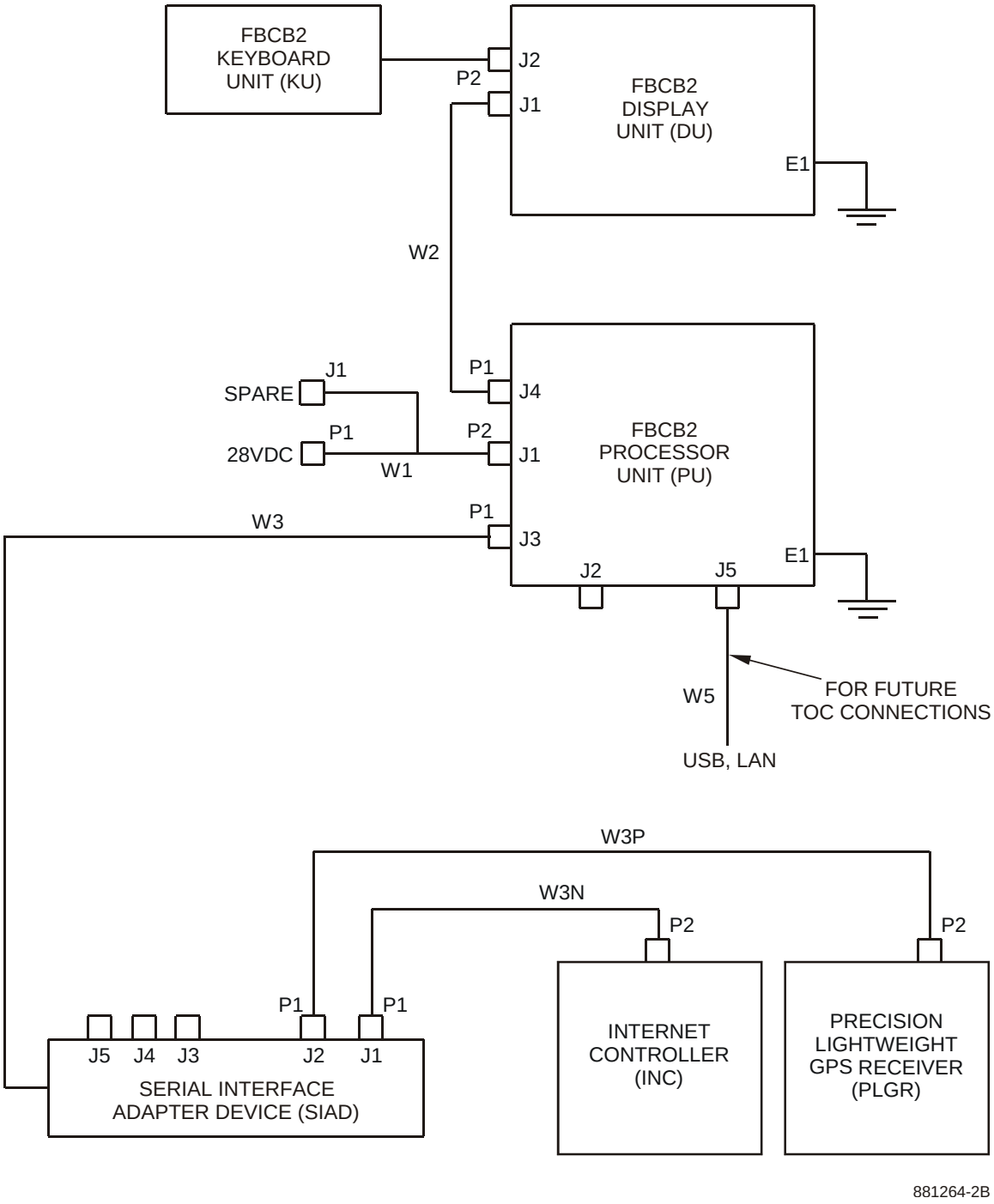

Figure L-1. Equipment Interface Block Diagram

L–4 COMPONENT LOCATION

L–4.1 GENERAL LOCATION

Figure L-2 illustrates the relative locations of the FBCB2 computer equipment and mounting components in the cab of the M997 platform. Refer to mounting illustrations for detailed views.

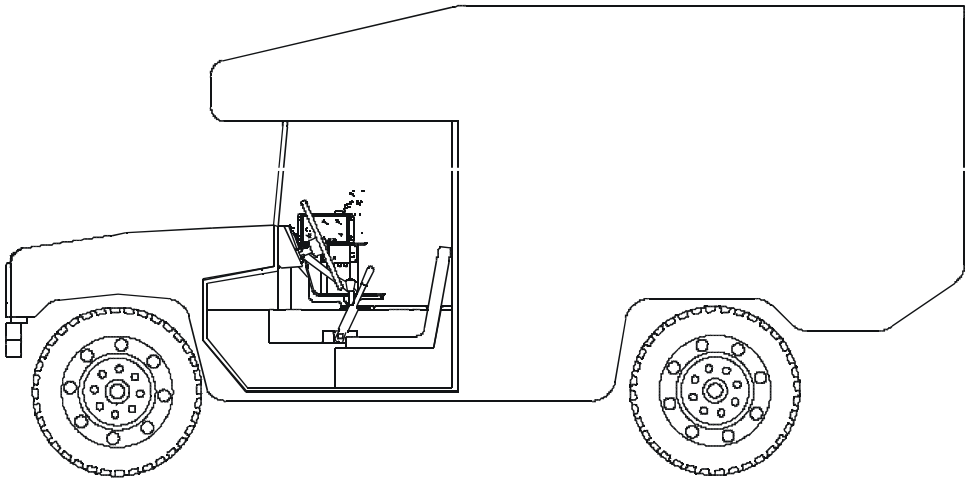

Figure L-2. Relative Component Locations

L–4.2 MOUNTING

Figure L-3 illustrates how some FBCB2 components are mounted between the driver and passenger on an equipment rack in the dashboard area of the M997 HMMWV Ambulance.

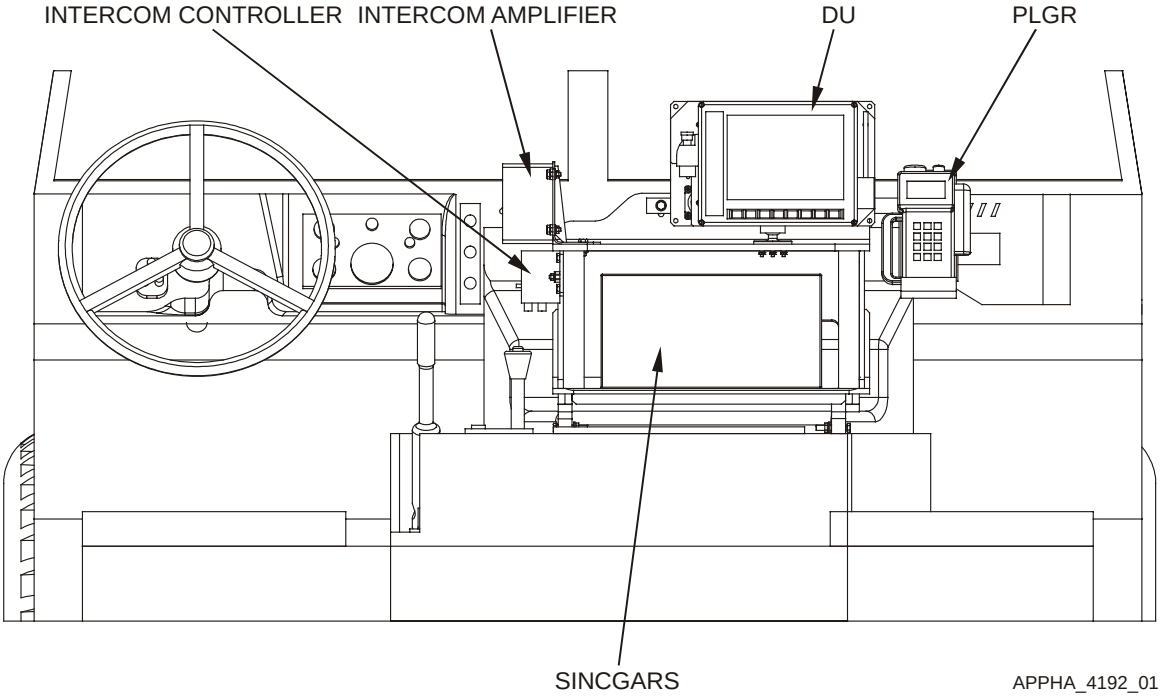

Figure L-3. Equipment Rack Component Mounting

L–4.2.1 KU STOWAGE BOX MOUNTING

Figure L-4 illustrates the KU stowage box mounted on the cab ceiling above the driver.

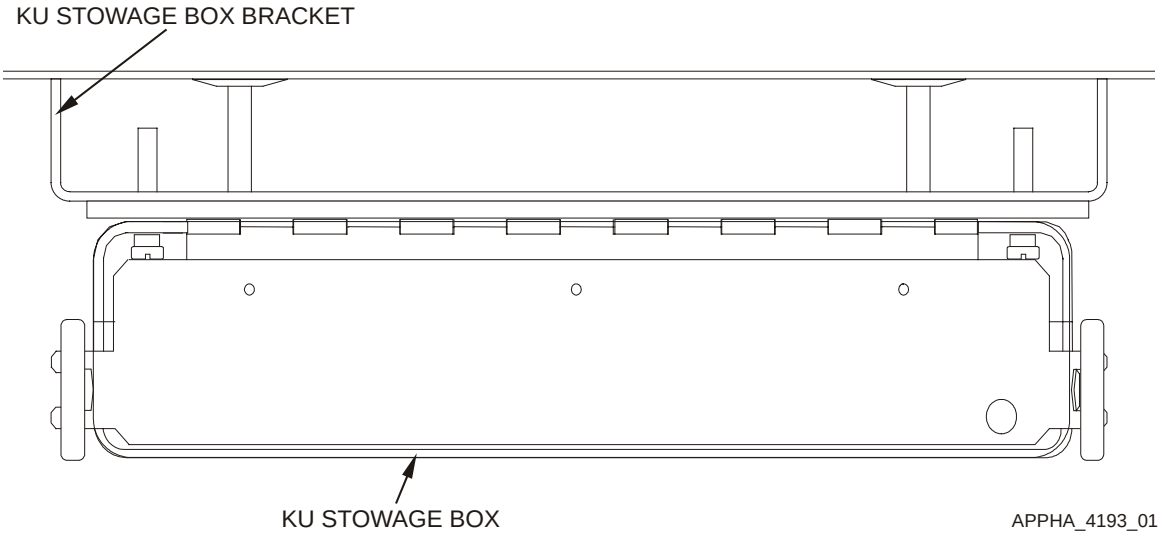

Figure L-4. KU Stowage Box Mounting

L–4.2.2 PU MOUNTING

Figure L-5 illustrates the PU mounting in the center of the overhead compartment area above the windshield.

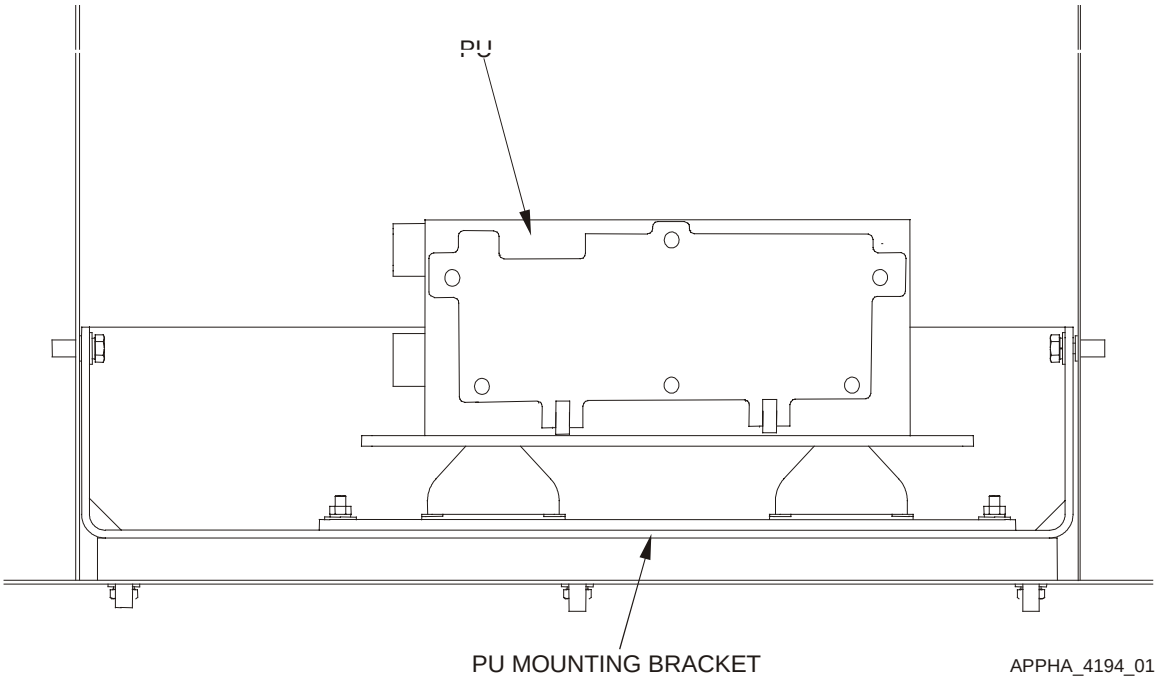

Figure L-5. PU and PU Isolation Assembly Overhead Compartment Mounting

L–5 PLATFORM-UNIQUE TROUBLESHOOTING

No unique troubleshooting procedures are required for this vehicle.

L–6 REMOVAL/REPLACEMENT IN THE PLATFORM

Most installations must be tailored to the platform. Cables and brackets are unique to the installation. Before a part or assembly is removed from a vehicle, fill out a “Maintenance Request” DA Form 2407. One copy of this completed form must remain with the vehicle and the remaining copies must be kept with the failed component. To prove the operability of the system after an item is replaced, perform the system Functional Check.

L–6.1 FUNCTIONAL CHECK

L–6.1.1 POWER UP

Power up and initialize all interface equipment and the AN/UYK-128(V) In Accordance With (IAW) the Operator’s Manual TM 11-7010-326-10, or Pocket Guide TB 11-7010-326-10.

L–6.1.2 VERIFICATION

NOTE

Observe that the Display Unit PWR, DISP and CPU green LED lights are lit.

a. Observe that the PLGR synchronizes with PU, indicated by the PLGR dialog box showing green.

b. Observe that the Router synchronizes with the PU, indicated by the Router dialog box showing green.

c. At the Session Manager screen, select OPS button to display the OPS screen.

d. Verify the GPS status is either green or amber on the Classification/Status Bar.

e. Verify the Communications status is either green or amber on the Classification/Status Bar.

L–6.1.3 POWER DOWN

Power down all interface equipment and the AN/UYK-128(V) IAW the Operator’s Manual TM 11-7010-326-10, or Pocket Guide TB 11-7010-326-10.

L–6.2 REMOVE/REPLACE W1 POWER CABLE

Refer to Figure L-6.

L–6.2.1 REMOVE W1 POWER CABLE

WARNING

Before conducting maintenance involving the removal and replacement of system components, ensure that all power to the FBCB2 system is off (including power from the vehicle). Failure to comply with warning may result in equipment damage or injury to personnel.

a. Power down AN/UYK-128(V) system IAW Operator's Manual TM 11-7010-326-10, or Pocket Guide TB 11-7010-326-10.

b. Power down SINCGARS IAW TM 11-5820-890-10-8.

c. Unlatch and slide the Vehicle Amplifier-Adapter (VAA) forward from SINCGARS Mounting Base (MB) to allow access to W1 cable connector IAW TM 11-5820-890-10-8.

d. Disconnect W1-P1 cable connector from the SINCGARS Mounting Base (MB) (MT-6352A/VRC) A4-J2 connector.

e. Disconnect W1-P2 cable connector from PU J1 connector.

f. Install protective cap on PU J1 connector.

NOTE

Note cable routing and tie-wrap locations before removing cable or tie-wraps.

g. Remove tie-wraps securing W1 cable using diagonal wire cutters.

h. Remove W1 power cable (3).

L–6.2.2 REPLACE W1 POWER CABLE

a. Route W1 power cable (3).

b. Remove protective cap from PU J1 connector.

c. Connect W1-P2 cable connector to PU J1 connector.

d. Connect W1-P1 cable connector to SINCGARS Mounting Base (MB) (MT-6352A/VRC) A4-J2 connector.

e. Secure W1 cable using tie-wraps, as applicable.

f. Dress tie-wraps using diagonal wire cutters.

g. Slide Vehicle Amplifier-Adapter (VAA) back into place on SINCGARS Mounting Base and secure IAW TM 11-5820-890-10-8.

h. Perform Functional Check IAW paragraph L–6.1.

L–6.3 REMOVE/REPLACE W2 DISPLAY CABLE

Refer to Figure L-6.

L–6.3.1 REMOVE W2 DISPLAY CABLE

WARNING

Before conducting maintenance involving the removal and replacement of system components, ensure that all power to the FBCB2 system is off (including power from the vehicle). Failure to comply with warning may result in equipment damage or injury to personnel.

a. Power down AN/UYK-128(V) system IAW Operator's Manual TM 11-7010-326-10, or Pocket Guide TB 11-7010-326-10.

b. Disconnect W2-P1 cable connector from PU J4 connector.

c. Install protective cap on PU J4 connector.

d. Disconnect W2-P2 cable connector from display J1 connector.

e. Install protective cap on display J1 connector.

NOTE

Note cable routing and tie-wrap locations before removing cable or tie-wraps.

f. Remove tie-wraps from W2 cable using diagonal wire cutters.

g. Remove W2 display cable (1).

L–6.3.2 REPLACE W2 DISPLAY CABLE

a. Route W2 display cable (1).

b. Remove protective cap from display J1 connector.

c. Connect W2-P2 cable connector to display J1 connector.

d. Remove protective cap from PU J4 connector.

e. Connect W2-P1 cable connector to PU J4 connector.

f. Secure W2 cable using tie-wraps.

g. Dress tie-wraps using diagonal wire cutters.

h. Perform Functional Check IAW paragraph L–6.1.

L–6.4 REMOVE/REPLACE W3 SERIAL INTERFACE ADAPTER DEVICE (SIAD)

Refer to Figure L-6.

L–6.4.1 REMOVE W3 SERIAL INTERFACE ADAPTER DEVICE (SIAD)

WARNING

Before conducting maintenance involving the removal and replacement of system components, ensure that all power to the FBCB2 system is off (including power from the vehicle). Failure to comply with warning may result in equipment damage or injury to personnel.

a. Power down AN/UYK-128(V) system IAW Operator's Manual TM 11-7010-326-10, or Pocket Guide TB 11-7010-326-10.

b. Disconnect W3N-P1 INC cable connector from W3 SIAD J1 connector.

c. Disconnect W3P-P1 PLGR cable connector from W3 SIAD J2 connector.

d. Disconnect W3 SIAD-P1 cable connector from PU J3 connector.

e. Install protective cap on PU J3 connector.

NOTE

Note cable routing and tie-wrap locations before removing cable or tie-wraps.

f. Remove tie-wraps securing W3 SIAD using diagonal wire cutters.

g. Remove W3 SIAD (2).

L–6.4.2 REPLACE W3 SERIAL INTERFACE ADAPTER DEVICE (SIAD)

a. Route W3 SIAD (2) into original position.

b. Remove protective cap from PU J3 connector.

c. Connect W3 SIAD-P1 cable connector to PU J3 connector.

d. Connect W3P-P1 PLGR cable connector to W3 SIAD J2 connector.

e. Connect W3N-P1 INC cable connector to W3 SIAD J1 connector.

f. Secure W3 SIAD using tie-wraps.

g. Dress tie-wraps using diagonal wire cutters.

h. Perform Functional Check IAW paragraph L–6.1.

L–6.5 REMOVE/REPLACE W3P PLGR CABLE

Refer to Figure L-6.

L–6.5.1 REMOVE W3P PLGR CABLE

WARNING

Before conducting maintenance involving the removal and replacement of system components, ensure that all power to the FBCB2 system is off (including power from the vehicle). Failure to comply with warning may result in equipment damage or injury to personnel.

a. Power down AN/UYK-128(V) system IAW Operator's Manual TM 11-7010-326-10, or Pocket Guide TB 11-7010-326-10.

b. Disconnect W3P-P1 cable connector from W3 SIAD J2 connector.

c. Unfasten over-center latch and remove PLGR from mounting rack.

d. Disconnect W3P-P2 cable connector from PLGR J2 connector using offset flat-tip screwdriver.

NOTE

Note cable routing and tie-wrap locations before removing cable or tie-wraps.

e. Remove tie-wraps securing W3P cable using diagonal wire cutters.

f. Remove W3P cable (5).

L–6.5.2 REPLACE W3P PLGR CABLE

a. Route W3P cable (5).

b. Connect W3P-P2 cable connector to PLGR J2 connector using offset flat-tip screwdriver.

c. Install PLGR into mounting rack and fasten over-center latch.

d. Connect W3P-P1 cable connector to W3 SIAD J2 connector.

e. Secure W3P cable using tie-wraps.

f. Dress tie-wraps using diagonal wire cutters.

g. Perform Functional Check IAW paragraph L–6.1.

L–6.6 REMOVE/REPLACE W3N INC CABLE

Refer to Figure L-6.

L–6.6.1 REMOVE W3N INC CABLE

WARNING

Before conducting maintenance involving the removal and replacement of system components, ensure that all power to the FBCB2 system is off (including power from the vehicle). Failure to comply with warning may result in equipment damage or injury to personnel.

a. Power down AN/UYK-128(V) system IAW Operator's Manual TM 11-7010-326-10, or Pocket Guide TB 11-7010-326-10.

b. Disconnect W3N-P1 cable connector from W3 SIAD J1 connector.

c. Disconnect W3N-P2 cable connector from SINCGARS INC A2-J6 connector.

NOTE

Note cable routing and tie-wrap locations before removing cable or tie-wraps.

d. Remove tie-wraps securing W3N cable using diagonal cutters.

e. Remove W3N cable (4).

L–6.6.2 REPLACE W3N INC CABLE

a. Route W3N cable (4).

b. Connect W3N-P2 cable connector to SINCGARS INC A2-J6 connector.

c. Connect W3N-P1 cable connector to W3 SIAD J1 connector.

d. Secure W3N cable using tie-wraps.

e. Dress tie-wraps using diagonal wire cutters.

f. Perform Functional Check IAW paragraph L–6.1.

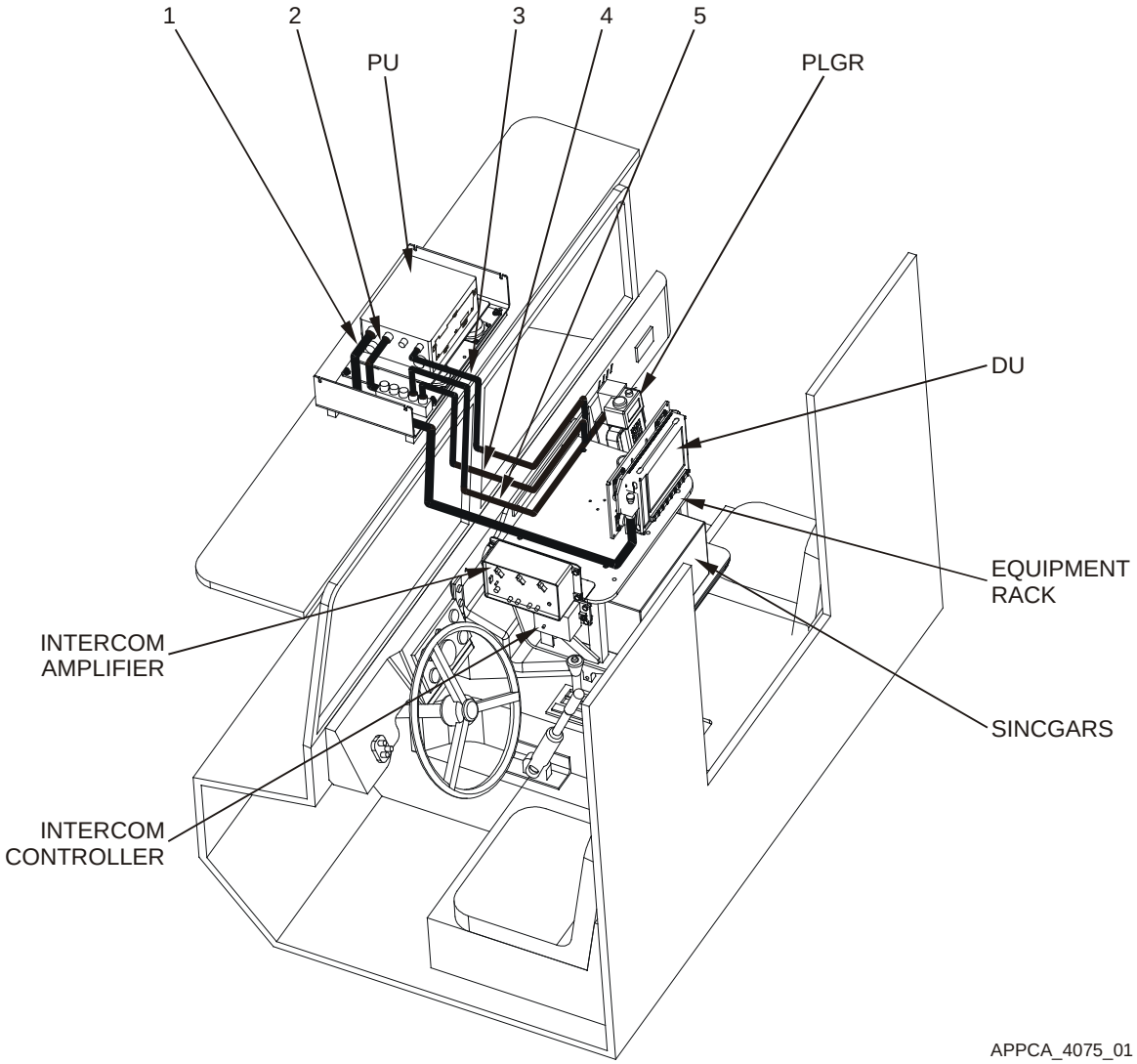

Figure L-6. Cable Run

Key and Parts List for Figure L-6

ITEM NO.	NOMENCLATURE	CAGE CODE	PART NUMBER	NSN	QTY	SMR
1	Cable Assembly W2	0J198	881327-2	5995-01-478-4873	1	PAODD
2	Adapter Assy SIAD W3	0J198	881331-1	4920-01-478-3722	1	PAODD
3	Cable Assembly W1	0J198	866003-1	5995-01-478-4901	1	PAODD
4	Cable Assembly W3N	0J198	861336-3	5995-01-478-5080	1	PAODD
5	Cable Assembly W3P	0J198	881335-3	5995-01-478-4898	1	PAODD
--	Strap, Tie Down, Elect	39428	7130K31		A/R	PAOZZ
--	Holder, Cable, Tie 2W	39428	7566K27		A/R	PAOZZ

L–6.7 REMOVE/REPLACE PU ISOLATION ASSEMBLY

Refer to Figure L-7.

NOTE

Ground straps are attached to components at one end (PU and DU) and a frame ground at the other end. Regardless of where the ground strap terminates, it is usually a burnished (void of paint) area. If the ground strap is removed from a burnished area, make sure to return it to the same burnished area. Where applicable, always connect the ground strap first when assembling, and disconnect the ground strap last when disassembling.

L–6.7.1 REMOVE PU ISOLATION ASSEMBLY

WARNING

Before conducting maintenance involving the removal and replacement of system components, ensure that all power to the FBCB2 system is off (including power from the vehicle). Failure to comply with warning may result in equipment damage or injury to personnel.

a. Power down AN/UYK-128(V) system IAW Operator's Manual TM 11-7010-326-10, or Pocket Guide TB 11-7010-326-10.

NOTE

Do not remove the Removable Hard Disk Drive Cartridge (RHDDC) or locking bracket from PU.

b. Remove PU IAW Unit Maintenance Manual TM 11-7010-326-20&P, Chapter 2.

c. Remove one hex head nut (6), lock washer (7), flat washer (8) and ground strap from PU isolation assembly (1) bottom plate using a 7/16" socket with ratchet and 3" extension.

d. Remove remaining three hex head nuts (6), lock washers (7) and flat washers (8) from PU isolation assembly (1) bottom plate using a 7/16" socket with ratchet and 3" extension.

e. Remove PU isolation assembly (1) from PU mounting bracket (5).

L–6.7.2 REPLACE PU ISOLATION ASSEMBLY

a. Align four PU isolation assembly (1) bottom plate holes with installation studs on PU mounting bracket (5).

NOTE

To ensure positive ground, PU ground strap must make direct contact with bare metal. Ensure PU ground strap is installed in its original location at the PU isolation assembly bottom plate mounting hole. Slip the ground strap, flat washer and lock washer on the mounting stud before installing and tightening nut.

b. Install ground strap, one flat washer (8), lock washer (7) and hex head nut (6), on PU isolation assembly (1) bottom plate and PU mounting bracket (5) stud using a 7/16” socket with ratchet and 3” extension.

c. Install remaining three flat washers (8), lock washers (7) and hex head nuts (6) on PU isolation assembly (1) bottom plate and PU mounting bracket (5) studs using a 7/16” socket with ratchet and 3” extension.

d. Install PU IAW Unit Maintenance Manual TM 11-7010-326-20&P, Chapter 2.

e. Perform Functional Check IAW paragraph L–6.1.

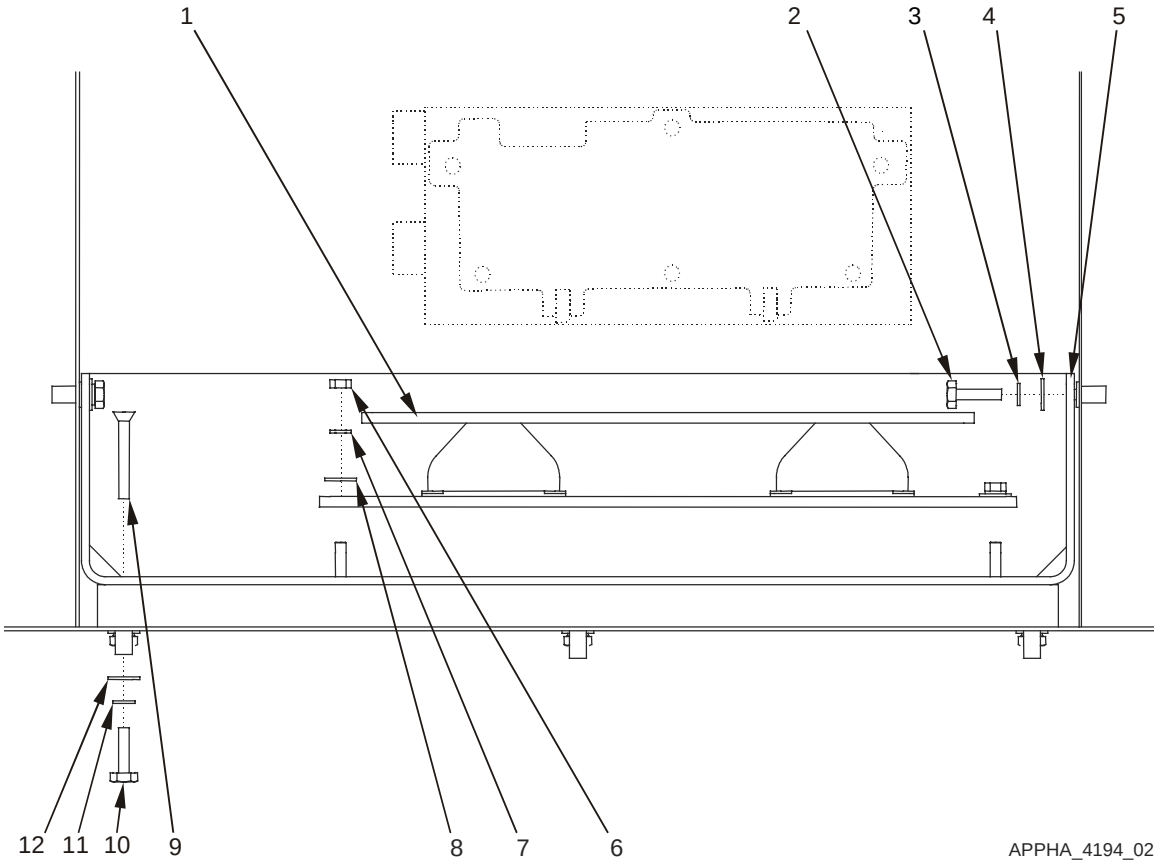

Figure L-7. Remove and Replace PU Isolation Assembly and PU Mounting Bracket

Key and Parts List for Figure L-7

ITEM NO.	NOMENCLATURE	CAGE CODE	PART NUMBER	NSN	QTY	SMR
1	(PU Isolation Assembly) Plate, Resilient Mount PU	0J198	872826-1	5340-01-481-5742	1	PAODD
2	Screw, Cap, Hexagon	80204	B1821AH025C075N	5305-01-289-8000	4	PAOZZ
3	Washer, Lock	96906	MS35338-44	5310-00-582-5965	4	PAOZZ
4	Washer, Flat	96906	MS27183-10	5310-00-809-4058	4	PAOZZ
5	Bracket, Mounting PU	0J198	866010-1		1	PAOZZ
6	Nut, Plain, Hexagon	96906	MS35649-2252	5310-00-997-1888	4	PAOZZ
7	Washer, Lock	96906	MS35338-44	5310-00-582-5965	4	PAOZZ
8	Washer, Flat	96906	MS27183-10	5310-00-809-4058	4	PAOZZ
9	Screw, Flat Head	96906	MS35190-293	5305-00-958-5248	3	PAOZZ
10	Screw, Cap Hexagon	80204	B1821AH025C075N	5305-01-389-8000	3	PAOZZ
11	Washer, Lock	96906	MS35338-44	5310-00-582-5965	3	PAOZZ
12	Washer, Flat	96906	MS27183-10	5310-00-809-4058	3	PAOZZ
--	Assembly, PU Lock	0J198	861865-1		1	XBOOO
--	Bracket, Locking	0J198	861871-1		1	XBOZZ
--	Screw	80205	MS35190-253	5305-00-059-4568	2	PAOZZ

L–6.8 REMOVE/REPLACE PU MOUNTING BRACKET

Refer to Figure L-7.

L–6.8.1 REMOVE PU MOUNTING BRACKET

WARNING

Before conducting maintenance involving the removal and replacement of system components, ensure that all power to the FBCB2 system is off (including power from the vehicle). Failure to comply with warning may result in equipment damage or injury to personnel.

a. Power down AN/UYK-128(V) system IAW Operator's Manual TM 11-7010-326-10, or Pocket Guide TB 11-7010-326-10.

NOTE

Do not remove the Removable Hard Disk Drive Cartridge (RHDDC) or locking bracket from PU.

b. Remove PU IAW Unit Maintenance Manual TM 11-7010-326-20&P, Chapter 2.

c. Remove PU isolation assembly IAW paragraph L–6.7.1.

NOTE

Note cable routing and tie-wrap locations before removing cable or tie-wraps.

d. Remove tie-wraps securing cables to PU mounting bracket using diagonal wire cutters.

e. Remove four hex head screws (2), lock washers (3) and flat washers (4) from the sides (left and right) of PU mounting bracket (5) using a 7/16" socket with ratchet.

f. Remove three hex head screws (10), lock washers (11) and flat washers (12) from bottom forward side of PU mounting bracket (5) using a 7/16" socket with ratchet and 3" extension.

g. Remove three flat head screws (9) from bottom aft side of PU mounting bracket using a No. 3 cross-tip screwdriver.

h. Remove PU mounting bracket (5).

L–6.8.2 REPLACE PU MOUNTING BRACKET

a. Align six holes in PU mounting bracket (5) bottom and four side holes with the stowage area installation holes.

b. Install three hex head screws (10), lock washers (11) and flat washers (12) on bottom forward side of PU mounting bracket (5) using a 7/16” socket with a ratchet and 3” extension.

c. Install three flat head screws (9) on bottom aft side of PU mounting bracket (5) using a No. 3 cross-tip screwdriver.

d. Install four hex head screws (2), lock washers (3) and flat washers (4) on the sides (left and right) of PU mounting bracket (5) using a 7/16” socket with ratchet.

e. Install PU isolation assembly IAW paragraph L–6.7.2.

f. Install PU IAW Unit Maintenance Manual TM 11-7010-326-20&P, Chapter 2.

g. Secure cables using tie-wraps.

h. Dress tie-wraps using diagonal wire cutters.

i. Perform Functional Check IAW paragraph L–6.1.

L–6.9 REMOVE/REPLACE DU ISOLATION ASSEMBLY

Refer to Figure L-8.

NOTE

Ground straps are attached to components at one end (PU and DU) and a frame ground at the other end. Regardless of where the ground strap terminates, it is usually a burnished (void of paint) area. If the ground strap is removed from a burnished area, make sure to return it to the same burnished area. Where applicable, always connect the ground strap first when assembling, and disconnect the ground strap last when disassembling.

L–6.9.1 REMOVE DU ISOLATION ASSEMBLY

WARNING

Before conducting maintenance involving the removal and replacement of system components, ensure that all power to the FBCB2 system is off (including power from the vehicle). Failure to comply with warning may result in equipment damage or injury to personnel.

a. Power down AN/UYK-128(V) system IAW Operator's Manual TM 11-7010-326-10, or Pocket Guide TB 11-7010-326-10.

b. Remove DU IAW Unit Maintenance Manual TM 11-7010-326-20&P, Chapter 2.

NOTE

Note cable routing and tie-wrap locations before removing cable or tie-wraps.

c. Remove tie-wraps securing W2 display cable and ground strap to DU isolation assembly using diagonal wire cutters.

d. Loosen RAM-Ball knob while supporting DU isolation assembly (1) until RAM-Ball display base with ball can be lifted free of RAM-Ball socket arm.

e. Remove four self-locking wing nuts (6), lock washers (5), flat washers(4) and square neck bolts (2) from DU adapter plate (3) and DU isolation assembly (1) bottom plate.

f. Remove DU isolation assembly (1) from DU adapter plate (3).

L–6.9.2 REPLACE DU ISOLATION ASSEMBLY

a. Align four installation holes in DU adapter plate with slots in DU isolation assembly (1) bottom plate.

b. Install four square neck bolts (2), flat washers(4), lock washers (5) and self-locking wing nuts (6) in DU adapter plate and DU isolation assembly (1) bottom plate.

CAUTION

Ensure RAM-Ball is free of dirt and contaminants before reassembling. Failure to comply can result in slippage or excess wear of RAM-Ball assembly.

c. Inspect and clean RAM-Ball socket arm and display base with ball, as necessary, using clean lint-free wipes.

d. Insert RAM-Ball display base with ball into RAM-Ball socket arm.

e. Adjust viewing angle and tighten RAM-Ball knob.

f. Install DU IAW Unit Maintenance Manual TM 11-7010-326-20&P, Chapter 2.

g. Secure W2 display cable and ground strap to DU isolation assembly (1) bottom plate using tie-wraps.

h. Dress tie-wraps using diagonal wire cutters.

i. Perform Functional Check IAW paragraph L–6.1.

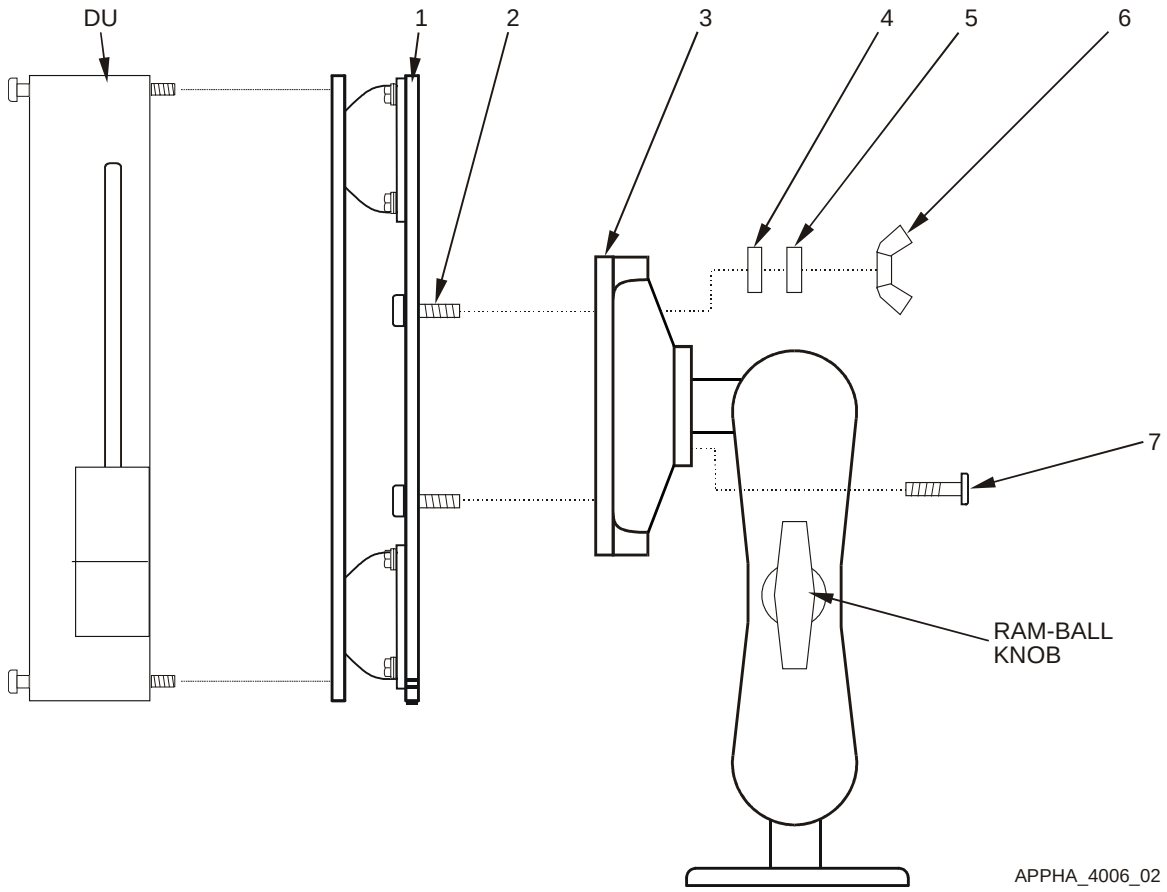

Figure L-8. Remove and Replace DU Isolation Assembly

Key and Parts List for Figure L-8

ITEM NO.	NOMENCLATURE	CAGE CODE	PART NUMBER	NSN	QTY	SMR
1	(DU Isolation Assembly) Plate, Resilient Mount DU	0J198	872870-1		1	PAODD
2	Bolt, Square Neck	96906	MS35751-17	5306-00-889-2943	4	PAOZZ
3	(DU adapter plate) Bracket, Mounting DU	0J198	872875-1		1	XBOOO
4	Washer, Flat	96906	MS27183-10	5301-00-809-4058	4	PAOZZ
5	Washer, Lock	96906	MS35338-44	5301-00-582-5965	4	PAOZZ
6	Nut, Self-Locking, Wing	96906	MS51553-420	5310-01-384-2546	4	PAOZZ
7	Screw, Flat Head	96906	MS35191-272	5305-01-285-2745	3	PAOZZ
--	Assembly, Lock DU	0J198	872843-1		1	XBOOO
--	Bracket, Locking	0J198	861871-3		1	XBOZZ
--	Washer, Lock	96906	MS35338-42	5310-00-045-3299	2	PAOZZ
--	Screw	80205	MS35190-253	5305-00-059-4568	2	PAOZZ

L–6.10 REMOVE/REPLACE RAM-BALL ASSEMBLY

Refer to Figure L-9.

NOTE

Ground straps are attached to components at one end (PU and DU) and a frame ground at the other end. Regardless of where the ground strap terminates, it is usually a burnished (void of paint) area. If the ground strap is removed from a burnished area, make sure to return it to the same burnished area. Where applicable, always connect the ground strap first when assembling, and disconnect the ground strap last when disassembling.

L–6.10.1 REMOVE RAM-BALL ASSEMBLY

WARNING

Before conducting maintenance involving the removal and replacement of system components, ensure that all power to the FBCB2 system is off (including power from the vehicle). Failure to comply with warning may result in equipment damage or injury to personnel.

a. Power down AN/UYK-128(V) system IAW Operator's Manual TM 11-7010-326-10, or Pocket Guide TB 11-7010-326-10.

b. Remove DU IAW Unit Maintenance Manual TM 11-7010-326-20&P, Chapter 2.

NOTE

Note cable routing and tie-wrap locations before removing cable or tie-wraps.

c. Remove tie-wraps securing W2 display cable and ground strap to DU isolation assembly using diagonal wire cutters.

d. Loosen RAM-Ball knob while supporting DU isolation assembly until RAM-Ball display base with ball can be lifted free of RAM-Ball socket arm.

e. Remove four self-locking wing nuts (6), lock washers (5), flat washers(4) and square neck bolts (2) from DU adapter plate (3) and DU isolation assembly bottom plate.

f. Remove three flat head screws (7) from RAM-Ball display base with ball and DU adapter plate (3) using a No. 2 cross-tip screwdriver.

g. Remove RAM-Ball socket arm from RAM-Ball mounting base with ball on equipment rack.

h. Remove three flat head screws (8), flat washers (11), lock washers (10) and hex nuts (9) from RAM-Ball mounting base with ball on equipment rack using a No. 2 cross-tip screwdriver and a 3/8" open-end wrench.

i. Remove RAM-Ball mounting base with ball from equipment rack.

L–6.10.2 REPLACE RAM-BALL ASSEMBLY

a. Align three holes in RAM-Ball mounting base with ball with equipment rack installation holes.

b. Install three flat head screws (8), flat washers (11), lock washers (10) and hex nuts (9) using a No. 2 cross-tip screwdriver and 3/8” open-end wrench.

CAUTION

Ensure RAM-Ball is free of dirt and contaminants before reassembling. Failure to comply can result in slippage or excess wear of RAM-Ball assembly.

c. Inspect and clean RAM-Ball socket arm, display and mounting base with ball, as necessary, using clean lint-free wipes.

d. Install RAM-Ball socket arm on RAM-Ball mounting base with ball.

e. Install three flat head screws (7) in RAM-Ball display base with ball and DU adapter plate (3) using a No. 2 cross-tip screwdriver.

f. Align four holes in DU adapter plate (3) with slots in DU isolation assembly bottom plate.

g. Install four square neck bolts (2), flat washers(4), lock washers (5) and self-locking wing nuts (6) in DU adapter plate (3) and DU isolation assembly bottom plate.

h. Insert RAM-Ball display base with ball into RAM-Ball socket arm.

i. Adjust viewing angle and tighten RAM-Ball knob.

j. Install DU IAW Unit Maintenance Manual TM 11-7010-326-20&P, Chapter 2.

k. Secure W2 display cable and ground strap to DU isolation assembly using tie-wraps.

l. Dress tie-wraps using diagonal wire cutters.

m. Perform Functional Check IAW paragraph L–6.1.

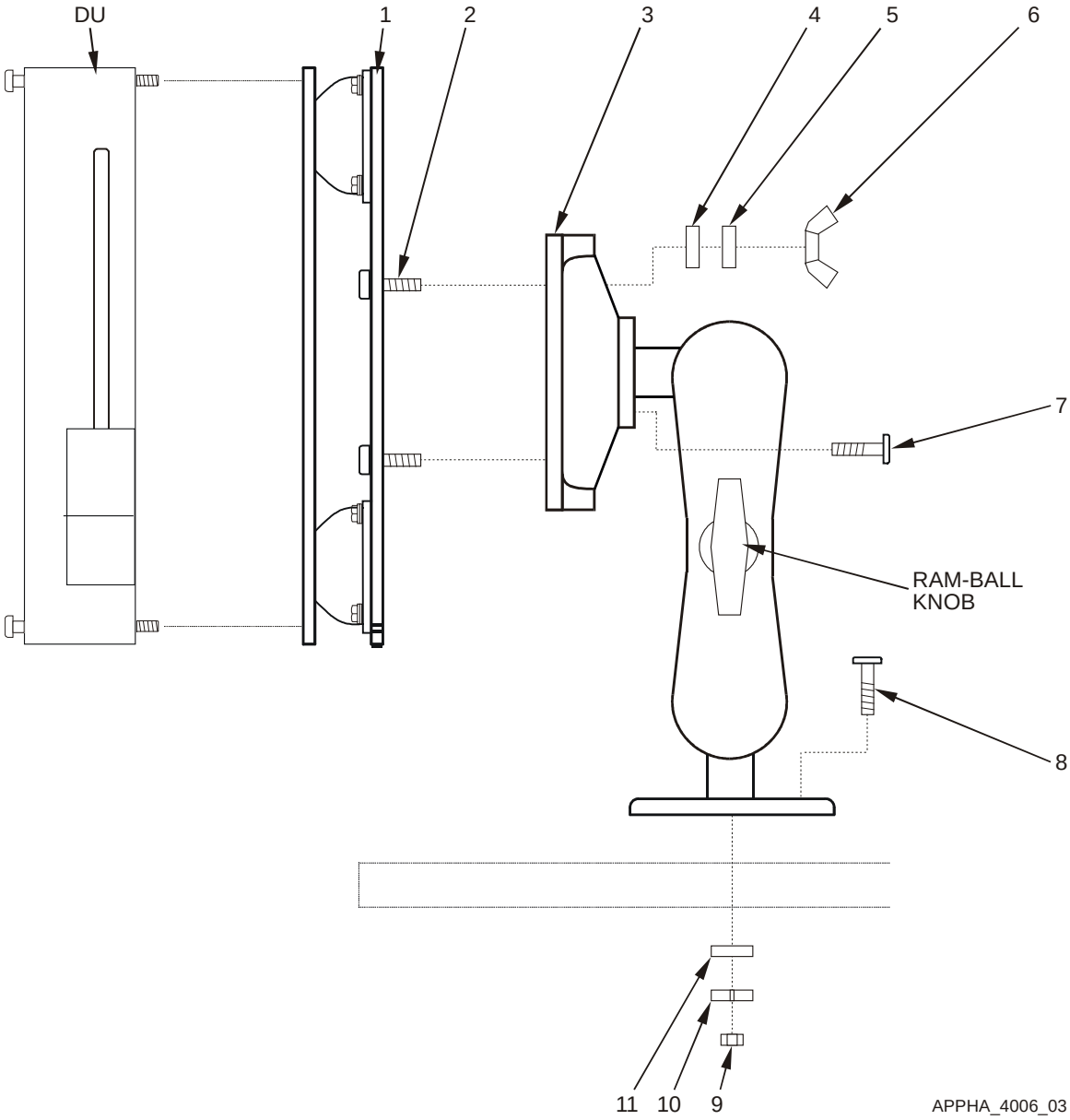

Figure L-9. Remove and Replace RAM-Ball Assembly

Key and Parts List for Figure L-9

ITEM NO.	NOMENCLATURE	CAGE CODE	PART NUMBER	NSN	QTY	SMR
1	(DU Isolation Assembly) Plate, Resilient Mount DU	0J198	872870-1		1	PAODD
2	Bolt, Square Neck	96906	MS35751-17	5306-00-889-2943	4	PAOZZ
3	(DU adapter plate) Bracket, Mounting DU	0J198	872875-1		1	XBOOO
4	Washer, Flat	96906	MS27183-10	5301-00-809-4058	4	PAOZZ
5	Washer, Lock	96906	MS35338-44	5301-00-582-5965	4	PAOZZ
6	Nut, Self-Locking, Wing	96906	MS51553-420	5310-01-384-2546	4	PAOZZ
7	Screw, Flat Head	96906	MS35191-272	5305-01-285-2745	3	PAOZZ
8	Screw, Flat Head	96906	MS35191-276	5301-00-984-7343	3	PAOZZ
9	Nut, Plain, Hexagon	96906	MS35650-302	5310-00-934-9751	3	PAOZZ
10	Washer, Lock	96906	MS35338-44	5310-00-582-5965	3	PAOZZ
11	Washer, Flat	96906	MS27183-10	5310-00-809-4058	3	PAOZZ
--	Assembly, Lock DU	0J198	872843-1		1	XBOOO
--	Bracket, Locking	0J198	861871-3		1	XBOZZ
--	Washer, Lock	96906	MS35338-42	5310-00-045-3299	2	PAOZZ
--	Screw	80205	MS35190-253	5305-00-059-4568	2	PAOZZ

L–6.11 REMOVE/REPLACE EQUIPMENT RACK

Refer to Figure L-10.

L–6.11.1 REMOVE EQUIPMENT RACK

WARNING

Before conducting maintenance involving the removal and replacement of system components, ensure that all power to the FBCB2 system is off (including power from the vehicle). Failure to comply with warning may result in equipment damage or injury to personnel.

a. Power down AN/UYK-128(V) system IAW Operator's Manual TM 11-7010-326-10, or Pocket Guide TB 11-7010-326-10.

b. Remove DU IAW Unit Maintenance Manual TM 11-7010-326-20&P, Chapter 2.

NOTE

Note cable routing and tie-wrap locations before removing cable or tie-wraps.

c. Remove tie-wraps securing W2 display cable and ground strap to DU isolation assembly using diagonal wire cutters.

d. Loosen RAM-Ball knob until DU isolation assembly and RAM-Ball display base with ball can be lifted free from socket arm.

e. Remove RAM-Ball socket arm from RAM-Ball mounting base with ball.

f. Remove PLGR from mounting bracket.

g. Disconnect W3-P2 PLGR cable connector from PLGR J2 connector using an offset flat-tip screwdriver.

h. Disconnect W3N-P2 INC cable connector from SINCGARS INC A2-J6 connector.

i. Unlatch and slide Vehicle Amplifier Adapter (VAA) (AM-7239/VRC) forward from SINCGARS Mounting Base (MB) (MT-6352/VRC) IAW TM 11-5820-890-10-8.

j. Disconnect W1-P1 power cable connector from SINCGARS MB A4-J2 connector.

k. Remove Vehicle Amplifier Adapter (VAA) (AM-7239/VRC) from SINCGARS Mounting Base (MB) (MT-6352/VRC) IAW TM 11-5820-890-10-8.

l. Remove and clear the AN/UYK-128(V) cables from Equipment Rack (20).

m. Disconnect VIC interface cables from Audio Frequency Amplifier (AM1780/VRC) power connectors.

L–6.11.1 REMOVE EQUIPMENT RACK (Continued)

NOTE:

If removing the Equipment Rack (20) due to HMMWV mechanical issues, Steps n. through t. are not required.

n. Remove RAM-Ball mounting base with ball from Equipment Rack (20) IAW paragraph L–6.10.1, step h.

o. Disconnect VIC intercom cables from intercom set (C-2298) J1 connector.

p. Remove two hex head screws (11), flat washers (9), lock washers (8) and hex nuts (7) securing the intercom controller to the intercom mounting bracket (10) using a 7/16” socket with ratchet and 3” extension.

q. Remove intercom controller from intercom mounting bracket (10).

r. Remove four hex head screws (1), flat washers (3), lock washers (4) and hex nuts (5) securing the intercom amplifier to the amplifier bracket (2) using a 7/16” socket with ratchet and 3” extension.

s. Remove intercom amplifier from amplifier bracket (2).

t. Remove SINCGARS Mounting Base MB (MT-6352/VRC) from Equipment Rack (20) IAW TM 11-5820-890-10-8.

u. Remove one hex head screw (17), lock washer (18), flat washer (19) and ground strap from PLGR bracket and Equipment Rack (20) using a 7/16” socket with ratchet.

v. Remove remaining hex head screw (16), lock washer (18) and flat washer (19) from PLGR bracket and Equipment Rack (20) using a 7/16” socket with ratchet.

w. Remove PLGR bracket from Equipment Rack (20).

x. Remove two hex head screws (21), flat washers (22), lock washers (23) and hex nuts (24) from lower Equipment Rack (20) feet and vehicle mounting bracket using a 9/16” open-end wrench, 9/16” socket with ratchet and 3” extension.

NOTE

The Equipment Rack is bulky. Assistance is required when removing the Equipment Rack from the vehicle.

y. Remove Equipment Rack (20) from vehicle.

L–6.11.2 REPLACE EQUIPMENT RACK

NOTE:

If the Equipment Rack was removed due to HMMWV mechanical issues, performance of steps a. through g. is not required. Begin Equipment Rack reinstallation with step h.

a. Install SINCGARS Mounting Base (MB) (MT-6352/VRC) on Equipment Rack (20) inserts IAW TM 11-5820-+890-10-8.

b. Align four intercom amplifier mounting slots with amplifier bracket (2) installation holes.

c. Install four hex head screws (1), flat washers (3) lock washers (4) and hex nuts (5) to secure the intercom amplifier to the amplifier bracket (2) using a 7/16” socket with ratchet and 3” extension.

d. Align two intercom controller mounting slots with intercom mounting bracket (10).

e. Install two hex head screws (11), flat washers (9), lock washers (8) and hex nuts *7) to secure the intercom controller to the intercom mounting bracket (10) using a 7/16” socket with ratchet and 3” extension.

f. Connect VIC intercom cables to intercom set (C-2298) J1 connector.

g. Install RAM-Ball mounting base with ball on Equipment Rack (20) IAW paragraph L–6.10.2, step b.

NOTE

The Equipment Rack is bulky. Assistance is required when installing the Equipment Rack in the vehicle.

h. With GPU assistance, align two upper Equipment Rack (20) holes with dashboard inserts and lower Equipment Rack (20) feet with vehicle mounting brackets.

i. Install two hex head screws (21), flat washers (22), lock washers (23) and hex nuts (24) on lower Equipment Rack (20) feet using a 9/16” open-end wrench, 9/16” socket with ratchet and 3” extension.

j. Align two PLGR bracket holes with upper Equipment Rack (20) holes and dashboard inserts.

k. Install one hex head screw (16), lock washer (18) and flat washer (19) on PLGR bracket and Equipment Rack (20) using a 7/16” socket with ratchet.

l. Install one hex head screw (17), lock washer (18), flat washer (19) and ground strap on PLGR bracket and Equipment Rack (20) using a 7/16” socket with ratchet.

m. Connect the VIC interface cables to the Audio Frequency Amplifier (AM1780/VRC) power connectors.

n. Install SINCGARS Vehicle Amplifier Adapter IAW TM 11-5820-890-10-8.

o. Connect W1-P1 power cable connector to SINCGARS MB A4-J2 connector.

p. Connect W3N-P3 INC cable to SINCGARS INC A2-J6 connector.

q. Connect W3P-P2 PLGR cable to PLGR J2 connector using an offset flat-tip screwdriver.

r. Install PLGR in mounting bracket.

L–6.11.2 REPLACE EQUIPMENT RACK (Continued)

CAUTION

Ensure RAM-Ball if free of dirt and contaminants before reassembling. Failure to comply can result in slippage or excess wear of RAM-Ball assembly.

s. Inspect and clean RAM-Ball socket arm and display base with ball, as necessary, using clean lint-free wipes.

t. Install RAM-Ball socket arm on RAM-Ball mounting base with ball.

u. Insert RAM-Ball display base with ball (with attached display isolation assembly) into socket arm.

v. Adjust viewing angle and tighten RAM-Ball knob.

w. Install DU IAW Unit Maintenance Manual TM 11-7010-326-20&P, Chapter 2.

x. Secure W2 display cable and ground strap to DU isolation assembly bottom plate using tie-wraps.

y. Dress tie-wraps using diagonal wire cutters.

z. Perform Functional Check IAW paragraph L–6.1.

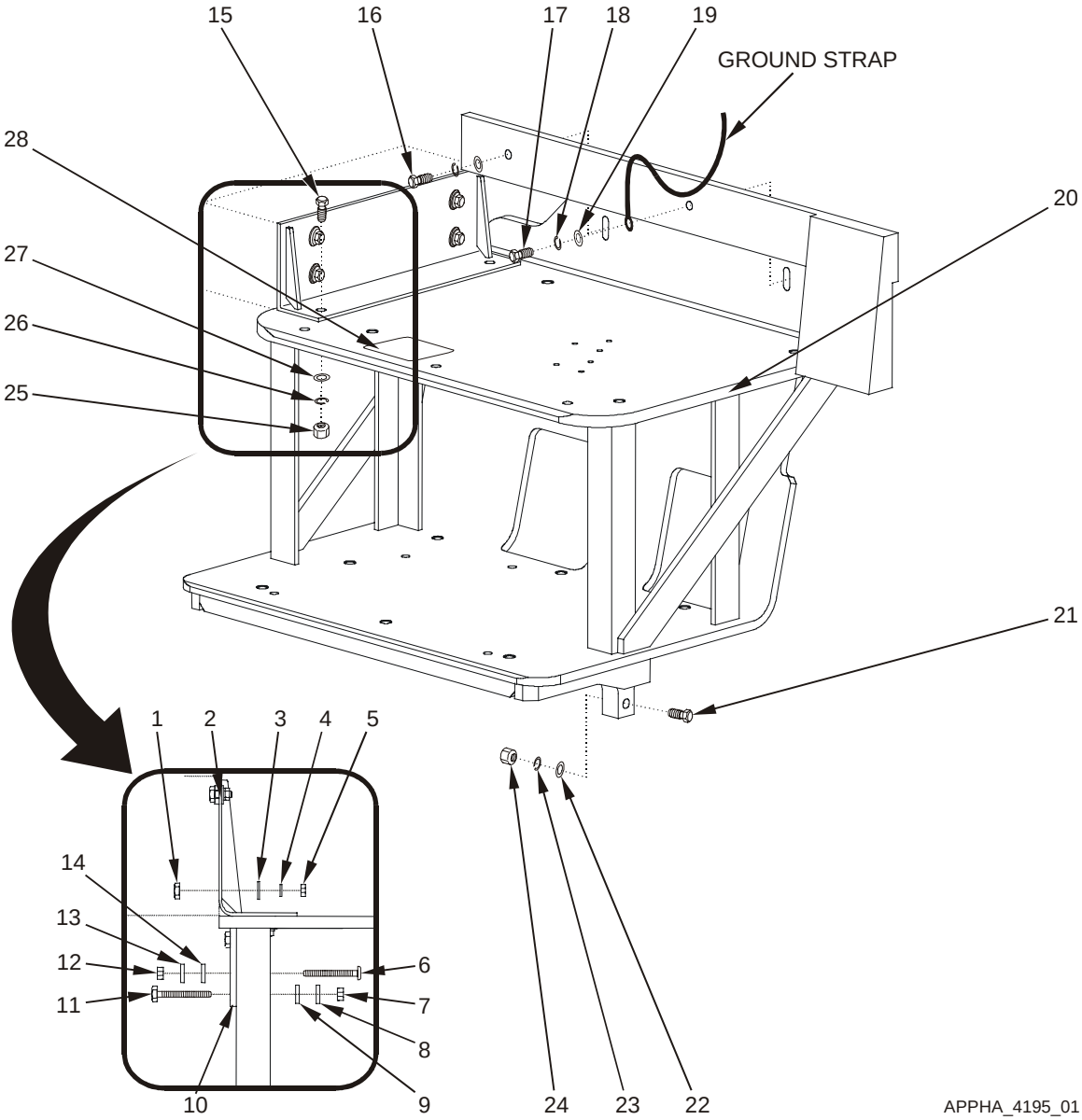

Figure L-10. Remove and Replace Equipment Rack

Key and Parts List for Figure L-10

ITEM NO.	NOMENCLATURE	CAGE CODE	PART NUMBER	NSN	QTY	SMR
1	Screw, Cap, Hexagon	80204	B1821AH025C075N	5305-01-389-8000	4	PAOZZ
2	Bracket, Amplifier	06085	A20-CO-3205		1	XBOZZ
3	Washer, Flat	96906	MS27183-10	5310-00-809-4058	4	PAOZZ
4	Washer, Lock	96906	MS35338-44	5310-00-582-5965	4	PAOZZ
5	Nut, Plain, Hexagon	96906	MS35649-2252	5310-00-997-1888	4	PAOZZ
6	Screw, Flat Head	96906	MS35190-291	5306-00-042-6921	4	PAOZZ
7	Nut, Plain, Hexagon	96906	MS35649-2252	5310-00-997-1888	2	PAOZZ
8	Washer, Lock	96906	MS35338-44	5310-00-582-5965	2	PAOZZ
9	Washer, Flat	96906	MS27183-10	5310-00-809-4058	2	PAOZZ
10	Bracket, Mounting, Intercom	0J198	866011-1		1	PAOZZ
11	Screw, Cap, Hexagon	80204	B1821AH025C100N	5305-01-389-7984	2	PAOZZ
12	Nut, Plain, Hexagon	96906	MS35649-2252	5310-00-997-1888	4	PAOZZ
13	Washer, Lock	96906	MS35338-44	5310-00-582-5965	4	PAOZZ
14	Washer, Flat	96906	MS27183-10	5310-00-809-4058	4	PAOZZ
15	Screw, Cap, Hexagon	80204	B1821AH025C100N	5305-01-389-7984	4	PAOZZ
16	Screw, Cap, Hexagon	80204	B1821AH025C175N	5305-01-446-7253	1	PAOZZ
17	Screw, Cap, Hexagon	80204	B1821AH025C250N	5305-00-071-2513	1	PAOZZ
18	Washer, Lock	96906	MS35338-44	5310-00-582-5965	2	PAOZZ
19	Washer, Flat	96906	MS27183-10	5310-00-809-4058	2	PAOZZ
20	Rack, Equipment	0J198	866013-1		1	XBOOO
21	Screw, Cap Hexagon	80204	B1821AH038C225N	5305-01-434-2947	2	PAOZZ
22	Washer, Flat	96906	MS27183-14	5310-00-080-6004	2	PAOZZ
23	Washer, Lock	96906	MS35338-46	5310-00-637-9541	2	PAOZZ
24	Nut, Plain, Hexagon	96906	MS35649-2382	5310-00-056-3395	2	PAOZZ
25	Nut, Plain, Hexagon	96906	MS35649-2252	5310-00-997-1888	4	PAOZZ
26	Washer, Lock	96906	MS35338-44	5310-00-582-5965	4	PAOZZ
27	Washer, Flat	96906	MS27183-10	5310-00-809-4058	4	PAOZZ
28	Label, Warning	0J198	861868-1		1	PAOZZ

L–6.12 REMOVE/REPLACE KEYBOARD UNIT (KU) STOWAGE BOX

Refer to Figure L-11.

L–6.12.1 REMOVE KEYBOARD UNIT (KU) STOWAGE BOX

a. Remove keyboard from stowage box, if stowed.

b. Loosen four KU stowage box captive screws (4) until captive screws move freely using a No. 2 cross-tip screwdriver.

c. Remove KU stowage box (2) from mounting bracket (1).

L–6.12.2 REPLACE KEYBOARD UNIT (KU) STOWAGE BOX

a. Align four KU stowage box captive screws (4) with mounting bracket (1) installation holes.

b. Tighten four captive screws using a No. 2 cross-tip screwdriver.

c. Stow keyboard, if necessary.

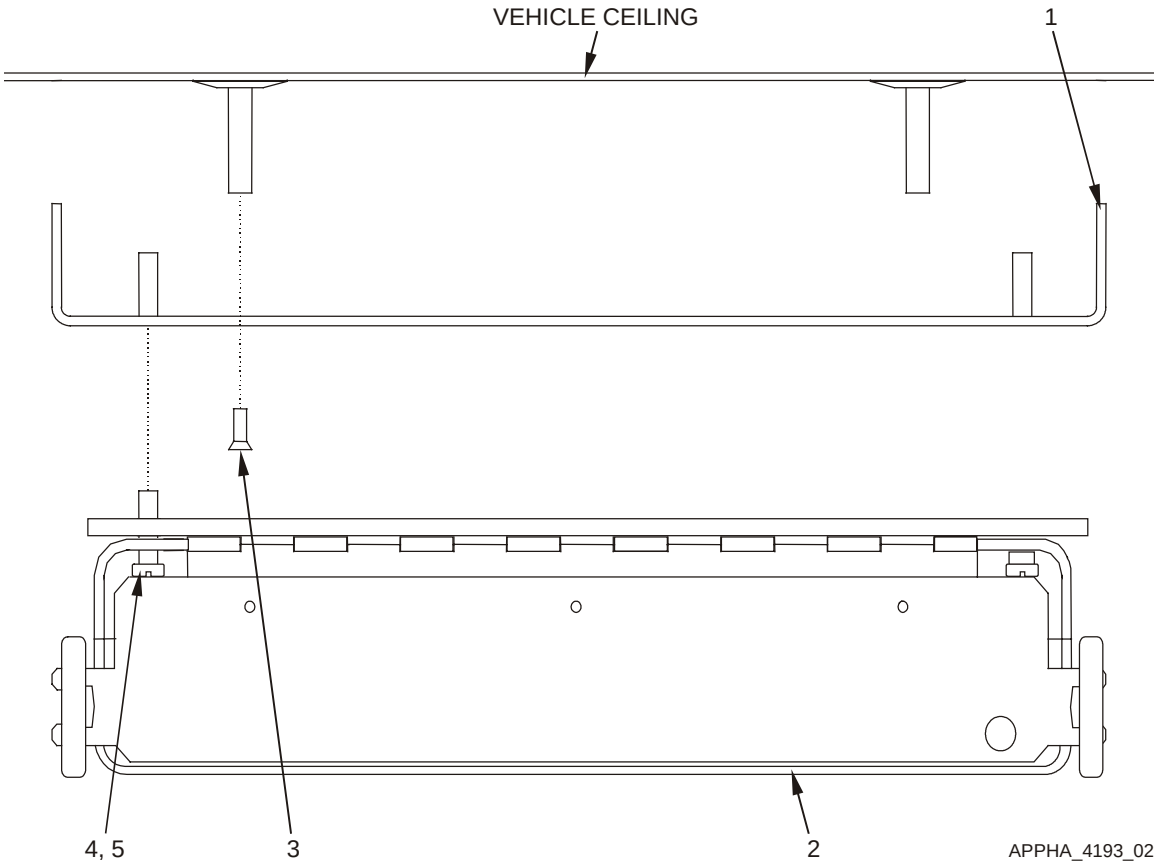

Figure L-11. Remove and Replace Keyboard Unit (KU) Stowage Box

Key and Parts List for Figure L-11

ITEM NO.	NOMENCLATURE	CAGE CODE	PART NUMBER	NSN	QTY	SMR
1	Bracket, Mounting, KU Stowage	0J198	866012-1		1	PAOZZ
2	Box, KU Stowage	0J198	872845-1	2540-01-481-5744	1	PAODD
3	Screw, Flat Head	96906	MS35191-272	5305-01-285-2745	4	PAOZZ
4	Screw, Captive Panel	57177	PH207-05SS1032		4	PAOZZ
5	Retainer, Panel Screw	57177	214-03SS10-32		4	PAOZZ
--	Case, Keyboard	0J198	872845-11		1	XBOOO
--	Bottom, Stowage Box	0J198	872845-12		1	XBOOO
--	Side Rail, Keybd Box	0J198	872845-13		1	XBOOO
--	Side Rail, Keybd Box	0J198	872845-14		1	XBOOO
--	Door, Keyboard Box	0J198	872845-15		1	XBOOO
--	Hinge, Keyboard Box	0J198	872845-16		1	XBOOO
--	Strip, Rubber	0J198	872845-17		1	XBOOO
--	Rivet, Solid, Csk	96906	MS20426AD-4-5	5320-00-117-6950	6	PAOZZ
--	Label, Keyboard Box	0J198	881323-1		1	PAOZZ
--	Screw, Pan Head	96906	MS35206-229	5305-00-984-4989	14	PAOZZ
--	Washer, Flat	96906	MS27183-5	5310-00-983-8483	16	PAOZZ
--	Washer, Lock	96906	MS35338-41	5310-00-045-4007	13	PAOZZ
--	Nut, Plain	96906	MS35649-262	5310-00-934-9747	3	PAOZZ
--	Rubber Edge Trim	39428	8507K16	5325-01-435-2840	9	PAOZZ
--	Adhesive	04963	SCOTCH-GRIP RUB	8040-00-664-4318	1	PAOZZ
--	Grip, Handle Assembly	0J198	861867-1		1	XBOOO
--	Grip, Handle	0J198	861869-1		1	XBOZZ
--	Screw, Machine	96906	MS35206-228	5305-00-984-4988	4	PAOZZ
--	Washer, Lock	96906	MS35338-41	5310-00-045-4007	4	PAOZZ
--	Tape, Shielding, Elect	39428	7648A34		1	XBOZZ

L–6.13 REMOVE/REPLACE KEYBOARD UNIT (KU) STOWAGE BOX DOOR LATCHES

Refer to Figure L-12.

L–6.13.1 REMOVE KEYBOARD UNIT (KU) STOWAGE BOX DOOR LATCHES

a. Pull rubber T-handles and unfasten KU stowage box door latches, if necessary.

b. Remove two pan head screws (1), lock washers (2) and flat washers (3) from each KU stowage box door latch (4) using a No. 2 cross-tip screwdriver.

c. Remove KU stowage box door latch (4).

L–6.13.2 REPLACE KEYBOARD UNIT (KU) STOWAGE BOX DOOR LATCHES

NOTE

The same KU stowage box door latch part is used for each side of the keyboard stowage box. Position bumper on one side of latch so that it is toward the side of the keyboard stowage box when fastened.

a. Align KU stowage box door latch mounting holes with mounting holes in KU stowage box.

b. Install and tighten two pan head screws (1), lock washers (2) and flat washers (3) for each KU stowage box door latch (4), using a No. 2 cross-tip screwdriver.

c. Pull rubber T-handles and fasten KU stowage box door latches.

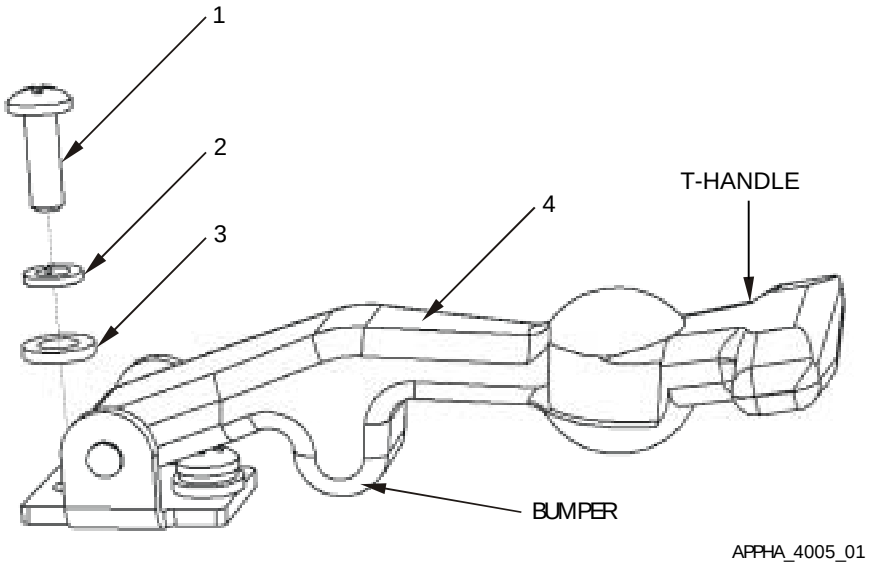

Figure L-12. Remove and Replace Keyboard Unit (KU) Stowage Box Latch

Key and Parts List for Figure L-12

ITEM NO.	NOMENCLATURE	CAGE CODE	PART NUMBER	NSN	QTY	SMR
1	Screw, Pan Head	96906	MS35206-229	5305-00-984-4989	4	PAOZZ
2	Washer, Lock	96906	MS35338-41	5310-00-045-4007	4	PAOZZ
3	Washer, Flat	96906	MS27183-5	5310-00-983-8483	4	PAOZZ
4	(KU stowage box door latch) Latch, Thumb	94222	37-20-071-20	5340-01-351-3340	2	PAOZZ

APPENDIX M

SUPPLEMENTARY INFORMATION FOR

M93A1 FOX

TABLE OF CONTENTS

Page
M–1 GENERAL M–3
M–2 COMPONENT ITEM NUMBERS AND PART NUMBERS M–3
M–3 SYSTEM INTERFACES M–3
M–3.1 MECHANICAL M–3
M–3.2 CABLE INTERFACES M–4
M–4 COMPONENT LOCATION M–6
M–4.1 GENERAL LOCATION M–6
M–4.2 MOUNTING M–6
M–5 PLATFORM-UNIQUE TROUBLESHOOTING M–10
M–6 REMOVAL/REPLACEMENT IN THE PLATFORM M–10
M–6.1 FUNCTIONAL CHECK M–10
M–6.2 REMOVE/REPLACE W1 POWER CABLE M–11
M–6.3 REMOVE/REPLACE W2 DISPLAY CABLE M–12
M–6.4 REMOVE/REPLACE W3 SERIAL INTERFACE ADAPTER DEVICE (SIAD) M–13
M–6.5 REMOVE/REPLACE W3N INC CABLE M–14
M–6.6 REMOVE/REPLACE W3M MICAD CABLE M–15
M–6.7 REMOVE/REPLACE W4 AUDIO CABLE M–16
M–6.8 CABLE ROUTING M–17
M–6.9 REMOVE/REPLACE PU ISOLATION ASSEMBLY M–19
M–6.10 REMOVE/REPLACE DU ISOLATION ASSEMBLY M–23
M–6.11 REMOVE/REPLACE DU BRACKET M–24
M–6.12 REMOVE/REPLACE KEYBOARD UNIT (KU) STOWAGE BOX M–26
M–6.13 REMOVE/REPLACE KEYBOARD UNIT (KU) STOWAGE BOX DOOR LATCHES M–29

LIST OF ILLUSTRATIONS

Page
Figure M-1. Equipment Interface Block Diagram M–5
Figure M-2. Relative Component Location M–6
Figure M-3. PU Mounting M–7
Figure M-4. KU Stowage Box Under-Seat Mounting M–8
Figure M-5. DU Mounting M–9
Figure M-6. Cable Run M–17
Figure M-7. PU/W3 SIAD Cable Run Detail M–18
Figure M-8. Remove and Replace PU Isolation Assembly M–21
Figure M-9. Remove and Replace DU Isolation Assembly and DU Bracket M–25
Figure M-10. Remove and Replace Keyboard Unit (KU) Stowage Box M–27
Figure M-11. Remove and Replace Keyboard Unit (KU) Stowage Box Door Latches M–30

M–1 GENERAL

This appendix describes the interfaces between the FBCB2 equipment and the M93A1 FOX (NBC). This appendix also identifies the component parts of the M93A1 platform installation kit and details the removal and replacement procedures particular to the M93A1 FOX.

M–2 COMPONENT ITEM NUMBERS AND PART NUMBERS

Key and Parts List tables contained in the Removal and Replacement section of this Appendix serve a dual purpose. Use the Item Numbers in the Key to identify components and attaching hardware shown in the Figures illustrating the tasks. The nomenclature and part number for the hardware and equipment mounting components of the installation kit also are keyed to the Item Numbers in the tables. Additional parts ordering information, such as Contractor and Government Entity code (CAGE); National Stock Number (NSN); quantity; and Source, Maintenance and Recoverability (SMR) codes, are provided. The Key and Parts List follow the task illustrations.

M–3 SYSTEM INTERFACES

M–3.1 MECHANICAL

The mechanical hardware-to-hardware interfaces include:

a. Cables

b. Processor Unit (PU)

c. Display Unit (DU)

d. Keyboard Unit (KU)

M–3.2 CABLE INTERFACES

Figure M-1 illustrates a block diagram of the interface between FBCB2 equipment and the M93A1 FOX (Platform). Figure M-1 also illustrates the signal and control interfaces along with the terminal connector labels (e.g., P1, P2). The purpose of each cable is listed below:

Cable Name	Purpose
W1–Cable	Supplies vehicle power (28 VDC) to the AN/UYK-128(V) computer and its subassemblies.
W2–Cable	Supplies power and signals to the Display Unit (DU) and Keyboard Unit (KU). Returns Man Machine Interface (MMI) information from the KU to the Processor Unit (PU).
W3–Cable	The Serial Interface Adapter Device (SIAD) is a conduit assembly that breaks out each of the serial interface ports to a connector.
PLGR/ANAV	A Government Furnished Equipment (GFE) cable from the combined PLGR/ANAV device, which provides position and time data.
W3N–Cable	Provides duplex communication between the PU, Internet Controller (INC) and radios.
W3M–Cable	Connect to the Multiple Integrated Chemical Agent Detector (MICAD). Supplies chemical agent information to the local and distant computers.
W4–Cable	Connects audio signals from the PU to the Intercom system and Combat Vehicle Crew (CVC) Helmet.
Ground Strap	Provides safety ground for the PU.
Ground Strap	Provides safety ground for the DU.

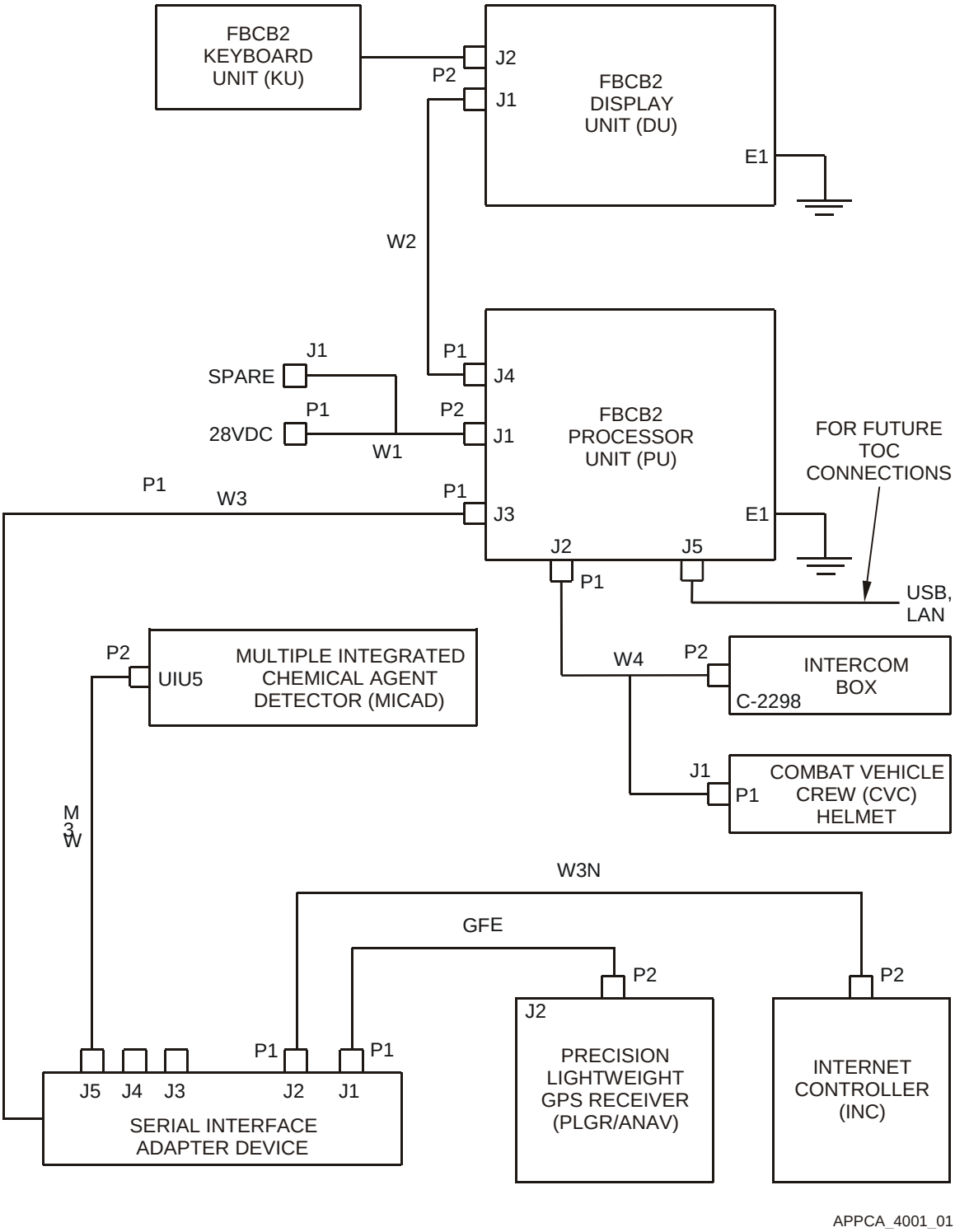

Figure M-1. Equipment Interface Block Diagram

M–4 COMPONENT LOCATION

M–4.1 GENERAL LOCATION

Figure M-2 shows the relative locations of the FBCB2 computer equipment and mounting components in the M93A1 FOX vehicle.

M–4.2 MOUNTING

A PLGR/ANAV device is located between the driver and passenger, with the DU mounted to the right of the passenger. The KU stowage box is mounted under the passenger seat. The PU is located behind the cab in the aft operations area.

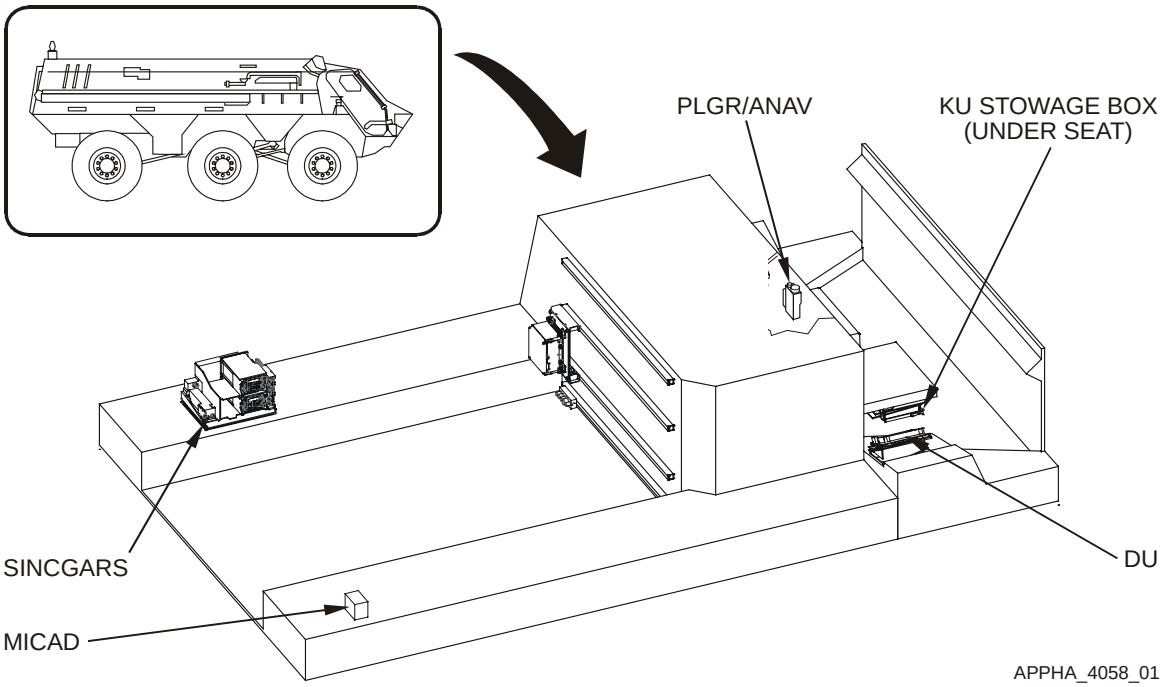

Figure M-2. Relative Component Location

M–4.2.1 PU MOUNTING

Figure M-3 illustrates the mounting of the PU without cables. The forward wall of the rear bed has existing equipment-mounting rails. The PU bracket provides a mechanical interface to the mounting rails. The W3 SIAD is installed below the PU. The W3 SIAD must be protected from damage and is secured in place with tie-wraps.

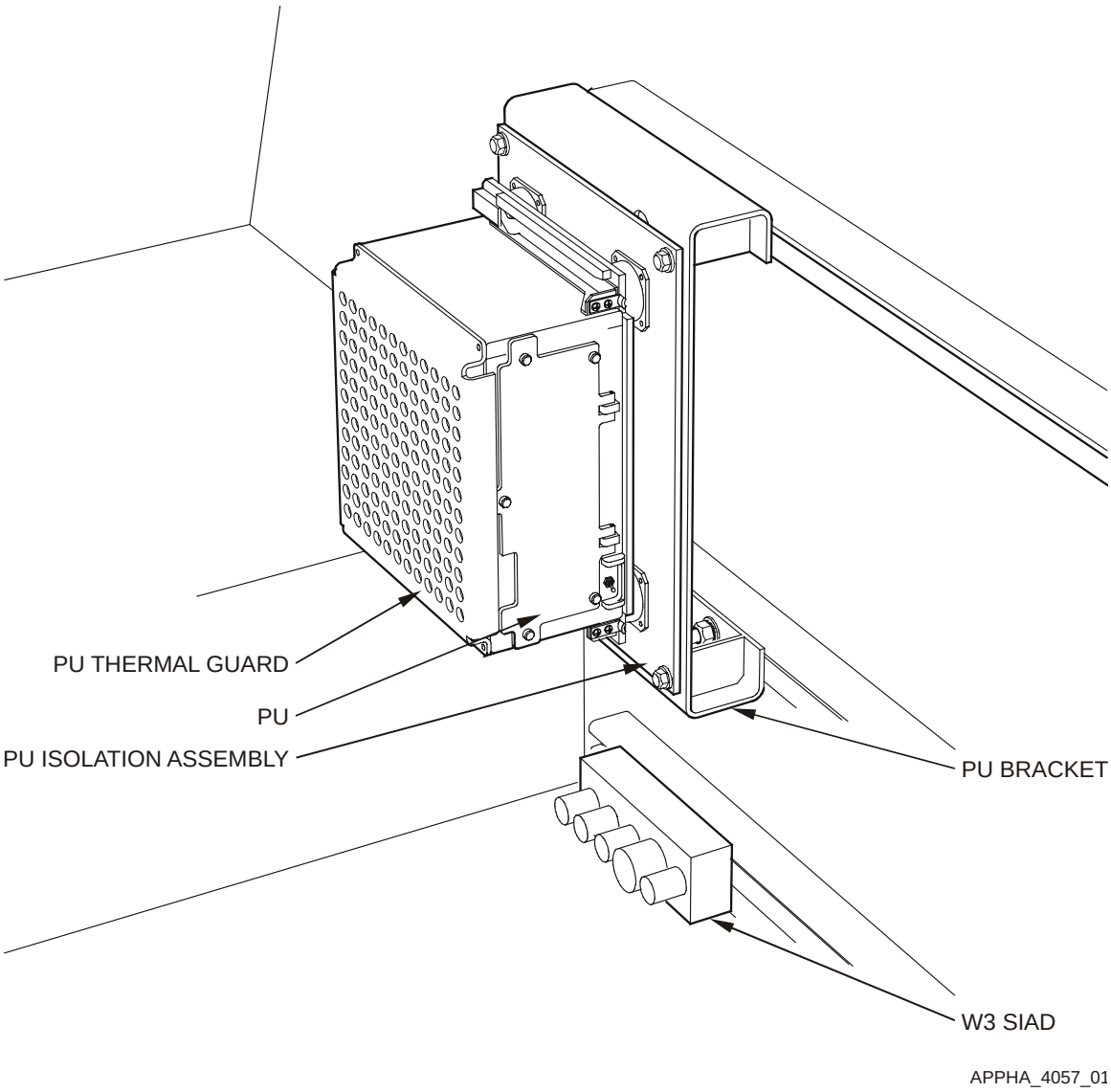

Figure M-3. PU Mounting

M–4.2.2 KU STOWAGE BOX MOUNTING

The KU stowage box is mounted under the front passenger seat.

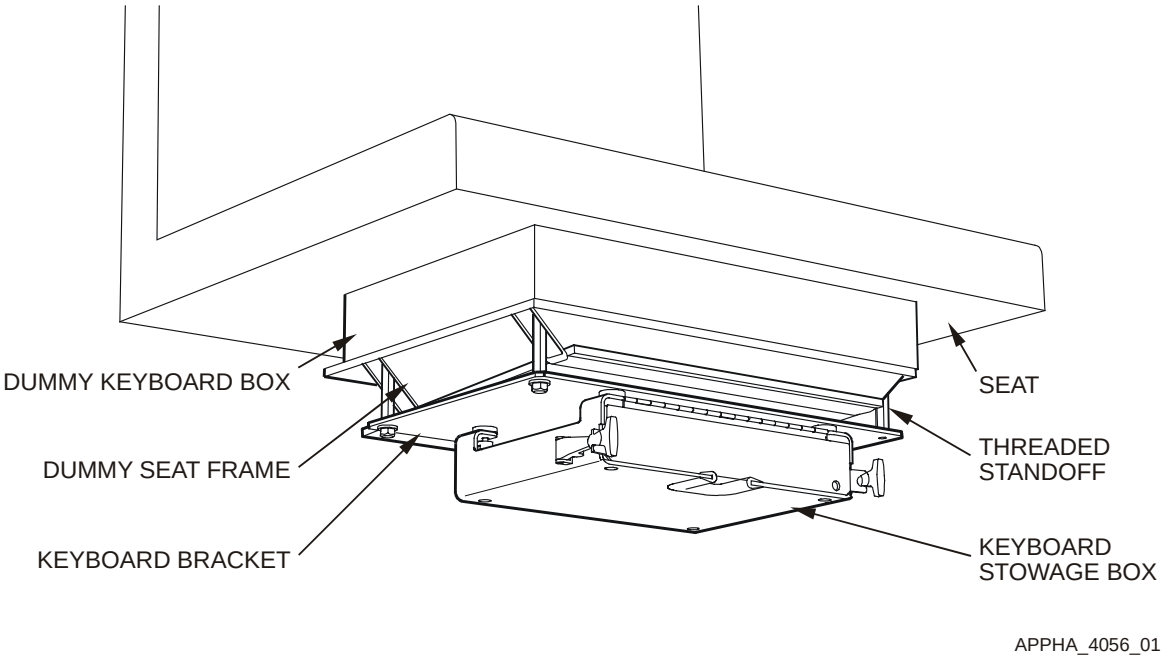

Figure M-4. KU Stowage Box Under-Seat Mounting

M–4.2.3 DU MOUNTING

The DU is mounted to the right of the front passenger seat. A display bracket provides optimum viewing angle.

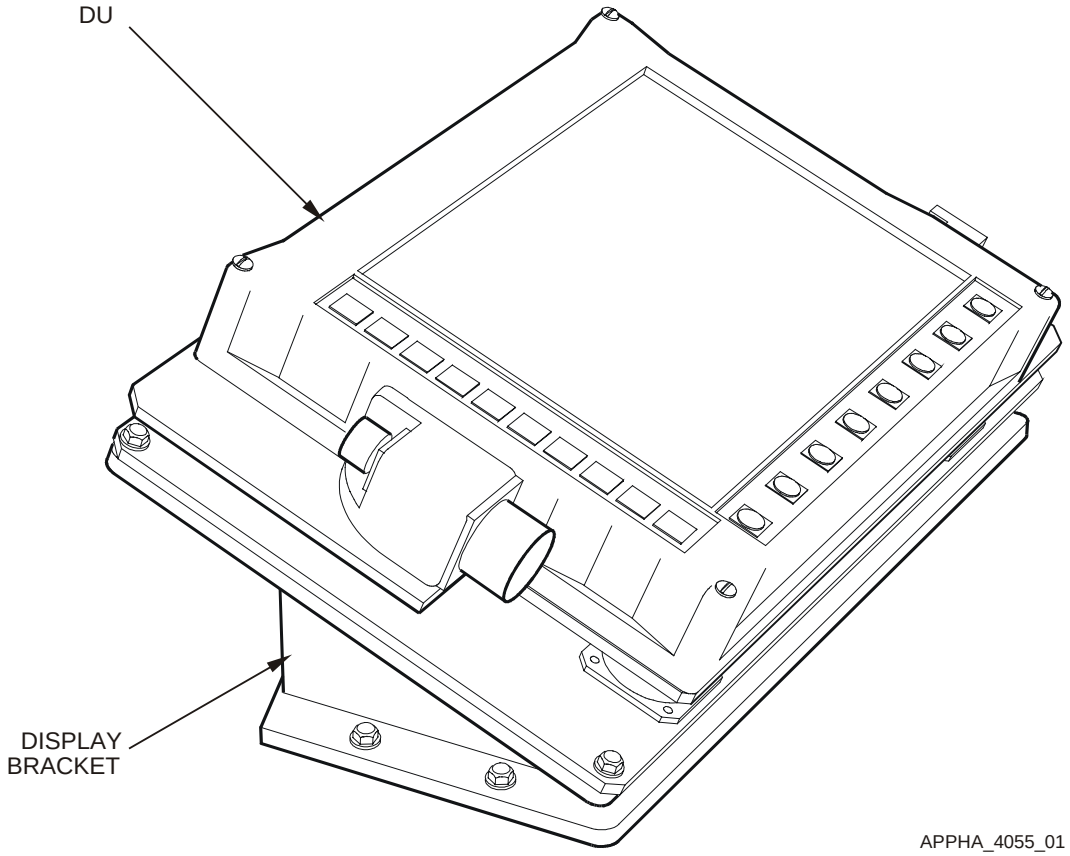

Figure M-5. DU Mounting

M–5 PLATFORM-UNIQUE TROUBLESHOOTING

There are no unique troubleshooting procedures for this vehicle.

M–6 REMOVAL/REPLACEMENT IN THE PLATFORM

Most installations must be tailored to the platform. Cables and brackets are unique to the installation. Before a part or assembly is removed from a vehicle, fill out a “Maintenance Request” DA Form 2407. One copy of this completed form must remain with the vehicle and the remaining copies must be kept with the failed component. To prove the operability of the system after an item is replaced, perform the system Functional Check.

M–6.1 FUNCTIONAL CHECK

M–6.1.1 POWER UP

Power up and initialize all interface equipment and the AN/UYK-128(V) In Accordance With (IAW) the Operator’s Manual TM 11-7010-326-10, or Pocket Guide TB 11-7010-326-10.

M–6.1.2 VERIFICATION

NOTE

Observe that the Display Unit PWR, DISP and CPU green LED lights are lit.

a. Observe that the PLGR synchronizes with PU, indicated by the PLGR dialog box showing green.

b. Observe that the Router synchronizes with the PU, indicated by the Router dialog box showing green.

c. At the Session Manager screen, select OPS button to display the OPS screen.

d. Verify the GPS status is either green or amber on the Classification/Status Bar.

e. Verify the Communications status is either green or amber on the Classification/Status Bar.

M–6.1.3 POWER DOWN

Power down all interface equipment and the AN/UYK-128(V) IAW the Operator’s Manual TM 11-7010-326-10, or Pocket Guide TB 11-7010-326-10.

M–6.2 REMOVE/REPLACE W1 POWER CABLE

Refer to Figure M-6 and Figure M-7.

M–6.2.1 REMOVE W1 POWER CABLE

WARNING

Before conducting maintenance involving the removal and replacement of system components, ensure that all power to the FBCB2 system is off (including power from the vehicle). Failure to comply with warning may result in equipment damage or injury to personnel.

a. Power down AN/UYK-128(V) system IAW Operator's Manual TM 11-7010-326-10, or Pocket Guide TB 11-7010-326-10.

b. Power down SINCGARS IAW TM 5820-890-10-8.

c. Disconnect W1-P1 cable connector from the SINCGARS Mounting Base (MB) (MT-6352/VRC) A4-J2 connector.

d. Disconnect W1-P2 cable connector from PU J1 connector.

e. Install protective cap on PU J1 connector.

NOTE

Note cable routing and tie-wrap locations before removing cable or tie-wraps.

f. Remove tie-wraps securing W1 cable using diagonal wire cutters.

g. Remove W1 power cable (4).

M–6.2.2 REPLACE W1 POWER CABLE

a. Route W1power cable (4).

b. Remove protective cap from PU J1 connector.

c. Connect W1-P2 cable connector to PU J1 connector.

d. Connect W1-P1 cable connector to SINCGARS Mounting Base (MB) (MT-6352/VRC) A4-J2 connector.

e. Secure W1 cable using tie-wraps.

f. Dress tie-wraps using diagonal wire cutters.

g. Perform Functional Check IAW paragraph M–6.1.

M–6.3 REMOVE/REPLACE W2 DISPLAY CABLE

Refer to Figure M-6 and Figure M-7.

M–6.3.1 REMOVE W2 DISPLAY CABLE

WARNING

Before conducting maintenance involving the removal and replacement of system components, ensure that all power to the FBCB2 system is off (including power from the vehicle). Failure to comply with warning may result in equipment damage or injury to personnel.

a. Power down AN/UYK-128(V) system IAW Operator's Manual TM 11-7010-326-10, or Pocket Guide TB 11-7010-326-10.

b. Disconnect W2-P1 cable connector from PU J4 connector.

c. Install protective cap on PU J4 connector.

d. Disconnect W2-P2 cable connector from display J1 connector.

e. Install protective cap on display J1 connector.

NOTE

Note cable routing and tie-wrap locations before removing cable or tie-wraps.

f. Remove tie-wraps securing W2 cable using diagonal wire cutters.

g. Remove W2 display cable (2).

M–6.3.2 REPLACE W2 DISPLAY CABLE

a. Route W2 display cable (2) from rear to front.

b. Remove protective cap from display J1 connector.

c. Connect W2-P2 cable connector to display J1 connector.

d. Remove protective cap from PU J4 connector.

e. Connect W2-P1 cable connector to PU J4 connector.

f. Secure W2 cable using tie-wraps.

g. Dress tie-wraps using diagonal wire cutters.

h. Perform Functional Check IAW paragraph M–6.1.

M–6.4 REMOVE/REPLACE W3 SERIAL INTERFACE ADAPTER DEVICE (SIAD)

Refer to Figure M-6 and Figure M-7.

M–6.4.1 REMOVE W3 SERIAL INTERFACE ADAPTER DEVICE (SIAD)

WARNING

Before conducting maintenance involving the removal and replacement of system components, ensure that all power to the FBCB2 system is off (including power from the vehicle). Failure to comply with warning may result in equipment damage or injury to personnel.

a. Power down AN/UYK-128(V) system IAW Operator's Manual TM 11-7010-326-10, or Pocket Guide TB 11-7010-326-10.

b. Disconnect W3N-P1 cable connector from W3 SIAD J1 connector.

c. Disconnect GFE PLGR/ANAV-P1 cable connector from W3 SIAD J2 connector.

d. Disconnect W3M-P1 MICAD cable connector from W3 SIAD J5 connector.

e. Install protective cap on W3 SIAD J5 connector.

f. Disconnect W3 SIAD-P1 cable connector from PU J3 connector.

g. Install protective cap on PU J3 connector.

NOTE

Note cable routing and tie-wrap locations before removing cable or tie-wraps.

h. Remove tie-wraps securing W3 SIAD using diagonal wire cutters.

i. Remove W3 SIAD (6).

M–6.4.2 REPLACE W3 SERIAL INTERFACE ADAPTER DEVICE (SIAD)

a. Route W3 SIAD (6) into original position.

b. Remove protective cap from PU J3 connector.

c. Connect W3 SIAD-P1 cable connector to PU J3 connector.

d. Remove protective cap from W3 SIAD J5 connector.

e. Connect W3M-P1 MICAD cable connector to W3 SIAD J5 connector.

f. Connect GFE PLGR/ANAV-P1 cable connector to W3 SIAD J2 connector.

g. Connect W3N-P1 cable connector to W3 SIAD J1 connector.

NOTE

The W3 SIAD must be protected from damage and secured with tie-wraps.

h. Secure W3 SIAD using tie-wraps.

i. Dress tie-wraps using diagonal wire cutters.

j. Perform Functional Check IAW paragraph M–6.1.

M–6.5 REMOVE/REPLACE W3N INC CABLE

Refer to Figure M-6 and Figure M-7.

M–6.5.1 REMOVE W3N INC CABLE

WARNING

Before conducting maintenance involving the removal and replacement of system components, ensure that all power to the FBCB2 system is off (including power from the vehicle). Failure to comply with warning may result in equipment damage or injury to personnel.

a. Power down AN/UYK-128(V) system IAW Operator's Manual TM 11-7010-326-10, or Pocket Guide TB 11-7010-326-10.

b. Disconnect W3N-P1 cable connector from W3 SIAD J1 connector.

c. Disconnect W3N-P2 cable connector from SINCGARS INC J6 connector.

NOTE

Note cable routing and tie-wrap locations before removing cable or tie-wraps.

a. Remove tie-wraps securing W3N cable using diagonal cutters.

b. Remove W3N cable (5).

M–6.5.2 REPLACE W3N INC CABLE

a. Route W3N cable (5).

b. Connect W3N-P2 cable connector to SINCGARS INC J6 connector.

c. Connect W3N-P1 cable connector to W3 SIAD J1 connector.

d. Secure W3N cable using tie-wraps.

e. Dress tie-wraps using diagonal wire cutters.

f. Perform Functional Check IAW paragraph M–6.1.

M–6.6 REMOVE/REPLACE W3M MICAD CABLE

Refer to Figure M-6 and Figure M-7.

M–6.6.1 REMOVE W3M MICAD CABLE

WARNING

Before conducting maintenance involving the removal and replacement of system components, ensure that all power to the FBCB2 system is off (including power from the vehicle). Failure to comply with warning may result in equipment damage or injury to personnel.

a. Power down AN/UYK-128(V) system IAW Operator's Manual TM 11-7010-326-10, or Pocket Guide TB 11-7010-326-10.

b. Disconnect W3M-P1 cable connector from W3 SIAD J5 connector.

c. Install protective cap on W3 SIAD J5 connector.

d. Disconnect W3M-P2 cable connector from MICAD UIU5 connector.

NOTE

Note cable routing and tie-wrap locations before removing cable or tie-wraps.

c. Remove tie-wraps securing W3M cable using diagonal cutters.

d. Remove W3M cable (3).

M–6.6.2 REPLACE W3M MICAD CABLE

a. Route W3M cable (3) to rear curbside corner of vehicle.

b. Remove protective cap from W3 SIAD J5 connector.

c. Connect W3M-P1 cable connector to W3 SIAD J5 connector.

d. Connect W3M-P2 cable connector to MICAD UIU5 connector.

e. Secure W3M cable using tie-wraps.

f. Dress tie-wraps using diagonal wire cutters.

g. Perform Functional Check IAW paragraph M–6.1.

M–6.7 REMOVE/REPLACE W4 AUDIO CABLE

Refer to Figure M-6 and Figure M-7.

M–6.7.1 REMOVE W4 AUDIO CABLE

WARNING

Before conducting maintenance involving the removal and replacement of system components, ensure that all power to the FBCB2 system is off (including power from the vehicle). Failure to comply with warning may result in equipment damage or injury to personnel.

a. Power down AN/UYK-128(V) system IAW Operator's Manual TM 11-7010-326-10, or Pocket Guide TB 11-7010-326-10.

b. Disconnect W4-P1 cable connector from PU J2 connector.

c. Install protective cap on PU J2 connector.

d. Disconnect W4-P2 cable connector from Intercom Box C-2298 connector.

e. Disconnect W4-J1 cable connector from Combat Vehicle Crew (CVC) helmet P1 connector.

NOTE

Note cable routing and tie-wrap locations before removing cable or tie-wraps.

e. Remove tie-wraps securing W4 cable using diagonal wire cutters.

f. Remove W4 audio cable (1).

M–6.7.2 REPLACE W4 AUDIO CABLE

a. Route W4 audio cable (1).

b. Connect W4-J1 cable connector to CVC helmet P1 connector.

c. Connect W4-P2 cable connector to Intercom Box C-2298 connector.

d. Remove protective cap from PU J2 connector.

e. Connect W4-P1 cable connector to PU J2 connector.

f. Secure W4 cable using tie-wraps.

g. Dress tie-wraps using diagonal wire cutters.

h. Perform Functional Check IAW paragraph M–6.1.

M–6.8 CABLE ROUTING

Figure M-6 illustrates cable routing in the M93A1 Fox. Due to space limitations and the long length of the cables, the cable layout in the M93A1 platform is critical and must be followed as closely as possible. When removing or replacing a long cable, it is important to note the cable routing and work from one end to the other. Note that this vehicle is equipped with a PLGR/ANAV “listen only” device instead of the PLGR found in other FBCB2 installations. The cable for this navigation unit is GFE. Therefore, no removal and replacement task instructions are provided. Figure M-7 shows the cable connections at the PU and W3 SIAD in the mid-section of the vehicle.

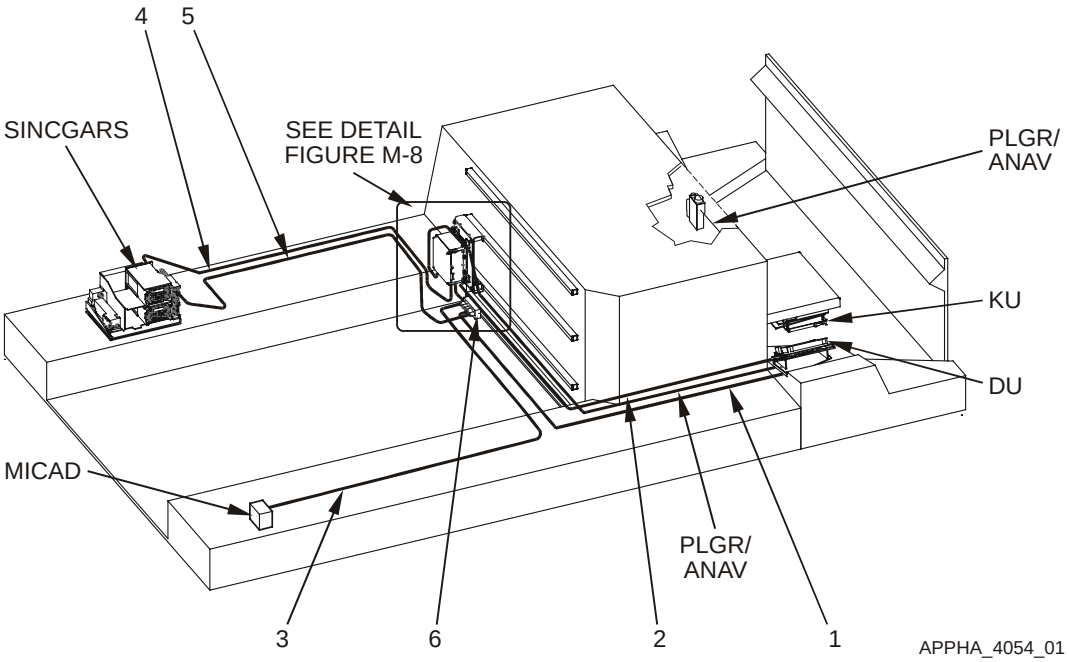

Figure M-6. Cable Run

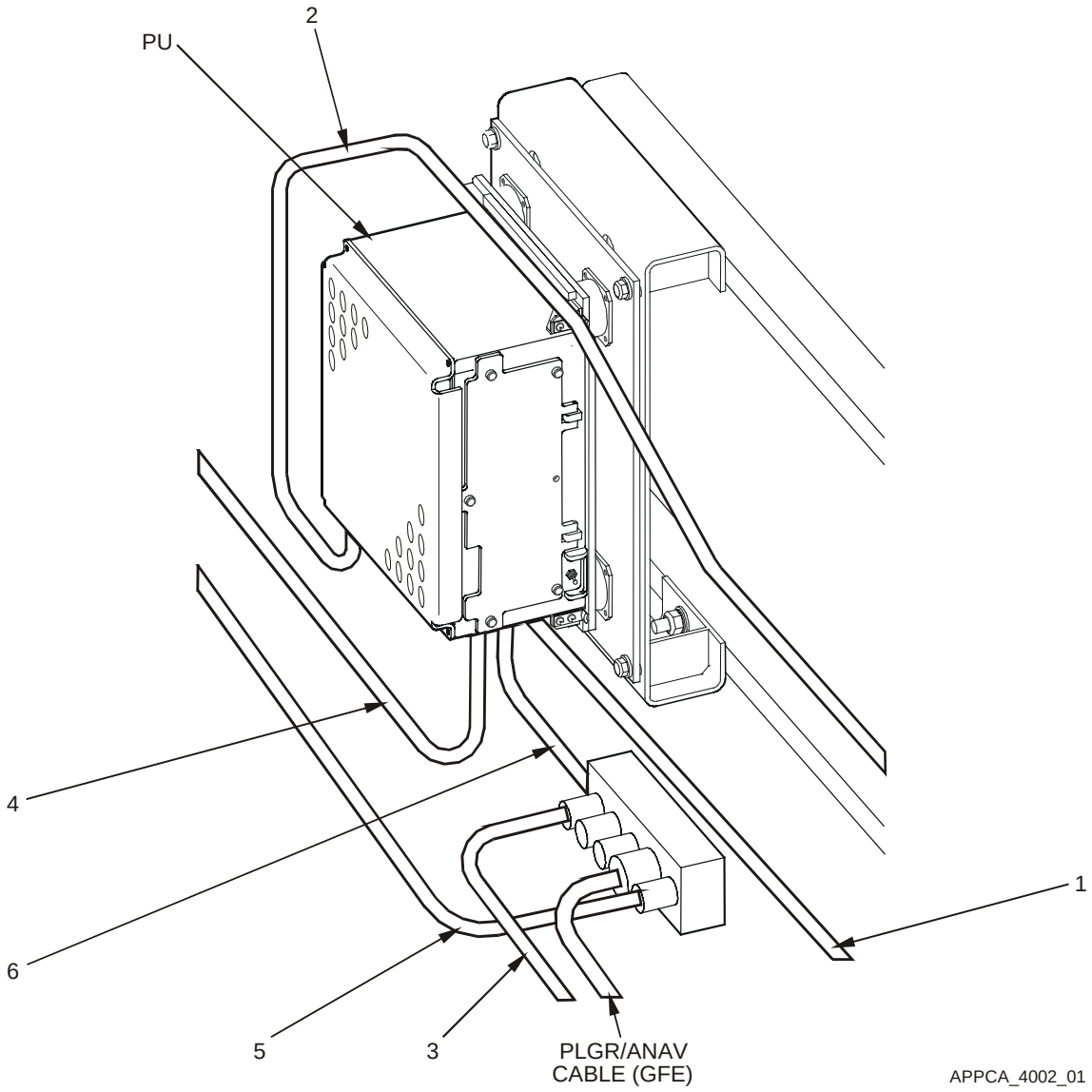

Figure M-7. PU/W3 SIAD Cable Run Detail

Key and Parts List for Figure M-6 and Figure M-7

ITEM NO.	NOMENCLATURE	CAGE CODE	PART NUMBER	NSN	QTY	SMR
1	Cable Assembly W4	0J198	881270-3	5995-01-478-4934	1	PAODD
2	Cable Assembly W2	0J198	881327-4	5995-01-478-4880	1	PAODD
3	Cable Assembly W3M	0J198	881333-1	5995-01-478-4895	1	PAODD
4	Cable Assembly W1	0J198	861880-1	5995-01-478-4776	1	PAODD
5	Cable Assembly W3N	0J198	881336-3	5995-01-478-5080	1	PAODD
6	Adapter Assy SIAD W3	0J198	881331-1	4920-01-478-3722	1	PAODD
--	Strap, Tie Down, Elect	39428	7130K31		50	PAOZZ
--	Holder, Cable, Tie 2w	39428	7566K27		25	PAOZZ

M–6.9 REMOVE/REPLACE PU ISOLATION ASSEMBLY

Refer to Figure M-8.

NOTE

Ground straps are attached to components at one end (PU and DU) and a frame ground at the other end. Regardless of where the ground strap terminates, it is usually a burnished (void of paint) area. If the ground strap is removed from a burnished area make sure to return it to the same burnished area. Where applicable, always connect the ground strap first when assembling, and disconnect the ground strap last when disassembling.

M–6.9.1 REMOVE PU ISOLATION ASSEMBLY

WARNING

Before conducting maintenance involving the removal and replacement of system components, ensure that all power to the FBCB2 system is off (including power from the vehicle). Failure to comply with warning may result in equipment damage or injury to personnel.

a. Power down AN/UYK-128(V) system IAW Operator's Manual TM 11-7010-326-10, or Pocket Guide TB 11-7010-326-10.

NOTE

Do not remove the Removable Hard Disk Drive Cartridge (RHDDC), locking bracket, or thermal guard (if installed) from PU.

b. Remove PU IAW Unit Maintenance Manual TM 11-7010-326-20&P, Chapter 2.

c. Remove one hex head screw (6), flat washer (7), ground strap, lock washer (8) and hex nut (9) from PU isolation assembly (5) bottom plate and PU bracket (10) using a 7/16" socket with ratchet, 3" extension and 7/16" open-end wrench.

d. Remove remaining three hex head screws (6), flat washers (7), lock washers (8) and hex nuts (9) from PU isolation assembly (5) bottom plate and PU bracket (10) using a 7/16" socket with ratchet, 3" extension and 7/16" open-end wrench.

e. Remove PU isolation assembly (5) from PU bracket (10).

M–6.9.2 REPLACE PU ISOLATION ASSEMBLY

a. Align four PU isolation assembly (5) bottom plate holes with PU bracket (10) installation holes.

NOTE

To ensure positive ground, PU ground strap must make direct contact with bare metal. Ensure PU ground strap is installed in its original location at the PU isolation assembly bottom plate mounting hole. Slip the flat washer and then the ground strap on the mounting screw before installing in installation hole.

b. Install one hex head screw (6), flat washer (7), ground strap, lock washer (8) and hex nut (9) on PU isolation assembly (5) bottom plate and PU bracket (10) using a 7/16” socket with ratchet, 3” extension and 7/16” open-end wrench.

c. Install remaining three hex head screws (6), flat washers (7), lock washers (8) and hex nuts (9) on PU isolation assembly (5) bottom plate and PU bracket (10) using a 7/16” socket with ratchet, 3” extension and 7/16” open-end wrench.

d. Install PU IAW Unit Maintenance Manual TM 11-7010-326-20&P, Chapter 2.

e. Perform Functional Check IAW paragraph M–6.1.

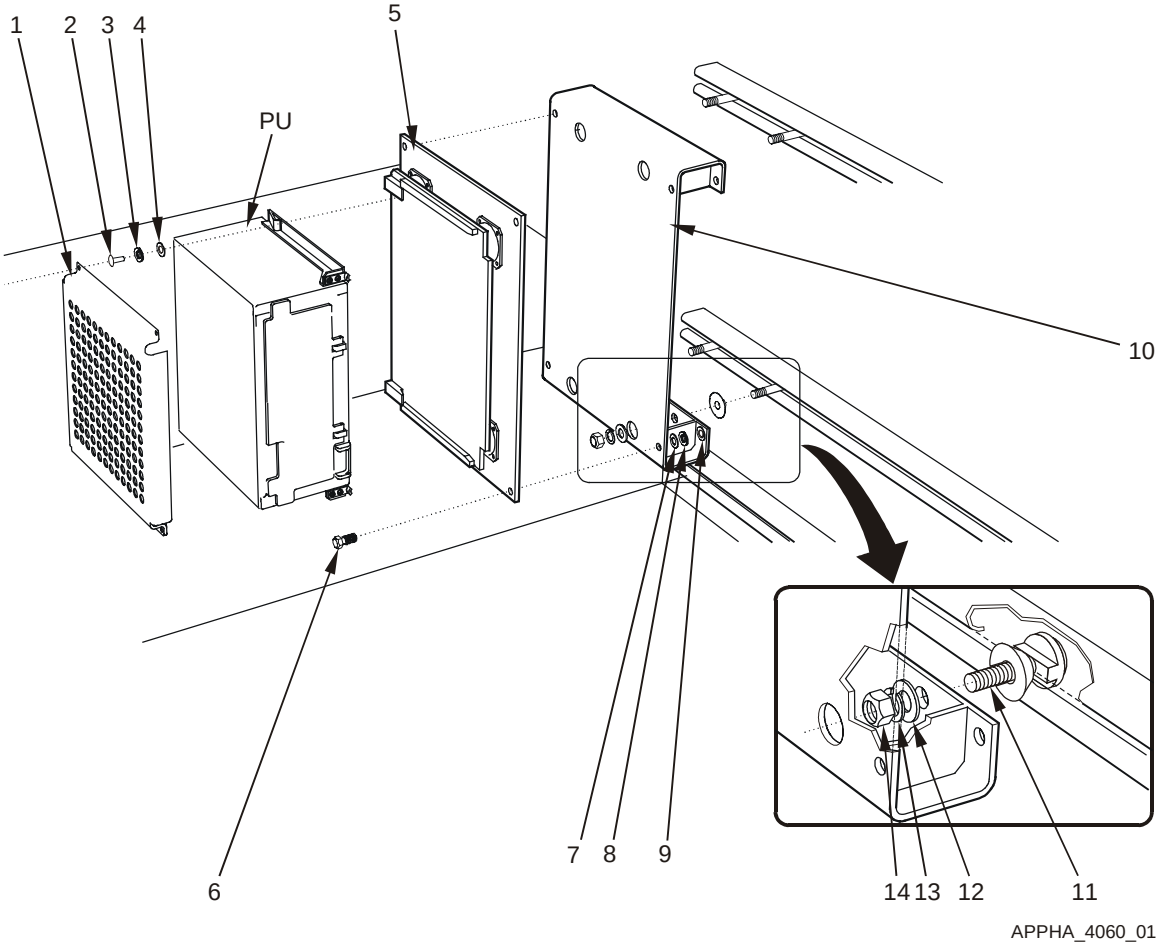

Figure M-8. Remove and Replace PU Isolation Assembly

Key and Parts List for Figure M-8

ITEM NO.	NOMENCLATURE	CAGE CODE	PART NUMBER	NSN	QTY	SMR
--	Thermal Guard Assy (if installed)	0J198	872860-1		1	XBOOO
1	Thermal Guard	0J198	872860-11		1	PAOZZ
2	Screw, Machine	96906	MS51958-63	5305-00-059-3659	4	PAOZZ
3	Grommet	63590	BG2903	5325-01-291-3383	4	PAOZZ
4	Retainer, Bolt	032U6	75-4119		4	PAOZZ
5	(PU isolation assembly) Plate, Resilient Mount PU	0J198	872826-1	5340-01-481-5742	1	PAODD
6	Screw, Cap, Hexagon	80204	B1821AH025C100N	5305-01-389-7984	4	PAOZZ
7	Washer, Flat	96906	MS27183-10	5310-00-809-4058	4	PAOZZ
8	Washer, Lock	96906	MS35338-44	5310-00-582-5965	4	PAOZZ
9	Nut, Plain, Hexagon	96906	MS35649-2252	5310-00-997-1888	4	PAOZZ
10	Bracket, PU	0J198	872849-1		1	XBOOO
11	Tee Bolt	D9477	VG9561CM8X35		4	PAOZZ
12	Washer, Flat	96906	MS27183-55	5310-01-312-4960	4	PAOZZ
13	Washer, Lock	96906	MS35338-46	5310-00-637-9541	4	PAOZZ
14	Nut	39428	90592A022		4	PAOZZ
--	Assembly, PU Lock	0J198	861865-1		1	XBOOO
--	Bracket, Locking	0J198	861871-1		1	XBOZZ
--	Screw	80205	MS35190-253	5305-00-059-4568	2	PAOZZ

M–6.10 REMOVE/REPLACE DU ISOLATION ASSEMBLY

Refer to Figure M-9.

NOTE

Ground straps are attached to components at one end (PU and DU) and a frame ground at the other end. Regardless of where the ground strap terminates, it is usually a burnished (void of paint) area. If the ground strap is removed from a burnished area make sure to return it to the same burnished area. Where applicable, always connect the ground strap first when assembling, and disconnect the ground strap last when disassembling.

M–6.10.1 REMOVE DU ISOLATION ASSEMBLY

WARNING

Before conducting maintenance involving the removal and replacement of system components, ensure that all power to the FBCB2 system is off (including power from the vehicle). Failure to comply with warning may result in equipment damage or injury to personnel.

a. Power down AN/UYK-128(V) system IAW Operator's Manual TM 11-7010-326-10, or Pocket Guide TB 11-7010-326-10.

b. Remove DU IAW Unit Maintenance Manual TM 11-7010-326-20&P, Chapter 2.

NOTE

Note cable routing and tie-wrap locations before removing cable or tie-wraps.

c. Remove tie-wraps securing W2 display cable and ground strap to DU isolation assembly using diagonal wire cutters.

d. Remove four hex head screws (2), lock washers (3), flat washers (4) and hex nuts (5) from DU isolation assembly (1) bottom plate and DU bracket (6) using a 7/16" socket with ratchet and a 7/16" open-end wrench.

e. Remove DU isolation assembly (1) from DU bracket (6).

M–6.10.2 REPLACE DU ISOLATION ASSEMBLY

a. Align four DU isolation assembly (1) bottom plate holes with DU bracket (6) installation holes.

b. Install four hex head screws (2), lock washers (3), flat washers (4) and hex nuts (5) on DU isolation assembly (1) bottom plate and DU bracket (6) using a 7/16” socket with ratchet and a 7/16” open-end wrench.

c. Secure W2 display cable and ground strap to DU isolation assembly (1) bottom plate using tie-wraps.

d. Dress tie-wrap using diagonal wire cutters.

e. Install DU IAW Unit Maintenance Manual TM 11-7010-326-20&P, Chapter 2.

f. Perform Functional Check IAW paragraph M–6.1.

M–6.11 REMOVE/REPLACE DU BRACKET

Refer to Figure M-9.

M–6.11.1 REMOVE DU BRACKET

a. Remove DU isolation assembly (1) from DU bracket (6) IAW paragraph M–6.10.1.

b. Remove four hex head screws (8), lock washers (3) and flat washers (4) from DU bracket (6) and rivet nuts on vehicle using a 7/16” socket with ratchet.

c. Remove DU bracket (6).

M–6.11.2 REPLACE DU BRACKET

a. Align four holes in DU bracket (6) with rivet nuts on vehicle.

b. Install four hex head screws (8), lock washers (3) and flat washers (4) on DU bracket (6) and rivet nuts on vehicle using a 7/16” socket with ratchet.

c. Install display isolation assembly IAW paragraph M–6.10.2.

d. Perform Functional Check IAW paragraph M–6.1.

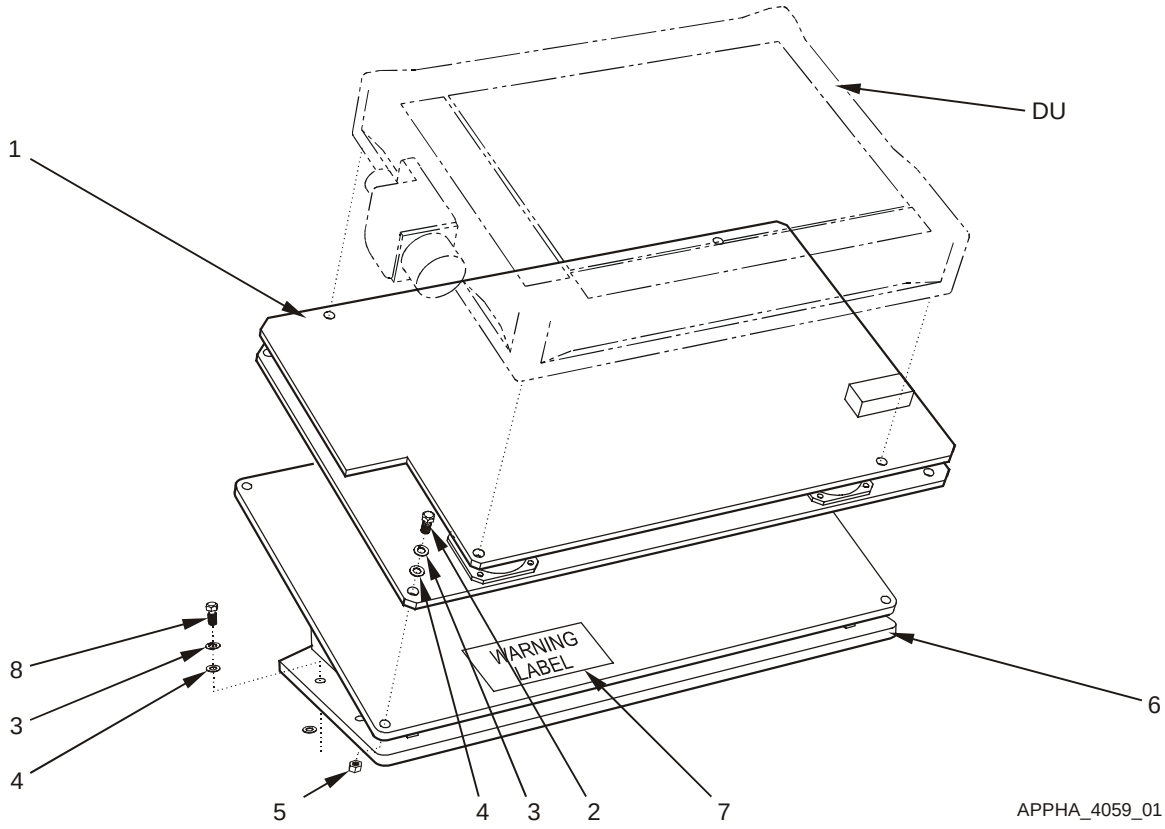

Figure M-9. Remove and Replace DU Isolation Assembly and DU Bracket

Key and Parts List for Figure M-9

ITEM NO.	NOMENCLATURE	CAGE CODE	PART NUMBER	NSN	QTY	SMR
1	(DU isolation assembly) Plate, Resilient Mount DU	0J198	872870-2		1	PAODD
2	Screw, Cap, Hexagon	80204	B1821AH025C100N	5305-01-389-7984	4	PAOZZ
3	Washer, Lock	96906	MS35338-44	5310-00-582-5965	8	PAOZZ
4	Washer, Flat	96906	MS27183-10	5310-00-809-4058	8	PAOZZ
5	Nut, Plain, Hexagon	96906	MS35649-2252	5310-00-997-1888	4	PAOZZ
6	Bracket, Display (DU)	0J198	881338-1		1	XBOZZ
7	Label, Warning	0J198	881322-1		1	PAOZZ
8	Screw, Cap, Hexagon	80204	B1821AH025C075N	5305-01-389-8000	4	PAOZZ
--	Assembly, DU Lock	0J198	872843-1		1	XBOOO
--	Bracket, Locking	0J198	861871-3		1	XBOZZ
--	Screw	80205	MS35190-253	5305-00-059-4568	2	PAOZZ
--	Washer, Lock	96906	MS35338-42	5310-00-045-3299	2	PAOZZ

M–6.12 REMOVE/REPLACE KEYBOARD UNIT (KU) STOWAGE BOX

Refer to Figure M-10.

M–6.12.1 REMOVE KEYBOARD UNIT (KU) STOWAGE BOX

a. Remove keyboard from stowage box, if stowed.

b. Remove four hex head screws (9), lock washers (3) and flat washers (2) from keyboard bracket (4) and threaded standoffs (10) under seat using a 7/16” socket and ratchet.

c. Remove keyboard bracket (4) with KU stowage box (6) attached from threaded standoffs (10).

d. Loosen four KU stowage box captive screws (7) until captive screws move freely using a No. 2 cross-tip screwdriver.

e. Remove KU stowage box (6) from keyboard bracket (4).

M–6.12.2 REPLACE KEYBOARD UNIT (KU) STOWAGE BOX

a. Align four KU stowage box captive screws (7) with keyboard bracket (4) installation holes.

b. Tighten four captive screws using a No. 2 cross-tip screwdriver.

c. Align four keyboard bracket (4) holes with threaded standoffs (10) under seat.

d. Install four hex head screws (9), lock washers (3) and flat washers (2) on keyboard bracket (4) and threaded standoffs (10) using a 7/16” socket and ratchet.

e. Stow keyboard, if necessary.

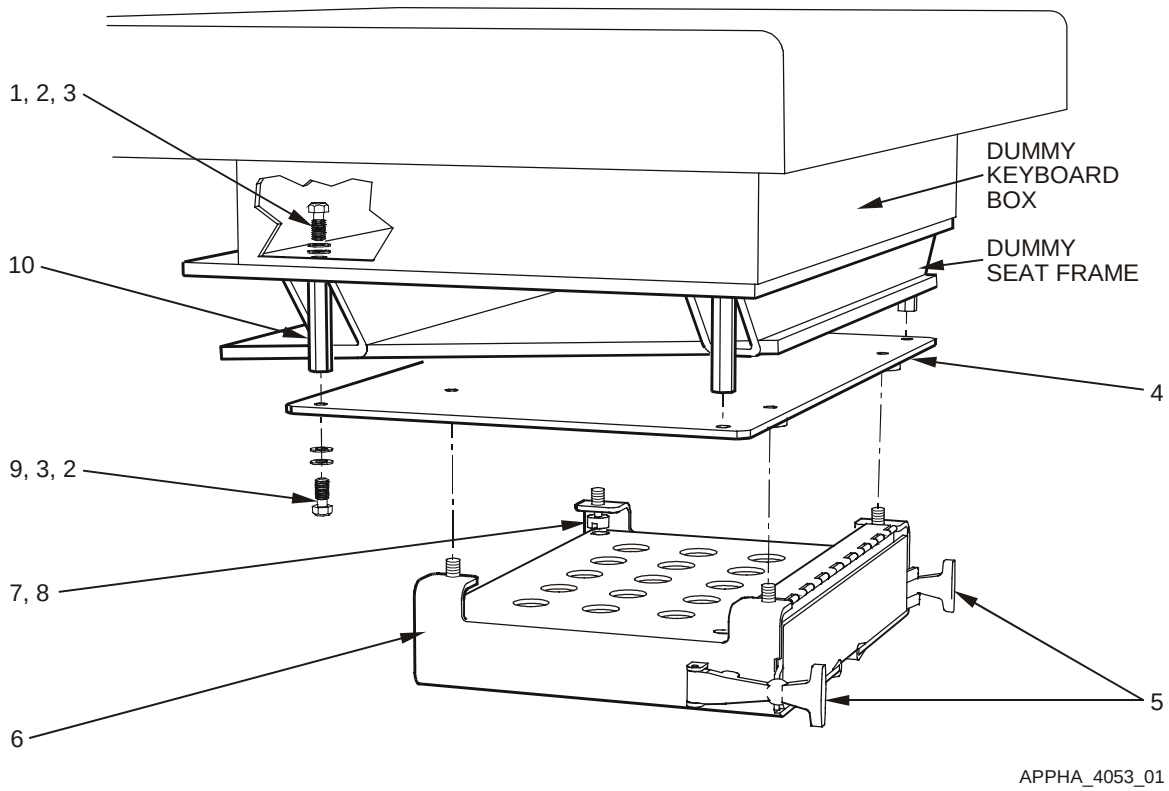

Figure M-10. Remove and Replace Keyboard Unit (KU) Stowage Box

Key and Parts List for Figure M-10

ITEM NO.	NOMENCLATURE	CAGE CODE	PART NUMBER	NSN	QTY	SMR
1	Screw, Cap, Hexagon	80204	B1821AH025C100N	5305-01-389-7984	14	PAOZZ
2	Washer, Flat	96906	MS27183-10	5310-00-809-4058	22	PAOZZ
3	Washer, Lock	96906	MS35338-44	5310-00-582-5965	22	PAOZZ
4	Bracket, Keyboard	0J198	872844-1		1	XBOOO
5	(KU stowage box door latch) Latch, Thumb	94222	37-20-071-20	5340-01-351-3340	2	PAOZZ
6	Box, KU Stowage	0J198	872845-1	2540-01-481-5744	1	PAODD
--	Case, Keyboard	0J198	872845-11		1	XBOOO
--	Bottom, Stowage Box	0J198	872845-12		1	XBOOO
--	Side Rail, Keybd Box	0J198	872845-13		1	XBOOO
--	Side Rail, Keybd Box	0J198	872845-14		1	XBOOO
--	Door, Keyboard Box	0J198	872845-15		1	XBOOO
--	Hinge, Keyboard Box	0J198	872845-16		1	XBOOO
--	Strip, Rubber	0J198	872845-17		1	XBOOO
--	Rivet, Solid, Csk	96906	MS20426AD-4-5	5320-00-117-6950	6	PAOZZ
--	Label, Keyboard Box	0J198	881323-1		1	PAOZZ
--	Screw, Pan Head	96906	MS35206-229	5305-00-984-4989	14	PAOZZ
--	Washer, Flat	96906	MS27183-5	5310-00-983-8483	16	PAOZZ
--	Washer, Lock	96906	MS35338-41	5310-00-045-4007	13	PAOZZ
--	Nut, Plain	96906	MS35649-262	5310-00-934-9747	3	PAOZZ
--	Rubber Edge Trim	39428	8507K16	5325-01-435-2840	9	PAOZZ
--	Adhesive	04963	SCOTCH-GRIP RUB	8040-00-664-4318	1	PAOZZ
--	Grip, Handle Assembly	0J198	861867-1		1	XBOOO
--	Grip, Handle	0J198	861869-1		1	XBOZZ
--	Screw, Machine	96906	MS35206-228	5305-00-984-4988	4	PAOZZ
--	Washer, Lock	96906	MS35338-41	5310-00-045-4007	4	PAOZZ
--	Tape, Shielding, Elect	39428	7648A34		1	XBOZZ
7	Screw, Captive Panel	57177	PH207-05SS1032		4	PAOZZ
8	Retainer, Panel Screw	57177	214-03SS10-32		4	PAOZZ
9	Screw, Cap, Hexagon	80204	B1821AH025C075N	5305-01-389-8000	10	PAOZZ
10	Standoff, Threaded	39428	92230A007		5	PAOZZ

M–6.13 REMOVE/REPLACE KEYBOARD UNIT (KU) STOWAGE BOX DOOR LATCHES

Refer to Figure M-11.

M–6.13.1 REMOVE KEYBOARD UNIT (KU) STOWAGE BOX DOOR LATCHES

a. Pull rubber T-handles and unfasten KU stowage box door latches, if necessary.

b. Remove two pan head screws (1), lock washers (2) and flat washers (3) from each KU stowage box door latch (4) using a No. 2 cross-tip screwdriver.

c. Remove KU stowage box door latch (4).

M–6.13.2 REPLACE KEYBOARD UNIT (KU) STOWAGE BOX DOOR LATCHES

NOTE

The same KU stowage box door latch part is used for each side of the keyboard stowage box. There is a bumper on one side of the latch that should be positioned toward the side of the keyboard stowage box when fastened.

a. Align KU stowage box door latch mounting holes with mounting holes in KU stowage box.

b. Install and tighten two pan head screws (1), lock washers (2) and flat washers (3) for each KU stowage box door latch (4), using a No. 2 cross-tip screwdriver.

c. Pull rubber T-handles and fasten KU stowage box door latches.

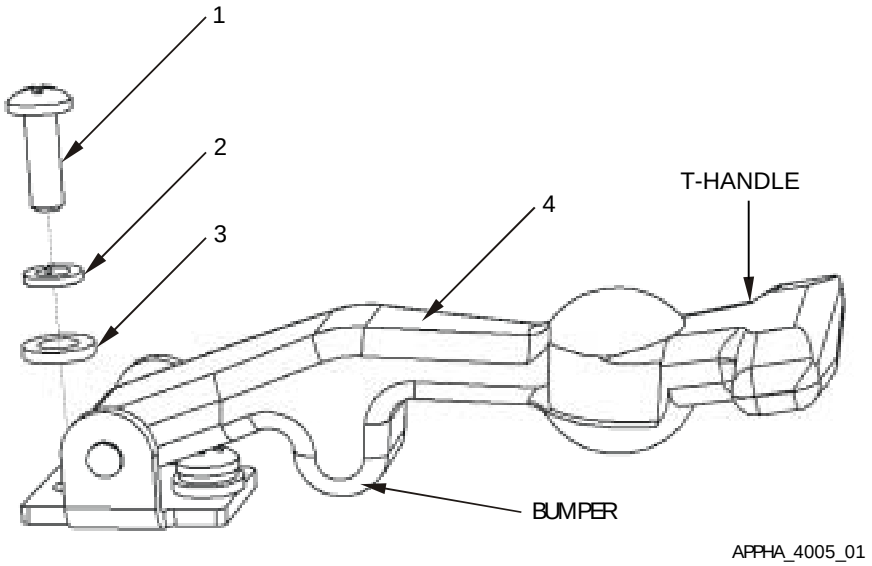

Figure M-11. Remove and Replace Keyboard Unit (KU) Stowage Box Door Latches

Key and Parts List for Figure M-11

ITEM NO.	NOMENCLATURE	CAGE CODE	PART NUMBER	NSN	QTY	SMR
1	Screw, Pan Head	96906	MS35206-229	5305-00-984-4989	4	PAOZZ
2	Washer, Lock	96906	MS35338-41	5310-00-045-4007	4	PAOZZ
3	Washer, Flat	96906	MS27183-5	5310-00-983-8483	4	PAOZZ
4	(KU stowage box door latch) Latch, Thumb	94222	37-20-071-20	5340-01-351-3340	2	PAOZZ

APPENDIX N

SUPPLEMENTARY INFORMATION FOR

M1097 AVENGER

TABLE OF CONTENTS

		Page
N–1	GENERAL	N–3
N–2	COMPONENT ITEM NUMBERS AND PART NUMBERS	N–3
N–3	AVENGER (GFE) ACRONYMS/ABBREVIATIONS	N–3
N–4	SYSTEM INTERFACES	N–4
	N–4.1 MECHANICAL	N–4
	N–4.2 CABLE INTERFACES	N–4
N–5	COMPONENT LOCATION	N–6
	N–5.1 GENERAL LOCATION	N–6
	N–5.2 MOUNTING	N–7
N–6	PLATFORM-UNIQUE TROUBLESHOOTING	N–10
N–7	REMOVAL/REPLACEMENT IN THE PLATFORM	N–10
	N–7.1 FUNCTIONAL CHECK	N–10
	N–7.2 REMOVE/REPLACE W400 POWER CABLE	N–11
	N–7.3 REMOVE/REPLACE W2 DISPLAY CABLE	N–12
	N–7.4 REMOVE/REPLACE W402 INC ADAPTER CABLE	N–13
	N–7.5 REMOVE/REPLACE W403 AFCC/PLGR CABLE	N–14
	N–7.6 REMOVE/REPLACE W4 AUDIO CABLE	N–15
	N–7.7 REMOVE/REPLACE PU ISOLATION ASSEMBLY	N–18
	N–7.8 REMOVE/REPLACE KEYBOARD/DISPLAY MOUNT ASSEMBLY	N–21

LIST OF ILLUSTRATIONS

Page
Figure N-1. Equipment Interface Block Diagram N–5
Figure N-2. Relative Component Locations N–6
Figure N-3. KU and DU Mounting on Driver's Side (Roadside) N–7
Figure N-4. Equipment Mounted on Cab Rear Wall N–8
Figure N-5. KU and DU Mounting on Keyboard/Display Mount Assembly N–9
Figure N-6. Cable Run 1 ..... N–16
Figure N-7. Cable Run 2 ..... N–17
Figure N-8. Remove and Replace PU Isolation Assembly N–20
Figure N-9. Remove and Replace Keyboard/Display Mount Assembly (Top/Front View) N–23
Figure N-10. Remove and Replace Keyboard/Display Mount Assembly (Bottom/Back View) N–24

N–1 GENERAL

This appendix describes the interfaces between the FBCB2 equipment and the M1097 AVENGER. This Appendix also identifies the component parts of the AVENGER platform installation kit and details the removal and replacement procedures peculiar to the M1097 AVENGER.

N–2 COMPONENT ITEM NUMBERS AND PART NUMBERS

Key and Parts List tables contained in the Removal and Replacement section of this Appendix serve a dual purpose. Use the Item Numbers in the Key to identify components and attaching hardware shown in the Figures illustrating the tasks. The nomenclature and part number for the hardware and equipment mounting components of the installation kit also are keyed to the Item Numbers in the tables. Additional parts ordering information, such as Contractor and Government Entity code (CAGE); National Stock Number (NSN); quantity; and Source, Maintenance and Recoverability (SMR) codes, are provided. The Key and Parts List follow the task illustrations.

N–3 AVENGER (GFE) ACRONYMS/ABBREVIATIONS

AFCC	AVENGER Fire Control Computer
CDT	Control Display Terminal
DTU	Distance Transmitter Unit
EPLRS	Enhanced Position Location Radio System
FAAD	Forward Area Air Defense
LNS	LAN Navigator System
RCU	Remote Control Unit
STC	Slew To Cue (Shelf Assembly)
HTU	Hand Held Terminal Unit

N–4 SYSTEM INTERFACES

N–4.1 MECHANICAL

The mechanical hardware-to-hardware interfaces include:

a. Cables

b. V4 Processor Unit (PU)

c. Display Unit (DU)

d. Keyboard Unit (KU)

N–4.2 CABLE INTERFACES

Figure N-1 illustrates a block diagram of the interface between the FBCB2 equipment and the M1097 AVENGER (Platform). Figure N-1 also shows the signal and control interfaces, including the FBCB2 terminal connector labels. The purpose of each cable is listed below:

Cable Name	Purpose
W2 - Cable	Supplies power and signals to the AN/UYK-128(V) Display Unit (DU) and Keyboard Unit (KU). Returns Man Machine Interface (MMI) information from the keyboard to the PU.
W400 - Cable	Connects 28 VDC from Cab Interconnect Panel (CIP) to PU.
W402 - Cable	Provides duplex communication between the PU, Internet Controller (INC) and radios.
W403 - Cable	Connects signal ports from PU to the CIP, and the EPLRS.
W4 - Cable	Connects audio signals from PU to weapons Remote Control Unit (RCU) and Combat Vehicle Crew (CVC) Helmet.
Ground Strap	Provides safety ground for PU.
Ground Strap	Provides safety ground for DU.

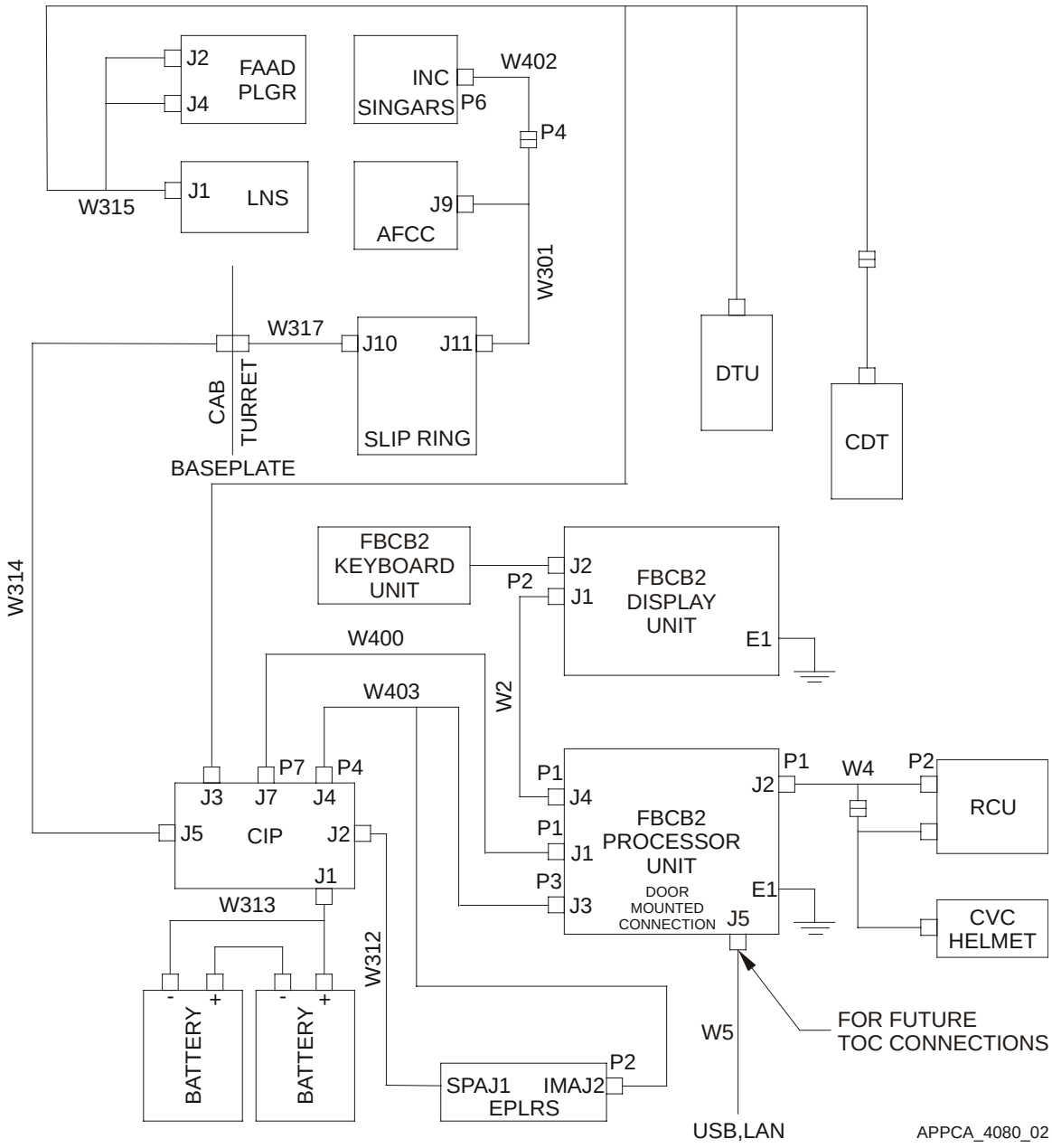

Figure N-1. Equipment Interface Block Diagram

N–5 COMPONENT LOCATION

N–5.1 GENERAL LOCATION

Figure N-2 shows the relative location of the AN/UYK-128(V) system components.

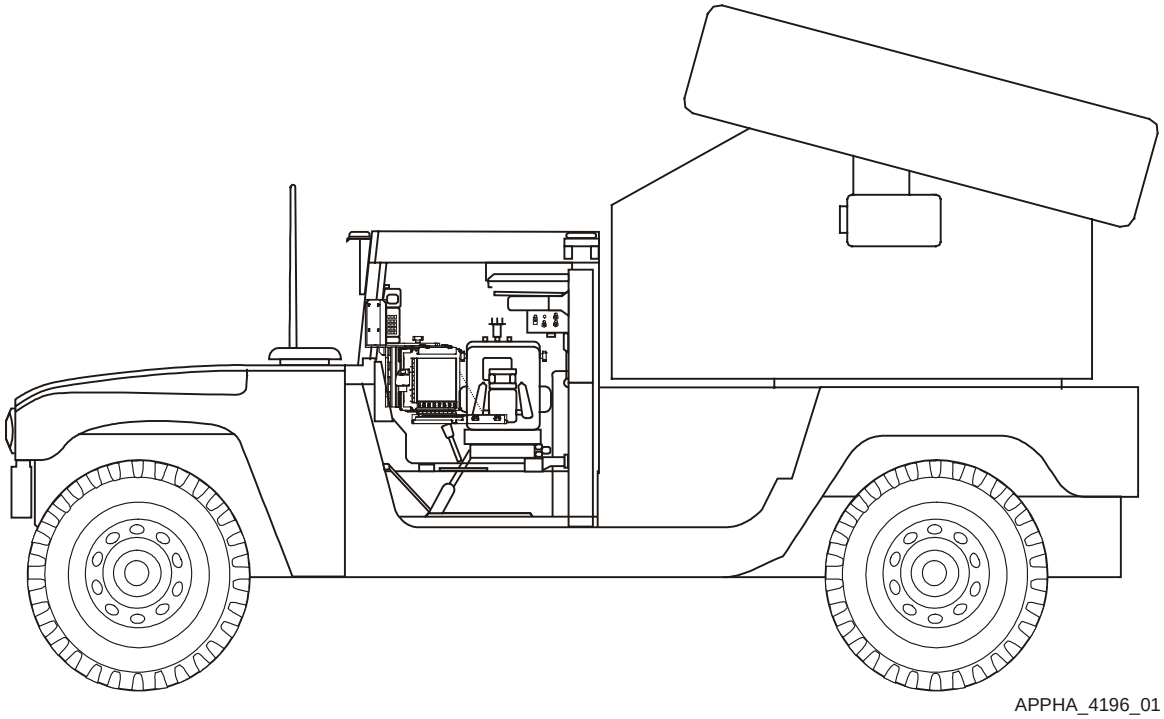

Figure N-2. Relative Component Locations

N–5.2 MOUNTING

Figure N-3 shows a close-up view of the front cab, driver's side. Figure N-3 illustrates the accessibility of the combined KU and DU mounting assembly to the driver.

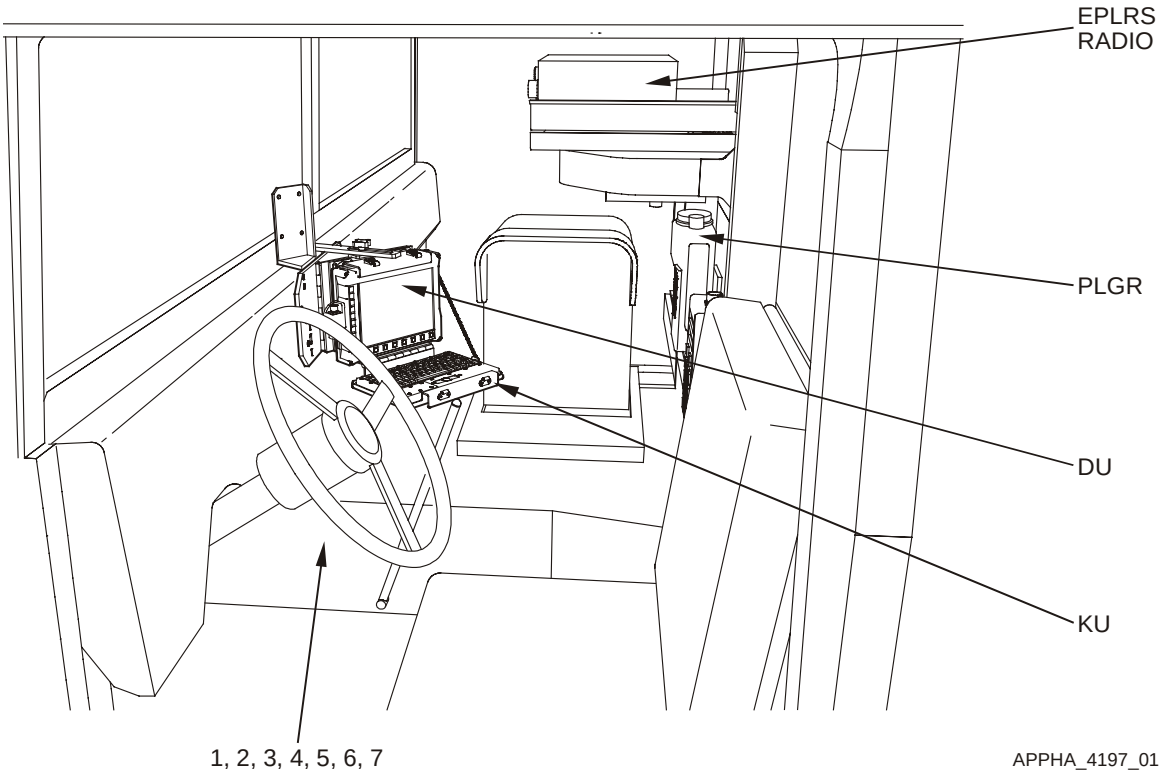

Figure N-3. KU and DU Mounting on Driver's Side (Roadside)

Key and Parts List for Figure N-3

ITEM NO.	NOMENCLATURE	CAGE CODE	PART NUMBER	NSN	QTY	SMR
--	Heat Transfer Unit Adapt					
1	Bracket, Mounting HTU	3A768	443-50053		1	PAOZZ
2	Screw, Machine	80205	NAS623-4-8	5305-00-616-8346	4	PAOZZ
3	Washer, Flat	88044	AN960-416	5310-00-997-1888	13	PAOZZ
4	Nut Bar, HTU Adapter	3A768	443-50057		2	XBOOO
5	Screw, Machine	80205	NAS517-3-3	5305-00-206-3701	3	PAOZZ
6	Washer, Flat	88044	AN960KD10	5310-01-136-3554	5	PAOZZ
7	Nut, Self-Locking	96906	MS21042-L3	5310-00-807-1474	3	PAOZZ

N–5.2.1 EQUIPMENT MOUNTED ON CAB REAR WALL

Figure N-4 shows how the PU and EPLRS equipment are mounted on the STC shelf in the rear of the cab. The Cab Interconnect Panel (CIP), which contains system circuit breakers, is mounted under the shelf. The rack for the PLGR is mounted on the rear wall of the cab below the shelf.

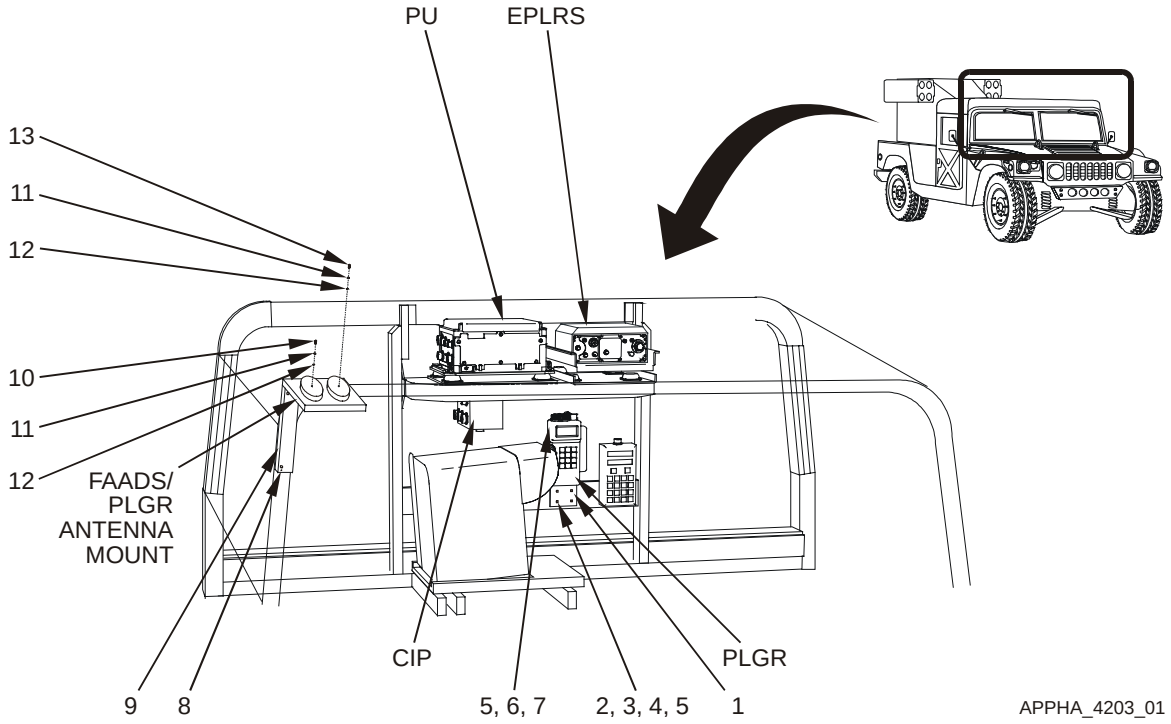

Figure N-4. Equipment Mounted on Cab Rear Wall

Key and Parts List for Figure N-4

ITEM NO.	NOMENCLATURE	CAGE CODE	PART NUMBER	NSN	QTY	SMR
--	PLGR Mounting Hdwe					
1	Bracket, Mount, PLGR	3A768	443-50059		1	PAOZZ
2	Nut, Plain, Blind Rivet	96906	MS27130-A25	5310-01-009-9785	4	PAOZZ
3	Bolt, Close Tolerance	80205	NAS6603-6	5306-00-320-4479	4	PAOZZ
4	Washer, Lock	96906	MS35338-43	5310-00-045-3296	4	PAOZZ
5	Washer, Flat	88044	AN960C10	5310-00-167-0801	8	PAOZZ
6	Screw, Machine	96906	MS51958-64	5305-00-059-3660	4	PAOZZ
7	Nut, Self-Locking	96906	MS21042-3	5310-00-807-1467	4	PAOZZ
8	Bracket, PLGR Adapter	3A768	443-50055		1	XBOZZ
9	Rivet, Blind	96906	MS21141U05-04	5320-01-311-6332	4	PAOZZ
10	Bolt, Shear	80205	NAS6603-3	5306-01-106-8238	1	PAOZZ
11	Washer, Lock	96906	MS35338-43	5310-00-045-3296	6	PAOZZ
12	Washer, Flat	88044	AN960KD10	5310-01-136-3554	5	PAOZZ
13	Bolt, Shear	80205	NAS6603-2	5306-01-106-8237	1	PAOZZ

N–5.2.2 KU AND DU MOUNTING

Figure N-5 shows the adjustable swing-out mounting hardware for the display unit and the swing-down mounting bracket for the keyboard unit. The KU and DU are mounted in protective enclosures that resemble a laptop computer when closed.

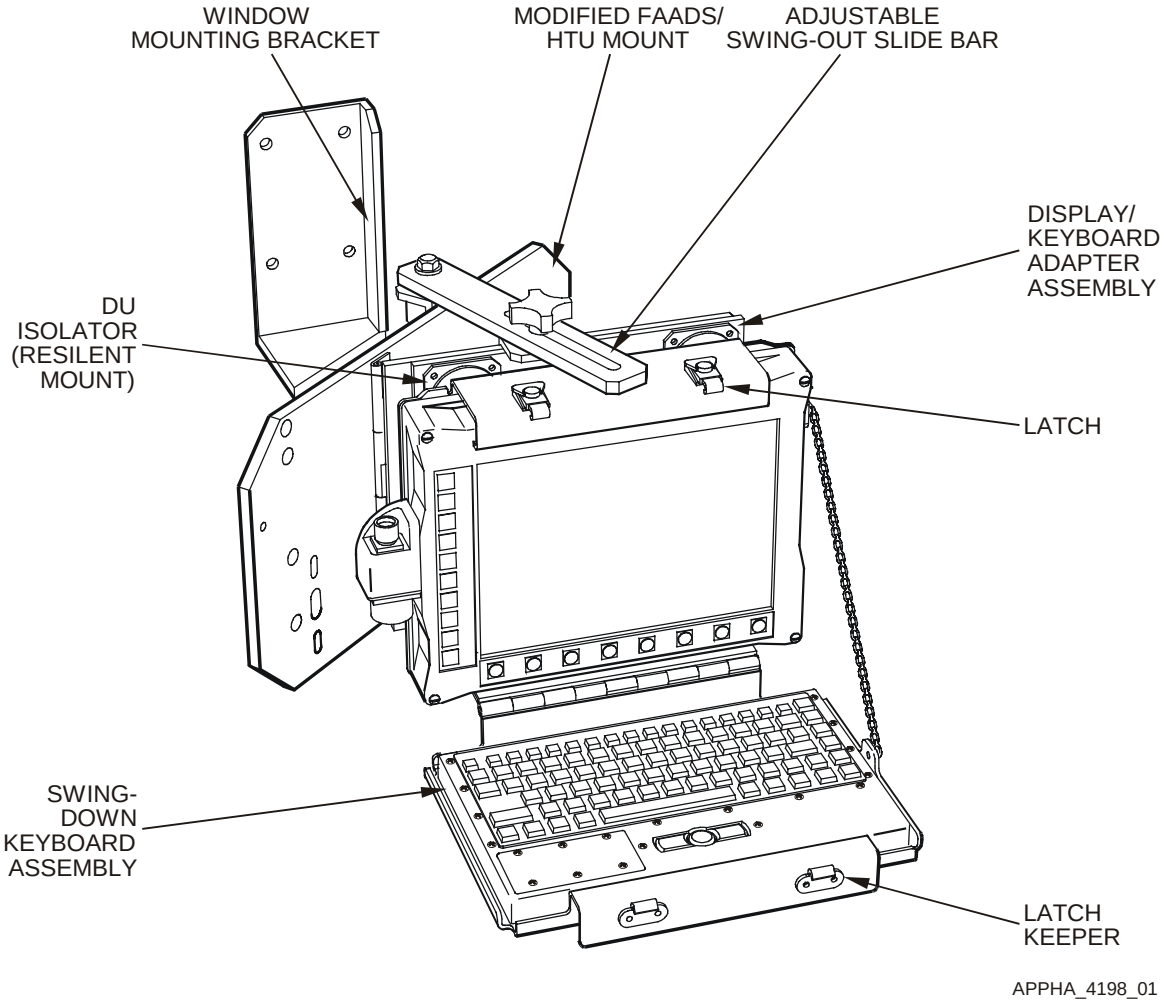

Figure N-5. KU and DU Mounting on Keyboard/Display Mount Assembly

N–6 PLATFORM-UNIQUE TROUBLESHOOTING

The W400 FBCB2 power cable is connected to the CIP. Battery (Vehicle) power cable W313 must be connected to the CIP J1 connector for 28 VDC to the system. The LNS/CB6 toggle switch must be ON and all circuit breakers must be engaged for the system to be fully powered.

N–7 REMOVAL/REPLACEMENT IN THE PLATFORM

Most installations must be tailored to the platform. Hardware and brackets are unique to the installation. Before a part or assembly is removed from a vehicle, fill out a “Maintenance Request” DA Form 2407. One copy of this completed form must remain with the vehicle and the remaining copies must be kept with the failed component. To prove the operability of the system after an item is replaced, perform the system Functional Check.

N–7.1 FUNCTIONAL CHECK

N–7.1.1 POWER UP

Power up and initialize all interface equipment and the AN/UYK-128(V) In Accordance With (IAW) the Operator’s Manual TM 11-7010-326-10, or Pocket Guide TB 11-7010-326-10.

N–7.1.2 VERIFICATION

NOTE

Observe that the Display Unit PWR, DISP and CPU green LED lights are lit.

a. Observe that the PLGR synchronizes with PU, indicated by the PLGR dialog box showing green.

b. Observe that the Router synchronizes with the PU, indicated by the Router dialog box showing green.

c. At the Session Manager screen, select OPS button to display the OPS screen.

d. Verify the GPS status is either green or amber on the Classification/Status Bar.

e. Verify the Communications status is either green or amber on the Classification/Status Bar.

N–7.1.3 POWER DOWN

Power down all interface equipment and the AN/UYK-128(V) IAW the Operator’s Manual TM 11-7010-326-10, or Pocket Guide TB 11-7010-326-10.

N–7.2 REMOVE/REPLACE W400 POWER CABLE

Refer to Figure N-6.

N–7.2.1 REMOVE W400 POWER CABLE

WARNING

Before conducting maintenance involving the removal or replacement of system components, ensure that all power to the FBCB2 system is off (including power from the vehicle). Failure to comply with warning may result in equipment damage or injury to personnel.

a. Power down AN/UYK-128(V) system IAW Operator's Manual TM 11-7010-326-10, or Pocket Guide TB 11-7010-326-10.

b. Disconnect W400-FBP1 cable connector from PU J1 connector.

c. Install protective cap on PU J1 connector.

d. Disconnect W400-CIP7 power cable connector from the Cab Interconnect Panel (CIP) J7 connector.

NOTE

Note cable routing and tie-wrap locations before removing cable or tie-wraps.

e. Remove tie-wraps securing W400 cable as required using diagonal wire cutters.

f. Remove W400 power cable (2).

N–7.2.2 REPLACE W400 POWER CABLE

a. Route W400 power cable (2) from CIP under the STC shelf and through the opening at the end of the shelf to the PU.

b. Remove protective cap from PU J1 connector.

c. Connect W400-FBP1 cable connector to PU J1 connector.

d. Connect W400-CPI7 cable connector to CPI J7 connector.

e. Secure W400 cable using tie-wraps, as applicable.

f. Dress tie-wraps using diagonal wire cutters.

g. Perform Functional Check IAW paragraph N–7.1.

N–7.3 REMOVE/REPLACE W2 DISPLAY CABLE

Refer to Figure N-6.

N–7.3.1 REMOVE W2 DISPLAY CABLE

WARNING

Before conducting maintenance involving the removal or replacement of system components, ensure that all power to the FBCB2 system is off (including power from the vehicle). Failure to comply with warning may result in equipment damage or injury to personnel.

a. Power down AN/UYK-128(V) system IAW Operator's Manual TM 11-7010-326-10, or Pocket Guide TB 11-7010-326-10.

b. Disconnect W2-P1 cable connector from PU J4 connector.

c. Install protective cap on PU J4 connector.

d. Disconnect W2-P2 cable connector from display J1 connector.

e. Remove latch pins and position weapons Remote Control Unit (RCU) in cradle assembly to access W2 cable.

NOTE

Note cable routing and tie-wrap locations before removing cable or tie-wraps.

f. Remove tie-wraps securing W2 cable using diagonal wire cutters.

g. Remove W2 display cable (4) by pulling display end from under RCU and up through the STC shelf opening.

N–7.3.2 REPLACE W2 DISPLAY CABLE

a. Route W2 display cable (4) down through opening in STC rack and under the RCU to display unit.

b. Remove protective cap from PU J4 connector.

c. Connect W2-P1 cable connector to PU J4 connector.

d. Connect W2-P2 cable connector to display J1 connector.

e. Secure W2 display cable using tie-wraps.

f. Dress tie-wraps using diagonal wire cutters.

g. Reposition weapons RCU in cradle assembly and secure latch pins.

h. Perform Functional Check IAW paragraph N–7.1.

N–7.4 REMOVE/REPLACE W402 INC ADAPTER CABLE

Refer to Figure N-7.

N–7.4.1 REMOVE W402 INC ADAPTER CABLE

WARNING

Before conducting maintenance involving the removal or replacement of system components, ensure that all power to the FBCB2 system is off (including power from the vehicle). Failure to comply with warning may result in equipment damage or injury to personnel.

a. Power down AN/UYK-128(V) system IAW Operator's Manual TM 11-7010-326-10, or Pocket Guide TB 11-7010-326-10.

b. Disconnect W402-A2 P6 adapter cable connector from INC A2 J6 connector on the front of the INC, which is mounted on the left-center of the turret shelf panel.

c. Disconnect W402-CN J4 adapter cable from the W301-CN P4 connector behind the SINCGARS/INC unit.

d. Remove tie-wraps securing W402 INC adapter cable using diagonal wire cutters.

e. Remove W402 INC adapter cable (1).

N–7.4.2 REPLACE W402 INC ADAPTER CABLE

a. Route W402 INC adapter cable (1) from the front of the INC in the left-center of the turret shelf panel behind the SINCGARS/INC unit.

b. Connect W402-CN J4 adapter cable connector to the W301-CN P4 connector behind the shelf panel.

c. Connect W402-A2 P6 adapter cable connector to the INC A2 J6 connector on the front of the INC.

d. Secure W402 INC adapter cable using tie-wraps.

e. Dress tie-wraps using diagonal wire cutters.

f. Perform Functional Check IAW paragraph N–7.1.

N–7.5 REMOVE/REPLACE W403 AFCC/PLGR CABLE

Refer to Figure N-6.

N–7.5.1 REMOVE W403 AFCC/PLGR CABLE

WARNING

Before conducting maintenance involving the removal or replacement of system components, ensure that all power to the FBCB2 system is off (including power from the vehicle). Failure to comply with warning may result in equipment damage or injury to personnel.

a. Power down AN/UYK-128(V) system IAW Operator's Manual TM 11-7010-326-10, or Pocket Guide TB 11-7010-326-10.

b. Disconnect W403-FBP3 AFCC/PLGR cable connector from PU J3 connector.

c. Install protective cap on PU J3 connector.

d. Disconnect W403-CI P4 cable connector from CIP J4 connector under the STC shelf assembly.

e. Disconnect W403-IM P2 cable connector from EPLRS IMA J2 connector.

NOTE

Note cable routing and tie-wrap locations before removing cable or tie-wraps.

f. Remove tie-wraps securing W403 AFCC/PLGR cable using diagonal cutters.

g. Remove W403 AFCC/PLGR cable (1).

N–7.5.2 REPLACE W403 AFCC/PLGR CABLE

a. Route W403 AFCC/PLGR cable (1) FBP3 connector up through the opening in the STC shelf to the PU.

b. Remove protective cap from PU J3 connector.

c. Connect W403-FBP3 cable connector to PU J3 connector.

d. Connect W403-CI P4 cable connector to CIP J4 connector under the STC shelf.

e. Connect W403-IM P2 cable connector to EPLRS IMA J2 connector.

f. Secure W403 AFCC/PLGR cable using tie-wraps.

g. Dress tie-wraps using diagonal wire cutters.

h. Perform Functional Check IAW paragraph N–7.1.

N–7.6 REMOVE/REPLACE W4 AUDIO CABLE

Refer to Figure N-6.

N–7.6.1 REMOVE W4 AUDIO CABLE

WARNING

Before conducting maintenance involving the removal or replacement of system components, ensure that all power to the FBCB2 system is off (including power from the vehicle). Failure to comply with warning may result in equipment damage or injury to personnel.

a. Power down AN/UYK-128(V) system IAW Operator's Manual TM 11-7010-326-10, or Pocket Guide TB 11-7010-326-10.

b. Disconnect W4-J1 cable connector from Combat Vehicle Crew (CVC) helmet P1 connector.

c. Disconnect W4-P2 cable connector from weapons RCU connector (use fifth connector from left on bottom of RCU).

d. Disconnect W4-P1 cable connector from PU J2 connector.

e. Install protective cap on PU J2 connector.

NOTE

Note cable routing and tie-wrap locations before removing cable or tie-wraps.

f. Remove tie-wraps securing W4 cable using diagonal wire cutters.

g. Remove W4 audio cable (5).

N–7.6.2 REPLACE W4 AUDIO CABLE

a. Route W4 audio cable (5).

b. Remove protective cap from PU J2 connector.

c. Connect W4-P1 cable connector to PU J2 connector.

d. Connect W4-P2 cable connector to weapons RCU connector (fifth connector from left on bottom).

e. Connect W4-J1 cable connector to CVC helmet P1 connector.

f. Secure W4 audio cable using tie-wraps.

g. Dress tie-wraps using diagonal wire cutters.

h. Perform Functional Check IAW paragraph N–7.1.

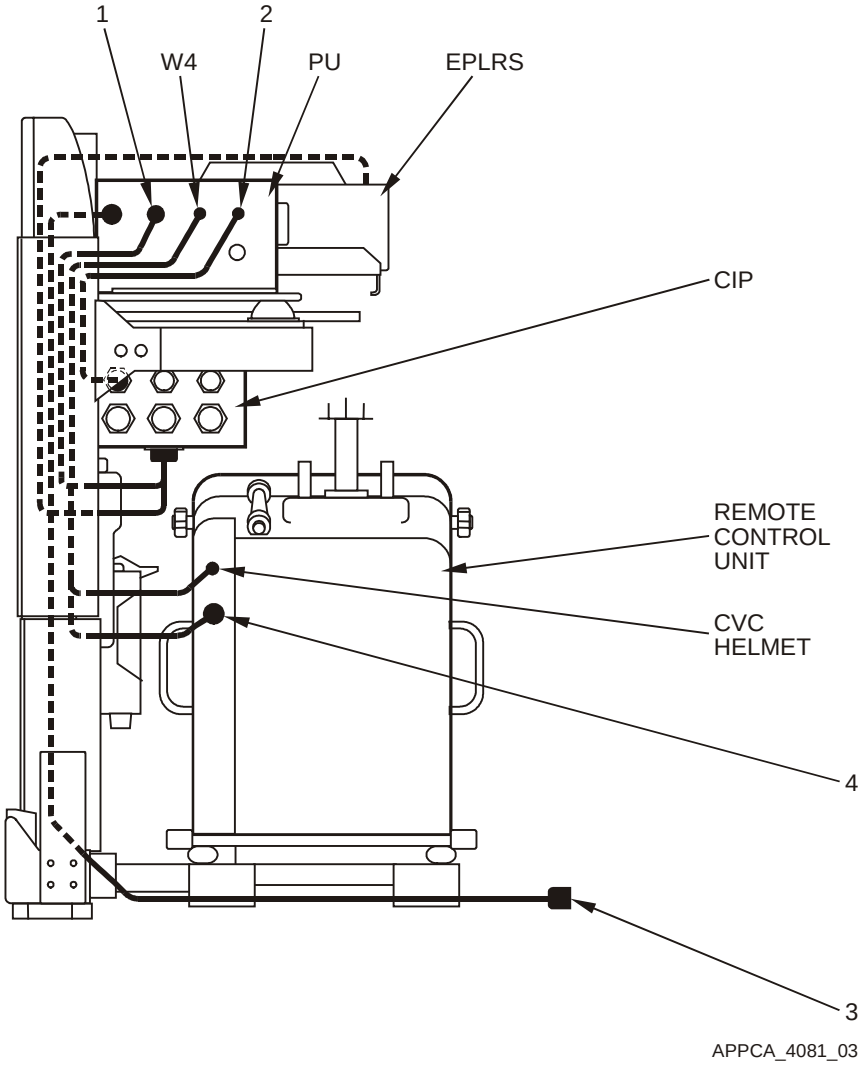

Figure N-6. Cable Run 1

Key and Parts List for Figure N-6

ITEM NO.	NOMENCLATURE	CAGE CODE	PART NUMBER	NSN	QTY	SMR
1	Cable Assembly W403	3A768	443-50063	5995-01-478-4910	1	PAODD
2	Cable Assembly W400	3A768	443-50060	5995-01-478-4861	1	PAODD
3	Cable Assembly W2	0J198	881327-2	5995-01-478-4873	1	PAODD
4	Cable Assembly, W4	0J198	881263-1		1	PAODD
--	Cable Assembly W402	3A768	443-50062	5995-01-478-4907	1	PAODD
--	Strap, Tie Down, Elect	39428	7130K31		A/R	PAOZZ

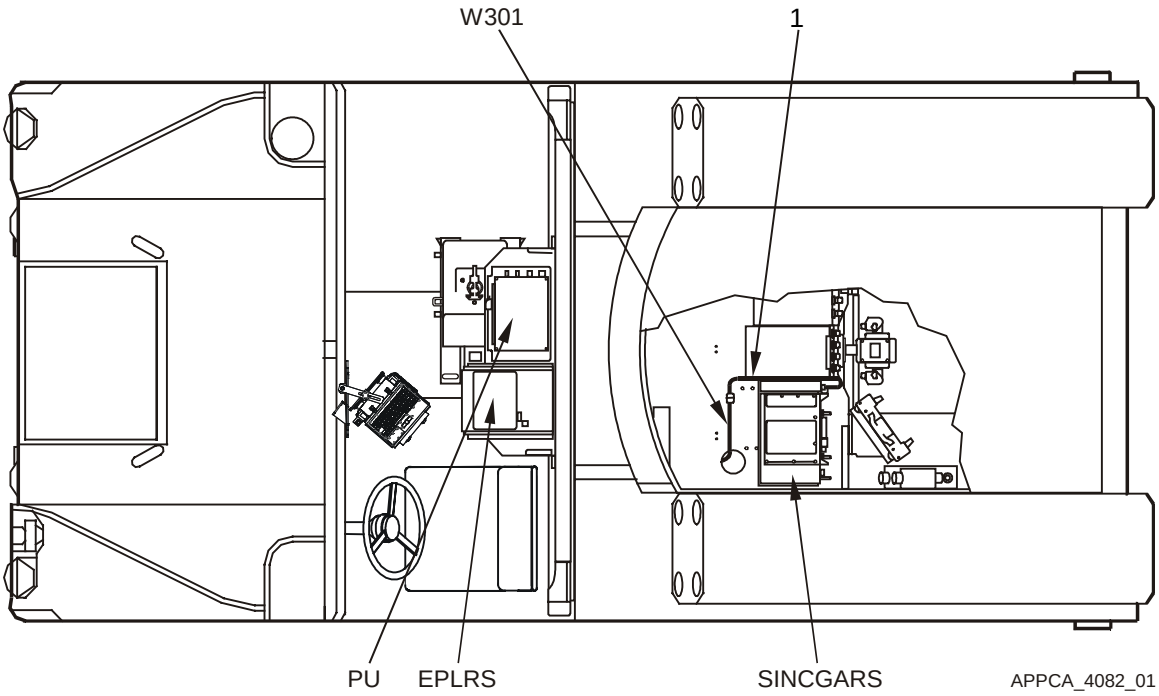

Figure N-7. Cable Run 2

Key and Parts List for Figure N-7

ITEM NO.	NOMENCLATURE	CAGE CODE	PART NUMBER	NSN	QTY	SMR
1	Cable Assembly W402	3A768	443-50062	5995-01-478-4907	1	PAODD
--	Strap, Tie Down, Elect	39428	7130K31		A/R	PAOZZ

N–7.7 REMOVE/REPLACE PU ISOLATION ASSEMBLY

Refer to Figure N-8.

NOTE

Ground straps are attached to components at one end (PU and DU) and a frame ground at the other end. Regardless of where the ground strap terminates, it is usually a burnished (void of paint) area. If the ground strap is removed from a burnished area make sure to return it to the same burnished area. Where applicable, always connect the ground strap first when assembling, and disconnect the ground strap last when disassembling.

N–7.7.1 REMOVE PU ISOLATION ASSEMBLY

WARNING

Before conducting maintenance involving the removal or replacement of system components, ensure that all power to the FBCB2 system is off (including power from the vehicle). Failure to comply with warning may result in equipment damage or injury to personnel.

a. Power down AN/UYK-128(V) system IAW Operator's Manual TM 11-7010-326-10, or Pocket Guide TB 11-7010-326-10.

NOTE

Do not remove the Removable Hard Disk Drive Cartridge (RHDDC) or locking bracket from PU.

b. Remove PU IAW Unit Maintenance Manual TM 11-7010-326-20&P, Chapter 2.

NOTE

Remove the two rear screws using the socket and ratchet. Remove the two forward screws using the open-end wrench.

c. Remove one hex head screw (2), lock washer (3), flat washer (4) and ground strap from PU isolation assembly (1) bottom plate using a 7/16" socket with ratchet, 3" extension or a 7/16" open-end wrench.

d. Remove remaining three hex head screws (2), lock washers (3) and flat washers (4) from PU isolation assembly (1) bottom plate using a 7/16" socket with ratchet, 3" extension and/or a 7/16" open-end wrench.

e. Remove PU isolation assembly (1) from STC shelf assembly.

N–7.7.2 REPLACE PU ISOLATION ASSEMBLY

a. Align four PU isolation assembly (1) bottom plate holes with STC shelf mounting holes.

NOTE

To ensure positive ground, PU ground strap must make direct contact with bare metal. Ensure PU ground strap is installed in its original location at the PU isolation assembly bottom plate mounting hole. Slip the lock washer, flat washer and ground strap on the mounting screw before installing and tightening screw.

NOTE

Remove the two rear screws using the socket and ratchet. Remove the two forward screws using the open-end wrench.

b. Install one hex head screw (2), lock washer (3), flat washer (4) and ground strap using a 7/16” socket with ratchet, 3” extension or a 7/16” open-end wrench.

c. Install remaining three hex head screws (2), lock washers (3) and flat washers (4) using a 7/16” socket with ratchet, 3” extension and/or a 7/16” open-end wrench.

d. Install PU IAW Unit Maintenance Manual TM 11-7010-326-20&P, Chapter 2.

e. Perform Functional Check IAW paragraph N–7.1.

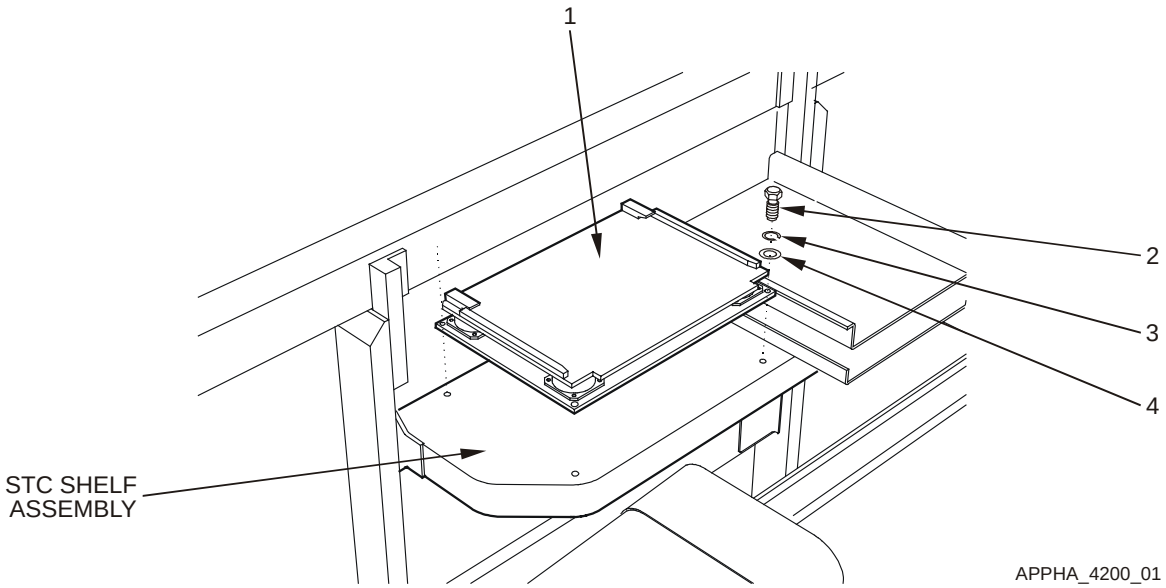

Figure N-8. Remove and Replace PU Isolation Assembly

Key and Parts List for Figure N-8

ITEM NO.	NOMENCLATURE	CAGE CODE	PART NUMBER	NSN	QTY	SMR
1	(PU Isolation Assembly) Plate, Resilient Mount PU	0J198	872826-3		1	PAODD
2	Screw, Cap, Hexagon	80204	B1821AH025F100N	5305-00-068-0515	5	PAOZZ
3	Washer, Lock	96906	MS35338-44	5310-00-582-5965	9	PAOZZ
4	Washer, Flat	88044	AN960-416	5310-00-997-1888	13	PAOZZ
--	Assembly, PU Lock	0J198	861865-1		1	XBOOO
--	Bracket, Locking	0J198	861871-1		1	XBOZZ
--	Screw	80205	MS35190-253	5305-00-059-4568	2	PAOZZ

N–7.8 REMOVE/REPLACE KEYBOARD/DISPLAY MOUNT ASSEMBLY

Refer to Figure N-9 and Figure N-10.

NOTE

Ground straps are attached to components at one end (PU and DU) and a frame ground at the other end. Regardless of where the ground strap terminates, it is usually a burnished (void of paint) area. If the ground strap is removed from a burnished area make sure to return it to the same burnished area. Where applicable, always connect the ground strap first when assembling, and disconnect the ground strap last when disassembling.

N–7.8.1 REMOVE KEYBOARD/DISPLAY MOUNT ASSEMBLY

WARNING

Before conducting maintenance involving the removal or replacement of system components, ensure that all power to the FBCB2 system is off (including power from the vehicle). Failure to comply with warning may result in equipment damage or injury to personnel.

a. Power down AN/UYK-128(V) system IAW Operator's Manual TM 11-7010-326-10, or Pocket Guide TB 11-7010-326-10.

b. Access Avenger 10.4" display unit from driver's side by swinging keyboard mount bracket (5) outward toward the steering wheel.

c. Unfasten two latches (6) (See Figure N-9) on top of keyboard mount bracket (5) and swing keyboard down into position.

d. Disconnect KU cable connector from display J2 connector.

e. Remove four machine screws (9), lock washers (8) and flat washers (7) to remove DU from keyboard mount bracket (5) IAW Unit Maintenance Manual TM 11-7010-326-20&P, Chapter 2. (Pull bottom out first.)

f. Temporarily return the keyboard to the vertical position and secure it with the two latches (6) on top of keyboard mount bracket (5).

g. Remove four screws (32) and lock washers (31) from the bottom of the keyboard bracket (14) using a No. 1 cross-tip screwdriver.

h. Unfasten two latches (6) on top of keyboard mount bracket (5) and swing keyboard down into position.

i. Remove the chain (10) and loop clamp (40) using a No. 2 cross-tip screwdriver to free keyboard cable.

j. Remove KU from keyboard mount bracket (5).

k. Loosen and remove hand knob assembly (24) with flat washer (25) and two plastic washers (26) from top of slide bar (1).

l. Rotate slide bar (1) clear of display bracket (2).

N-7.8.1 REMOVE KEYBOARD/DISPLAY MOUNT ASSEMBLY (Continued)

m. Remove sixteen flat head screws (17), flat washers (18) and lock nuts (19) from the resilient mount isolators (3) and display keyboard bracket (16) using a No. 3 cross-tip screwdriver.

n. Remove resilient mount isolators (3) from display keyboard bracket (16).

N–7.8.2 REPLACE KEYBOARD/DISPLAY MOUNT ASSEMBLY

a. Align sixteen resilient mount isolator (3) screw holes with mounting holes in display keyboard bracket (16).

b. Install sixteen flat head screws (17), flat washers (18) and lock nuts (19) on the resilient mount isolators (3) and display keyboard bracket (16) using a No. 3 cross-tip screwdriver.

c. Rotate slide bar (1) to align with top of display bracket (2).

d. Install and tighten hand knob assembly (24) with flat washer (25) and two plastic washers (26) on top of slide bar (1).

e. Route keyboard cable in keyboard bracket (14) so cable is to outside of corner mounting foot.

f. Stow excess keyboard cable inboard of bracket mounting feet. (See Figure N-10.)

g. Install four screws (32) and lock washers (31) to secure KU in keyboard bracket (14) using a No. 1 cross-tip screwdriver.

h. Secure keyboard cable and chain (10) with loop clamp (40) and attaching hardware using a No. 2 cross-tip screwdriver.

i. Install four machine screws (9), lock washers (8) and flat washers (7) to secure DU in keyboard mount bracket (5) IAW Unit Maintenance Manual TM 11-7010-326-20&P, Chapter 2.

j. Connect KU cable connector to display J2 connector.

k. Perform Functional Check IAW paragraph N–7.1.

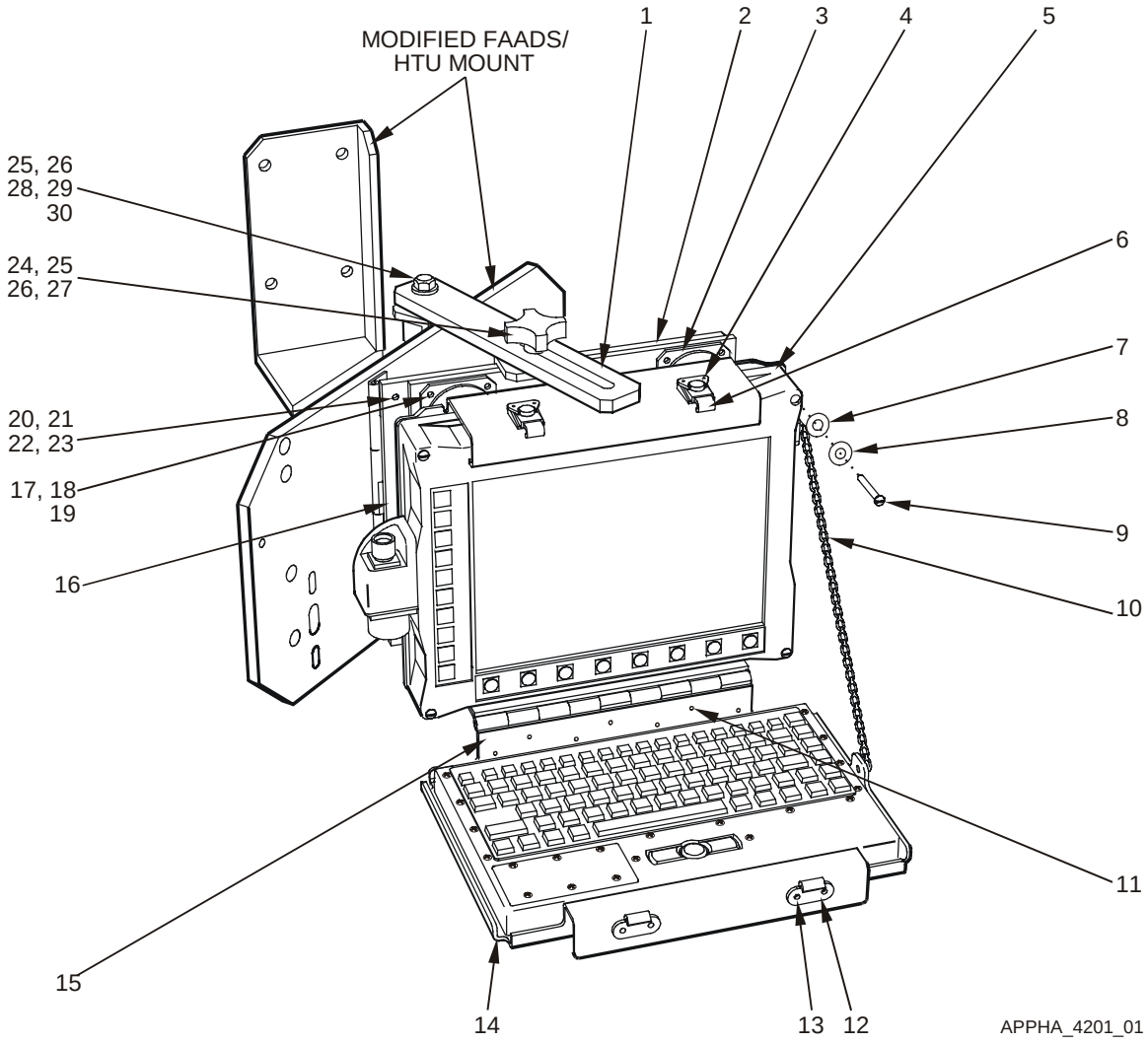

Figure N-9. Remove and Replace Keyboard/Display Mount Assembly (Top/Front View)

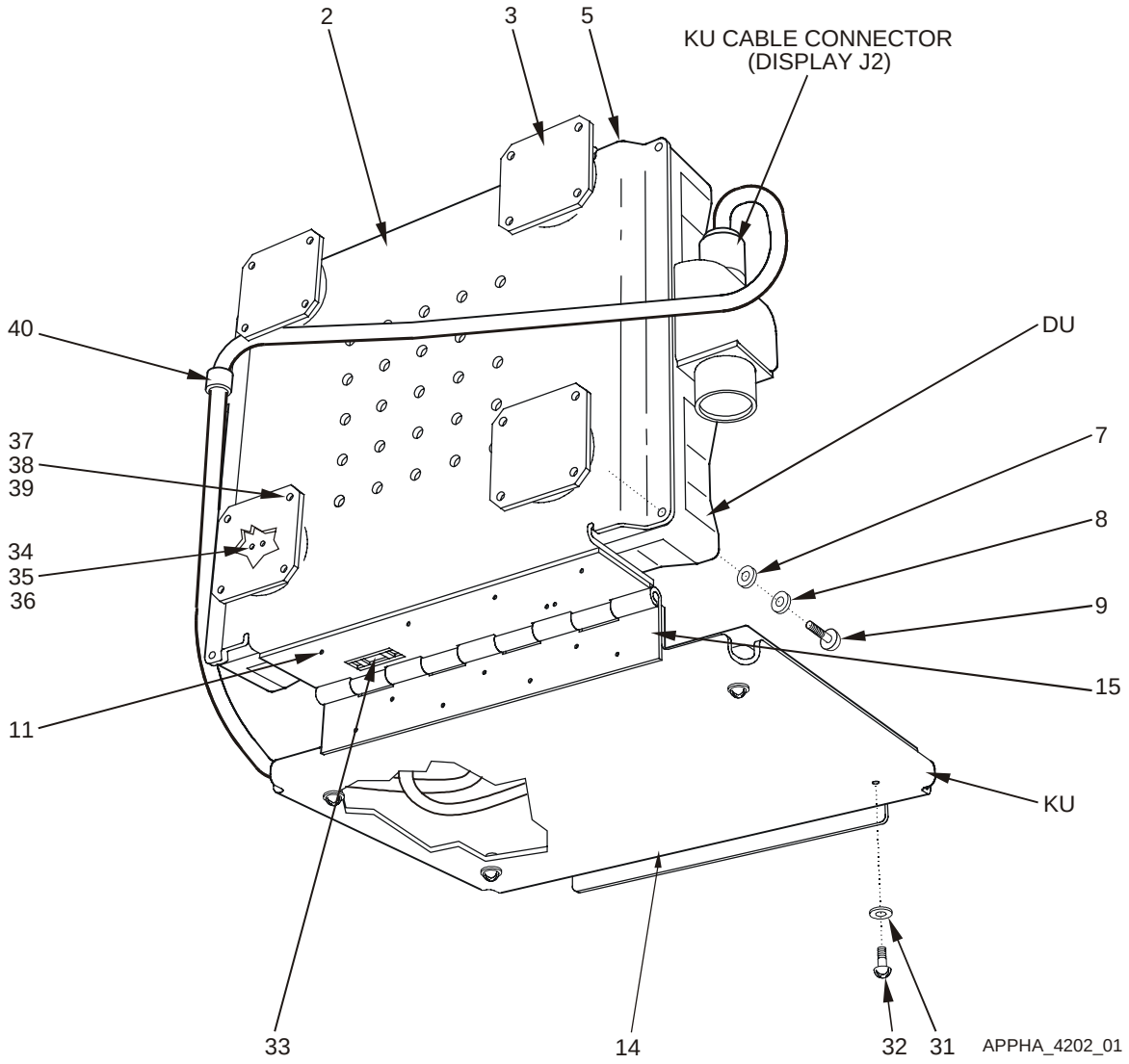

Figure N-10. Remove and Replace Keyboard/Display Mount Assembly (Bottom/Back View)

Key and Parts List for Figure N-9 and Figure N-10

ITEM NO.	NOMENCLATURE	CAGE CODE	PART NUMBER	NSN	QTY	SMR
1	Bar, Slide	3A768	443-50054		1	XBOZZ
2	Bracket, Display	3A768	443-50052-3		1	XBOZZ
3	Mount, Resilient (Isolator)	81860	TTNA-2	5342-01-158-2186	4	PAOZZ
4	Rivet, Solid	96906	MS20427-4C6	5320-00-680-8779	4	PAOZZ
5	Bracket, Mount Keybd	3A768	443-50052-1		1	XBOOO
6	Latch, Rim	94222	K3-2347-52	5340-01-424-2803	2	PAOZZ
7	Washer, Flat	80205	NAS1149C0363R	5310-01-352-9575	4	PAOZZ
8	Washer, Lock	96906	MS35338-43	5310-00-045-3296	4	PAOZZ
9	Screw, Machine	96906	MS51958-68	5305-00-059-3664	4	PAOZZ
10	Chain	3A768	443-50052-6		1	PAOZZ
11	Rivet, Blind	96906	MS21140U0503	5320-01-311-6331	11	PAOZZ
12	Strike, Catch	94222	K3-0334-52	5340-00-685-5899	2	PAOZZ
13	Rivet, Blind	80205	NAS1398M4-3	5320-00-080-0476	4	PAOZZ
14	Bracket, Keybd	3A768	443-50052-2		1	XBOZZ
15	Hinge	3A768	443-50052-5		1	PAOZZ
16	Bracket, Display Keybd	3A768	443-50056		1	XBOZZ
17	Screw, Machine	80205	NAS514P1032-10	5305-00-638-5444	16	PAOZZ
18	Washer, Flat	88044	AN960C10	5310-00-167-0801	16	PAOZZ
19	Nut, Self-Locking	96906	MS21042-3	5310-00-807-1467	16	PAOZZ
20	Bolt, Shear	80205	NAS6604-3	5306-01-142-9400	4	PAOZZ
21	Washer, Lock	96906	MS35338-44	5310-00-582-5965	4	PAOZZ
22	Washer, Flat	88044	AN960-416	5310-00-997-1888	4	PAOZZ
23	Insert, Screw Thread	29372	KNKD428JSY	5325-01-086-8440	4	PAOZZ
24	Hand Knob Assembly		AL-31067D (GFE)		1	
25	Washer, Flat	96906	MS27183-12 (GFE)	5310-00-081-4219	1	PAOZZ
26	Washer, Plastic		MS51859-7 (GFE)		2	
27	Nut, Plain, Blind Rivet	96906	MS27130-S31	5310-01-015-1021	1	PAOZZ
28	Screw, Hex (GFE)		B1821AH031C100N		1	
29	Washer, Flat	96906	MS27183-12	5310-00-081-4219	1	PAOZZ
30	Nut, Self-Locking	96906	MS17829-5C	5310-00-245-3424	1	PAOZZ

Key and Parts List for Figure N-9 and Figure N-10 (Continued)

ITEM NO.	NOMENCLATURE	CAGE CODE	PART NUMBER	NSN	QTY	SMR
31	Washer, Lock	96906	MS35338-41	5310-00-045-4007	4	PAOZZ
32	Screw, Machine	96906	MS51957-20	5305-00-054-5654	4	PAOZZ
33	Key, Housing	3A768	443-50052-4		2	PAOZZ
34	Screw, Machine	96906	MS51957-44	5305-00-054-6669	16	PAOZZ
35	Washer, Lock	96906	MS35338-42	5310-00-045-3299	16	PAOZZ
36	Washer, Flat	80205	NAS1149CN832R	5310-01-352-9572	16	PAOZZ
37	Screw, Machine	80205	NAS514P1032-10	5305-00-638-5444	16	PAOZZ
38	Washer, Flat	88044	AN960C10	5310-00-167-0801	16	PAOZZ
39	Nut, Self-Locking	96906	MS21042-3	5310-00-807-1467	16	PAOZZ
40	Clamp, Loop	96906	MS21919WDG5	5340-00-200-8560	1	PAOZZ
--	Assembly, DU Lock	0J198	872843-1		1	XBOOO
--	Bracket, Locking	0J198	861871-3		1	XBOZZ
--	Screw	80205	MS35190-253	5305-00-059-4568	2	PAOZZ
--	Washer, Lock	96906	MS35338-42	5310-00-045-3299	2	PAOZZ

APPENDIX P

SUPPLEMENTARY INFORMATION FOR

M1031

COMMERCIAL UTILITY CARGO VAN (CUCV)

TABLE OF CONTENTS

Page
P–1 GENERAL P–3
P–2 COMPONENT ITEM NUMBERS AND PART NUMBERS P–3
P–3 SYSTEM INTERFACES P–4
P–3.1 MECHANICAL P–4
P–3.2 CABLE INTERFACES P–4
P–4 COMPONENT LOCATION P–6
P–4.1 GENERAL LOCATION P–6
P–4.2 MOUNTING P–7
P–5 PLATFORM-UNIQUE TROUBLESHOOTING P–8
P–6 REMOVAL/REPLACEMENT IN THE PLATFORM P–8
P–6.1 FUNCTIONAL CHECK P–8
P–6.2 REMOVE/REPLACE W1 POWER CABLE P–9
P–6.3 REMOVE/REPLACE W2 DISPLAY CABLE P–10
P–6.4 REMOVE/REPLACE W3 SERIAL INTERFACE ADAPTER DEVICE (SIAD) P–11
P–6.5 REMOVEL/REPLACE W3P PLGR CABLE P–12
P–6.6 REMOVE/REPLACE W3N INC CABLE P–13
P–6.7 REMOVE/REPLACE PU ISOLATION ASSEMBLY P–15
P–6.8 REMOVE/REPLACE DU ISOLATION ASSEMBLY P–19
P–6.9 REMOVE/REPLACE KEYBOARD UNIT (KU) STOWAGE BOX P–21

LIST OF ILLUSTRATIONS

Page
Figure P-1. Equipment Interface Block Diagram P–5
Figure P-2. Relative Component Locations P–6
Figure P-3. Front View-DU Mounting P–7
Figure P-4. Top Down View-DU and KU Stowage Box Mounting P–7
Figure P-5. Cable Run P–14
Figure P-6. Remove and Replace PU Isolation Assembly P–17
Figure P-7. Remove and Replace DU Isolation Assembly P–20
Figure P-8. Remove and Replace Keyboard Unit (KU) Stowage Box P–21

P–1 GENERAL

This appendix describes the interfaces between the FBCB2 equipment and the M1031 Commercial Utility Cargo Van (CUCV). This appendix also identifies the component parts of the M1031 platform installation kit and details the removal and replacement procedures particular to the M1031.

P–2 COMPONENT ITEM NUMBERS AND PART NUMBERS

Key and Parts List tables contained in the Removal and Replacement section of this Appendix serve a dual purpose. Use the Item Numbers in the Key to identify components and attaching hardware shown in the Figures illustrating the tasks. The nomenclature and part number for the hardware and equipment mounting components of the installation kit also are keyed to the Item Numbers in the tables. Additional parts ordering information, such as Contractor and Government Entity code (CAGE); National Stock Number (NSN); quantity; and Source, Maintenance and Recoverability (SMR) codes, are provided. The Key and Parts List follow the task illustrations.

P–3 SYSTEM INTERFACES

P–3.1 MECHANICAL

The mechanical hardware-to-hardware interfaces include:

a. Cables

b. Processor Unit (PU)

c. Display Unit (DU)

d. Keyboard Unit (KU)

P–3.2 CABLE INTERFACES

Figure P-1 illustrates a block diagram of the interface between the FBCB2 equipment and the M1031 CUCV (Platform). Figure P-1 also illustrates the signal and control interfaces including the terminal connector labels (e.g., P1, P2). The purpose of each cable is listed below:

Cable Name	Purpose
W1–Cable	Supplies vehicle power (28 VDC) to the AN/UYK-128(V) computer and its subassemblies.
W2–Cable	Supplies power and signals to the Display Unit (DU) and Keyboard Unit (KU). Returns Man Machine Interface (MMI) information from the KU to the Processor Unit (PU).
W3–Cable	The Serial Interface Adapter Device (SIAD) is a conduit assembly that breaks out each of the serial interface ports to a connector.
W3P–Cable	Collects position and time information from the PLGR.
W3N–Cable	Provides duplex communication between the PU, Internet Controller (INC) and radios.
W4–Cable	Audio cable (This cable is not used in this platform).
W5–Cable	The Expansion Interface Adapter Device (EIAD) is connected to the Universal Serial Bus (USB) connector only when this vehicle is to be used in a Tactical Operations Center (TOC) setup. When used in this configuration, the EIAD is connected between the PU J5 connector and local router.
Ground Strap	Provides safety ground for the PU.
Ground Strap	Provides safety ground for the DU.

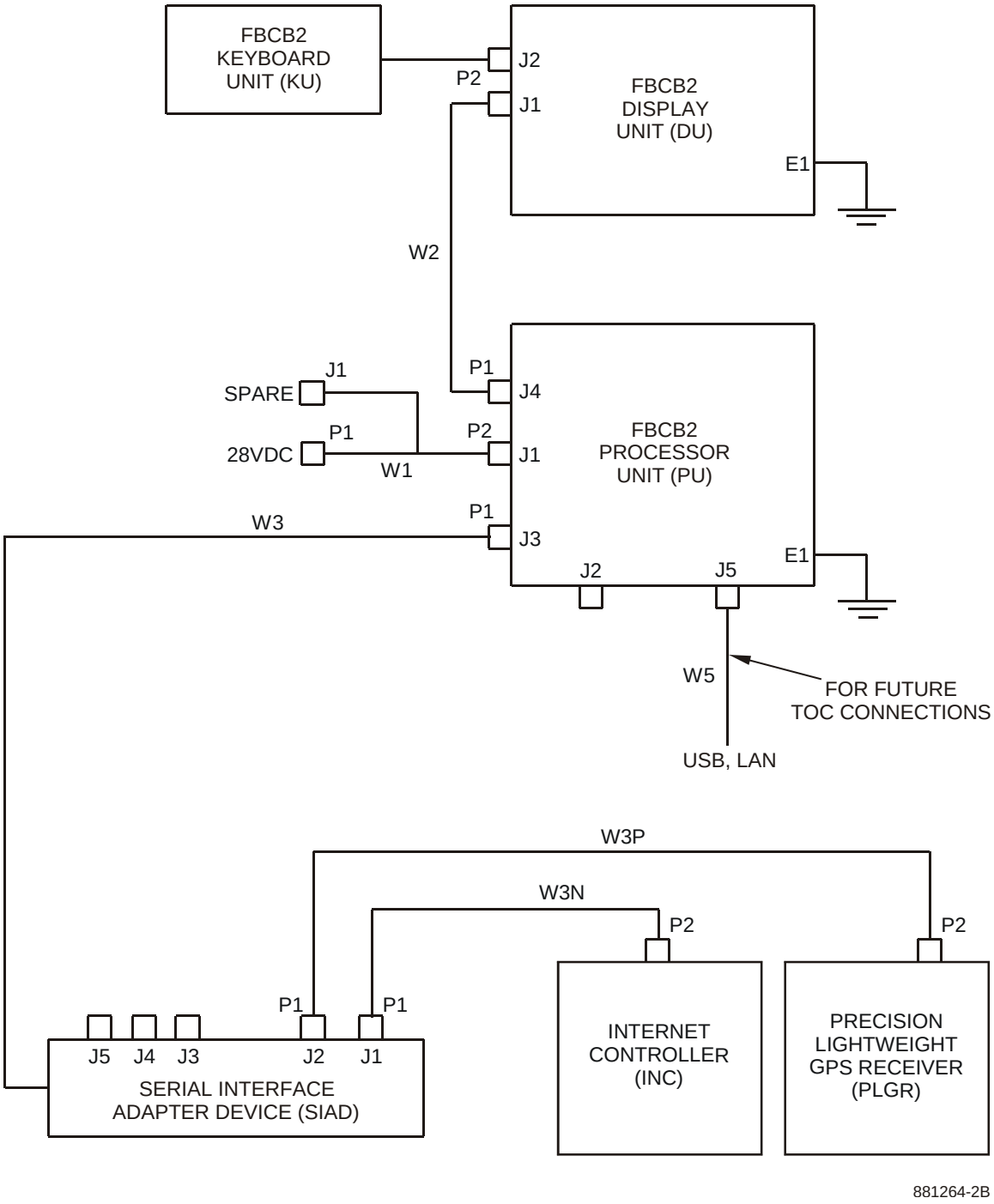

Figure P-1. Equipment Interface Block Diagram

P–4 COMPONENT LOCATION

P–4.1 GENERAL LOCATION

Figure P-2 shows the relative locations of the AN/UYK-128(V) system equipment and mounting components in the M1031 CUCV.

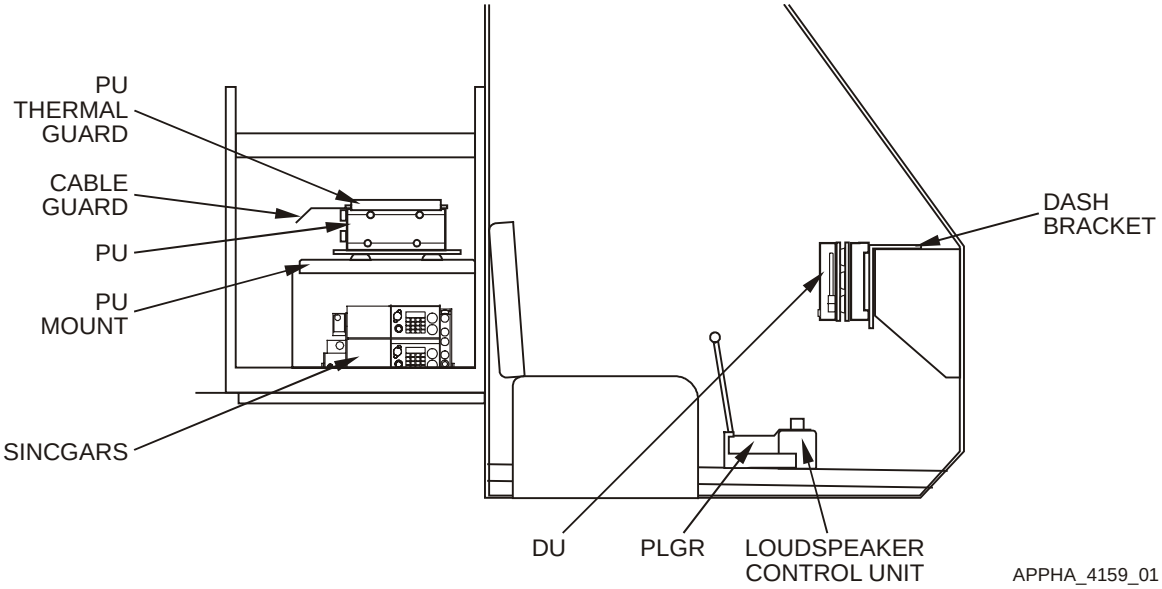

Figure P-2. Relative Component Locations

P–4.2 MOUNTING

Figure P-3 and Figure P-4 illustrate different views of the DU and KU stowage box mounting on a display mounting bracket located between the driver and passenger, with the forward part of the bracket against the dashboard.

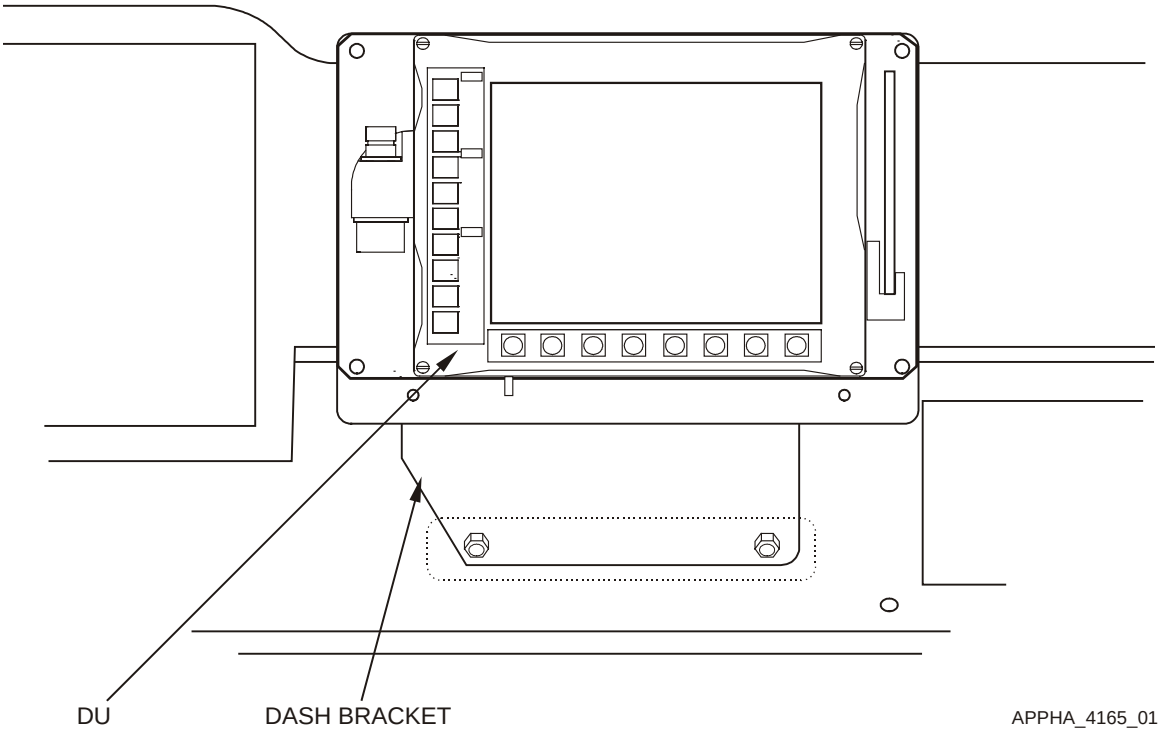

Figure P-3. Front View-DU Mounting

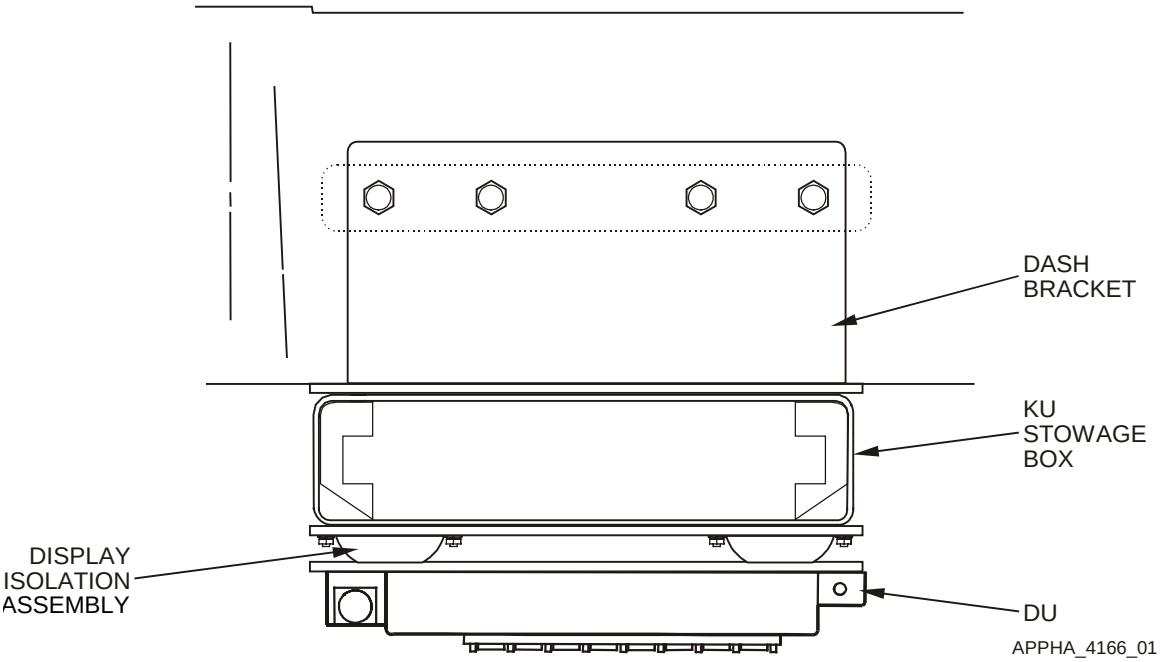

Figure P-4. Top Down View-DU and KU Stowage Box Mounting

P–5 PLATFORM-UNIQUE TROUBLESHOOTING

No unique troubleshooting procedures are required for this vehicle.

P–6 REMOVAL/REPLACEMENT IN THE PLATFORM

Most installations must be tailored to the platform. Cables and brackets are unique to the installation. Before a part or assembly is removed from a vehicle, fill out a “Maintenance Request” DA Form 2407. One copy of this completed form must remain with the vehicle and the remaining copies must be kept with the failed component. To prove the operability of the system after an item is replaced, perform the system Functional Check.

P–6.1 FUNCTIONAL CHECK

P–6.1.1 POWER UP

Power up and initialize all interface equipment and the AN/UYK-128(V) In Accordance With (IAW) the Operator’s Manual TM 11-7010-326-10, or Pocket Guide TB 11-7010-326-10.

P–6.1.2 VERIFICATION

NOTE

Observe that the Display Unit PWR, DISP and CPU green LED lights are lit.

a. Observe that the PLGR synchronizes with PU, indicated by the PLGR dialog box showing green.

b. Observe that the Router synchronizes with the PU, indicated by the Router dialog box showing green.

c. At the Session Manager screen, select OPS button to display the OPS screen.

d. Verify the GPS status is either green or amber on the Classification/Status Bar.

e. Verify the Communications status is either green or amber on the Classification/Status Bar.

P–6.1.3 POWER DOWN

Power down all interface equipment and the AN/UYK-128(V) IAW the Operator’s Manual TM 11-7010-326-10, or Pocket Guide TB 11-7010-326-10.

P–6.2 REMOVE/REPLACE W1 POWER CABLE

Refer to Figure P-5.

P–6.2.1 REMOVE W1 POWER CABLE

WARNING

Before conducting maintenance involving the removal and replacement of system components, ensure that all power to the FBCB2 system is off (including power from the vehicle). Failure to comply with warning may result in equipment damage or injury to personnel.

a. Power down AN/UYK-128(V) system IAW Operator's Manual TM 11-7010-326-10, or Pocket Guide TB 11-7010-326-10.

b. Power down SINCGARS IAW TM 11-5820-890-10-8.

c. Release and slide SINCGARS Vehicular Amplifier-Adapter (VAA) (AM 7239/VRC) forward from Mounting Base (MB) (MT-6352/VRC) to access W1-P1 cable connector IAW TM 11-5820-890-10-8.

d. Disconnect W1-P1 cable connector from SINCGARS MB A4-J2 connector.

e. Disconnect W1-J1 cable connector from power interface cable (if applicable).

f. Disconnect W1-P2 cable connector from PU J1 connector.

g. Install protective cap on PU J1 connector.

NOTE

Note cable routing and tie-wrap locations before removing cable or tie-wraps.

h. Remove tie-wraps securing W1 cable using diagonal wire cutters.

i. Remove W1 power cable (3).

P–6.2.2 REPLACE W1 POWER CABLE

a. Route W1 power cable (3).

b. Remove protective cap from PU J1 connector.

c. Connect W1-P2 cable connector to PU J1 connector.

d. Connect W1-J1 cable connector to power interface cable (if applicable).

e. Connect W1-P1 cable connector to SINCGARS Mounting Base (MB) (MT-6352A/VRC) A4-J2 connector.

f. Secure W1 cable using tie-wraps, as applicable.

g. Dress tie-wraps using diagonal wire cutters.

h. Slide SINCGARS Vehicular Amplifier-Adapter (VAA) (AM 7239/VRC) back into SINCGARS MB and fasten IAW TM 11-5820-890-10-8.

i. Perform Functional Check IAW paragraph P–6.1.

P–6.3 REMOVE/REPLACE W2 DISPLAY CABLE

Refer to Figure P-5.

P–6.3.1 REMOVE W2 DISPLAY CABLE

WARNING

Before conducting maintenance involving the removal and replacement of system components, ensure that all power to the FBCB2 system is off (including power from the vehicle). Failure to comply with warning may result in equipment damage or injury to personnel.

a. Power down AN/UYK-128(V) system IAW Operator's Manual TM 11-7010-326-10, or Pocket Guide TB 11-7010-326-10.

b. Disconnect W2-P1 cable connector from PU J4 connector.

c. Install protective cap on PU J4 connector.

d. Disconnect W2-P2 cable connector from display J1 connector.

e. Install protective cap on display J1 connector.

NOTE

Note cable routing and tie-wrap locations before removing cable or tie-wraps.

f. Remove tie-wraps from W2 cable and ground strap using diagonal wire cutters.

g. Remove W2 display cable (1).

P–6.3.2 REPLACE W2 DISPLAY CABLE

a. Route W2 cable (1) from DU, under dashboard and to rear through bulkhead as originally positioned.

b. Remove protective cap from display J1 connector.

c. Connect W2-P2 cable connector to display J1 connector.

d. Remove protective cap from PU J4 connector.

e. Connect W2-P1 cable connector to PU J4 connector.

f. Secure W2 cable and ground strap using tie-wraps.

g. Dress tie-wraps using diagonal wire cutters.

h. Perform Functional Check IAW paragraph P–6.1.

P–6.4 REMOVE/REPLACE W3 SERIAL INTERFACE ADAPTER DEVICE (SIAD)

Refer to Figure P-5.

P–6.4.1 REMOVE W3 SERIAL INTERFACE ADAPTER DEVICE (SIAD)

WARNING

Before conducting maintenance involving the removal and replacement of system components, ensure that all power to the FBCB2 system is off (including power from the vehicle). Failure to comply with warning may result in equipment damage or injury to personnel.

a. Power down AN/UYK-128(V) system IAW Operator's Manual TM 11-7010-326-10, or Pocket Guide TB 11-7010-326-10.

b. Disconnect W3N-P1 INC cable connector from W3 SIAD J1 connector.

c. Disconnect W3P-P1 PLGR cable connector from W3 SIAD J2 connector.

d. Disconnect W3 SIAD-P1 cable connector from PU J3 connector.

e. Install protective cap on PU J3 connector.

NOTE

Note cable routing and tie-wrap locations before removing cable or tie-wraps.

f. Remove tie-wraps securing W3 SIAD using diagonal wire cutters.

g. Remove W3 SIAD (2).

P–6.4.2 REPLACE W3 SERIAL INTERFACE ADAPTER DEVICE (SIAD)

a. Route W3 SIAD (2) into original position.

b. Remove protective cap from PU J3 connector.

c. Connect W3 SIAD-P1 cable connector to PU J3 connector.

d. Connect W3P-P1 PLGR cable connector to W3 SIAD J2 connector.

e. Connect W3N-P1 INC cable connector to W3 SIAD J1 connector.

f. Secure W3 SIAD using tie-wraps.

g. Dress tie-wraps using diagonal wire cutters.

h. Perform Functional Check IAW paragraph P–6.1.

P–6.5 REMOVEL/REPLACE W3P PLGR CABLE

Refer to Figure P-5.

P–6.5.1 REMOVE W3P PLGR CABLE

WARNING

Before conducting maintenance involving the removal and replacement of system components, ensure that all power to FBCB2 system is off (including power from the vehicle). Failure to comply with warning may result in equipment damage or injury to personnel.

a. Power down AN/UYK-128(V) system IAW Operator's Manual TM 11-7010-326-10, or Pocket Guide TB 11-7010-326-10.

b. Disconnect W3P-P1 cable connector from W3 SIAD J2 connector.

c. Disconnect W3P-P2 cable connector from PLGR J2 connector using offset flat-tip screwdriver.

NOTE

Note cable routing and tie-wrap locations before removing cable or tie-wraps.

d. Remove tie-wraps securing W3P cable using diagonal wire cutters.

e. Remove W3P cable (4).

P–6.5.2 REPLACE W3P PLGR CABLE

a. Route W3P cable (4) from PLGR, under seat and to rear through bulkhead, as originally positioned.

b. Connect W3P-P2 cable connector to PLGR J2 connector using offset flat-tip screwdriver.

c. Connect W3P-P1 cable connector to W3 SIAD J2 connector.

d. Secure W3P cable using tie-wraps.

e. Dress tie-wraps using diagonal wire cutters.

f. Perform Functional Check IAW paragraph P–6.1.

P–6.6 REMOVE/REPLACE W3N INC CABLE

Refer to Figure P-5.

P–6.6.1 REMOVE W3N INC CABLE

WARNING

Before conducting maintenance involving the removal and replacement of system components, ensure that all power to the FBCB2 system is off (including power from the vehicle). Failure to comply with warning may result in equipment damage or injury to personnel.

a. Power down AN/UYK-128(V) system IAW Operator's Manual TM 11-7010-326-10, or Pocket Guide TB 11-7010-326-10.

b. Disconnect W3N-P1 cable connector from W3 SIAD J1 connector.

c. Disconnect W3N-P2 cable connector from SINCGARS INC A2-J6 connector.

NOTE

Note cable routing and tie-wrap locations before removing cable or tie-wraps.

d. Remove tie-wraps securing W3N cable using diagonal cutters.

e. Remove W3N cable (5).

P–6.6.2 REPLACE W3N INC CABLE

a. Route W3N cable (5).

b. Connect W3N-P2 cable connector to SINCGARS INC A2-J6 connector.

c. Connect W3N-P1 cable connector to W3 SIAD J1 connector.

d. Secure W3N cable using tie-wraps.

e. Dress tie-wraps using diagonal wire cutters.

f. Perform Functional Check IAW paragraph P–6.1.

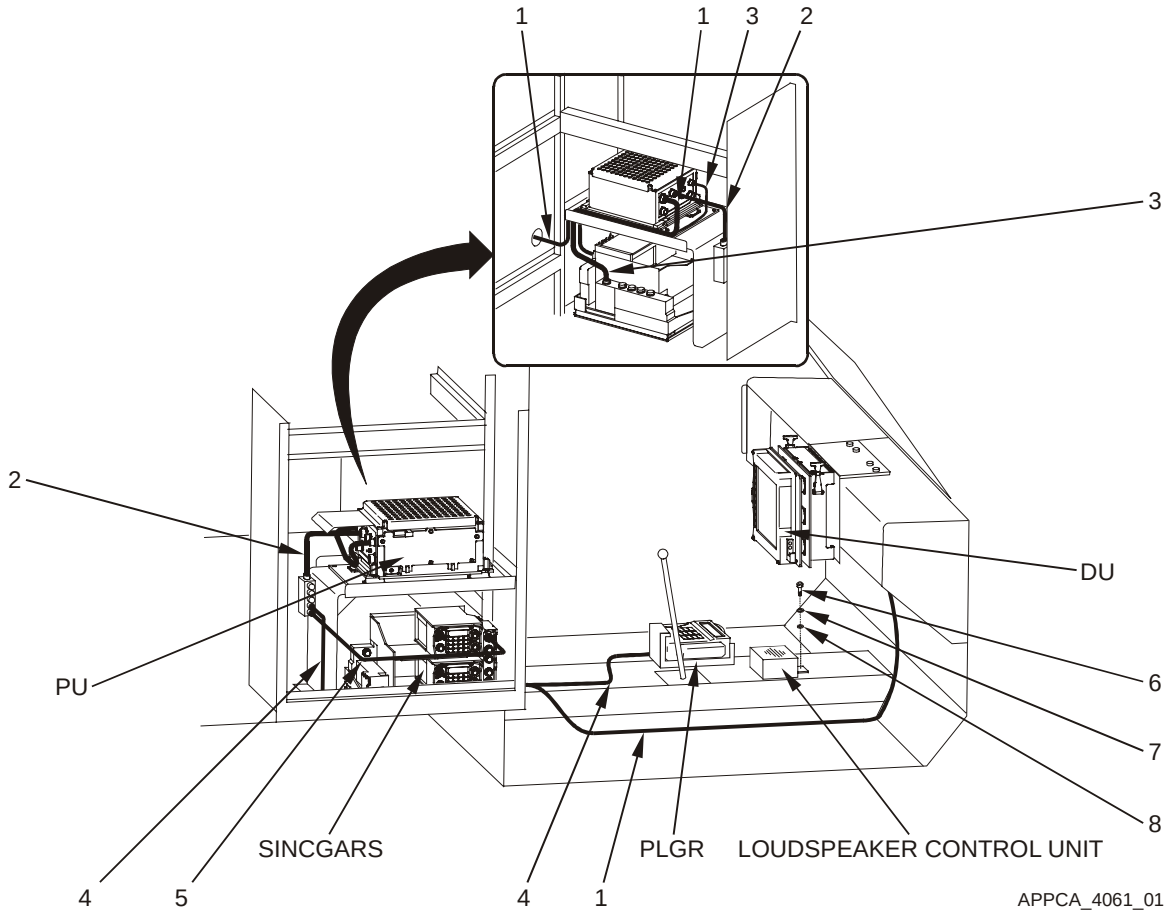

Figure P-5. Cable Run

Key and Parts List for Figure P-5

ITEM NO.	NOMENCLATURE	CAGE CODE	PART NUMBER	NSN	QTY	SMR
1	Cable Assembly W2	0J198	881327-3	5995-01-478-4877	1	PAODD
2	Adapter Assy SIAD W3	0J198	881331-1	4920-01-478-3722	1	PAODD
3	Cable Assembly W1	0J198	861880-4	5995-01-478-4951	1	PAODD
4	Cable Assembly W3P	0J198	881335-3	5995-01-478-4898	1	PAODD
5	Cable Assembly W3N	0J198	881336-1	5995-01-478-4913	1	PAODD
6	Screw, Sheet Metal	39428	90286A245		4	PAOZZ
7	Washer, Lock	96906	MS35338-43	5310-00-045-3296	6	PAOZZ
8	Washer, Flat	96906	MS27183-8	5310-00-809-8546	6	PAOZZ
--	Strap, Tie Down, Elect	39428	7130K31		A/R	PAOZZ
--	Holder, Cable, Tie 2w	39428	7566K27		A/R	PAOZZ

P–6.7 REMOVE/REPLACE PU ISOLATION ASSEMBLY

Refer to Figure P-6.

NOTE

Ground straps are attached to components at one end (PU and DU) and a frame ground at the other end. Regardless of where the ground strap terminates, it is usually a burnished (void of paint) area. If the ground strap is removed from a burnished area, make sure to return it to the same burnished area. Where applicable, always connect the ground strap first when assembling, and disconnect the ground strap last when disassembling.

P–6.7.1 REMOVE PU ISOLATION ASSEMBLY

WARNING

Before conducting maintenance involving the removal and replacement of system components, ensure that all power to the FBCB2 system is off (including power from the vehicle). Failure to comply with warning may result in equipment damage or injury to personnel.

a. Power down AN/UYK-128(V) system IAW Operator's Manual TM 11-7010-326-10, or Pocket Guide TB 11-7010-326-10.

NOTE

Do not remove the Removable Hard Disk Drive Cartridge (RHDDC), locking bracket, or thermal guard (if installed) from PU.

b. Remove two pan head screws (2), lock washers (3) and flat washers (4) from cable guard (1) using a No. 2 cross-tip screwdriver.

c. Remove PU IAW Unit Maintenance Manual TM 11-7010-326-20&P, Chapter 2.

d. Remove one hex head screw (13), ground strap, flat washer (12), lock washer (11) and hex nut (10) from PU isolation assembly (9) bottom plate and PU mount bracket (14) using a 7/16" open-end wrench and 7/16" socket with ratchet.

e. Remove remaining three remaining hex head screws (13), flat washers (12), lock washers (11) and hex nuts (10) from PU isolation assembly (9) bottom plate and mount bracket (14) using a 7/16" open-end wrench and 7/16" socket with ratchet.

f. Remove PU isolation assembly (9) from mount bracket.

P–6.7.2 REPLACE PU ISOLATION ASSEMBLY

a. Align four holes in PU isolation assembly (9) bottom plate with PU mount bracket (14) installation holes.

NOTE

To ensure positive ground, PU ground strap must make direct contact with bare metal. Ensure PU ground strap is installed in its original location at the PU isolation assembly bottom plate mounting hole. Slip the ground strap on the mounting screw before installing flat washer and lock washer from bottom and tightening nut.

b. Install one hex head screw (13), ground strap, flat washer (12), lock washer (11) and hex nut (10) on PU isolation assembly (9) bottom plate and mount bracket (14) using a 7/16” socket with ratchet and 7/16” open-end wrench.

c. Install remaining three hex head screw (13), flat washers (12), lock washers (11) and hex nuts (10) on PU isolation assembly (9) bottom plate and mount bracket (14) using a 7/16” socket with ratchet and 7/16” open-end wrench.

d. Install PU IAW Unit Maintenance Manual TM 11-7010-326-20&P, Chapter 2.

e. Position cable guard (1) on PU and install two pan head screws (2), lock washers (3) and flat washers (4) using a No. 2 cross-tip screwdriver.

f. Perform Functional Check IAW paragraph P–6.1.

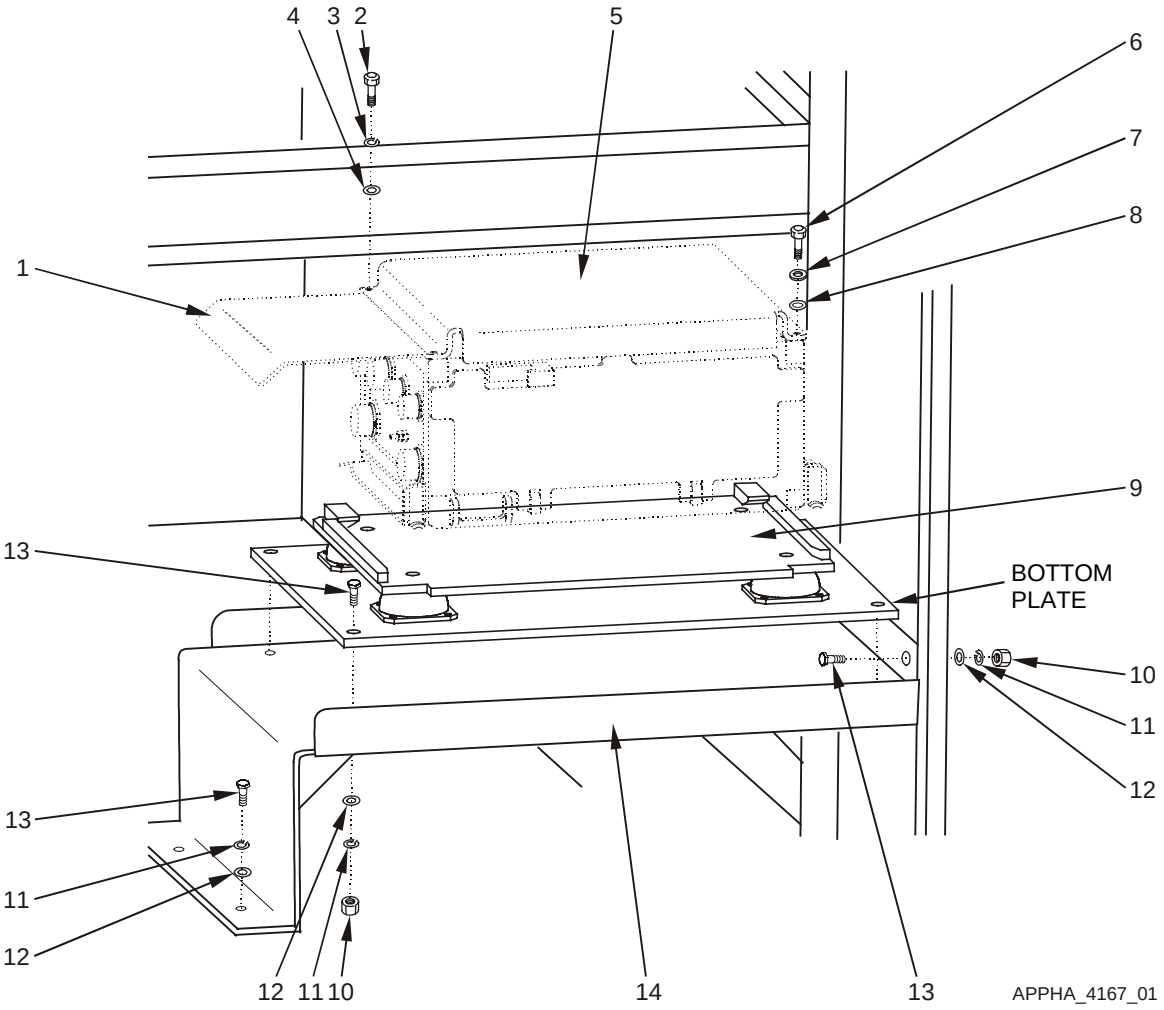

Figure P-6. Remove and Replace PU Isolation Assembly

Key and Parts List for Figure P-6

ITEM NO.	NOMENCLATURE	CAGE CODE	PART NUMBER	NSN	QTY	SMR
1	Bracket, Cable Guard	0J198	866029-1		1	XBOZZ
2	Screw, Machine	96906	MS35207-261	5305-00-990-6444	2	PAOZZ
3	Washer, Lock	96906	MS35338-43	5310-00-045-3296	6	PAOZZ
4	Washer, Flat	96906	MS27183-8	5310-00-809-8546	6	PAOZZ
--	Thermal Guard Assembly (if installed)	0J198	872860-1		1	XBOOO
5	Thermal Guard	0J198	872860-11		1	PAOZZ
6	Screw, Machine	96906	MS51958-63	5305-00-059-3659	4	PAOZZ
7	Grommet	63590	BG2903	5325-01-291-3383	4	PAOZZ
8	Retainer, (Bolt)	032U6	75-4119		4	PAOZZ
9	(PU isolation assembly) Plate, Resilient Mount PU	0J198	872826-1	5340-01-481-5742	1	PAODD
10	Nut, Plain, Hexagon	96906	MS35649-2252	5310-00-997-1888	8	PAOZZ
11	Washer, Lock	96906	MS35338-44	5310-00-582-5965	18	PAOZZ
12	Washer, Flat	96906	MS27183-10	5310-00-809-4058	18	PAOZZ
13	Screw, Cap, Hexagon	80204	B1821AH025C100N	5305-01-389-7984	15	PAOZZ
14	Bracket, PU Mount	0J198	866026-1		1	XBOZZ
--	Assembly, PU Lock	0J198	861865-1		1	XBOOO
--	Bracket, Locking	0J198	861871-1		1	XBOZZ
--	Screw	80205	MS35190-253	5305-00-059-4568	2	PAOZZ

P–6.8 REMOVE/REPLACE DU ISOLATION ASSEMBLY

Refer to Figure P-7.

NOTE

Ground straps are attached to components at one end (PU and DU) and a frame ground at the other end. Regardless of where the ground strap terminates, it is usually a burnished (void of paint) area. If the ground strap is removed from a burnished area, make sure to return it to the same burnished area. Where applicable, always connect the ground strap first when assembling, and disconnect the ground strap last when disassembling.

P–6.8.1 REMOVE DU ISOLATION ASSEMBLY

WARNING

Before conducting maintenance involving the removal and replacement of system components, ensure that all power to the FBCB2 system is off (including power from the vehicle). Failure to comply with warning may result in equipment damage or injury to personnel.

a. Power down AN/UYK-128(V) system IAW Operator's Manual TM 11-7010-326-10, or Pocket Guide TB 11-7010-326-10.

b. Remove DU IAW Unit Maintenance Manual TM 11-7010-326-20&P, Chapter 2.

NOTE

Note cable routing and tie-wrap locations before removing cable or tie-wraps.

c. Remove tie-wraps securing W2 display cable and ground strap to DU isolation assembly using diagonal wire cutters.

d. Remove four hex head screws (7), lock washers (4) and flat washers (5) from DU isolation assembly (1) bottom plate and dash bracket (2) using a 7/16" socket with ratchet.

e. Remove DU isolation assembly (1) from dash bracket (2).

P–6.8.2 REPLACE DU ISOLATION ASSEMBLY

a. Align four holes in DU isolation assembly (1) bottom plate with dash bracket (2) installation holes.

b. Install four hex head screws (7), lock washers (4) and flat washers (5) on DU isolation assembly (1) bottom plate and dash bracket (2) using a 7/16" socket with ratchet.

c. Secure W2 display cable and ground strap to DU isolation assembly (1) bottom plate using tie-wraps.

d. Dress tie-wrap using diagonal wire cutters.

e. Install DU IAW Unit Maintenance Manual TM 11-7010-326-20&P, Chapter 2.

f. Perform Functional Check IAW paragraph P–6.1.

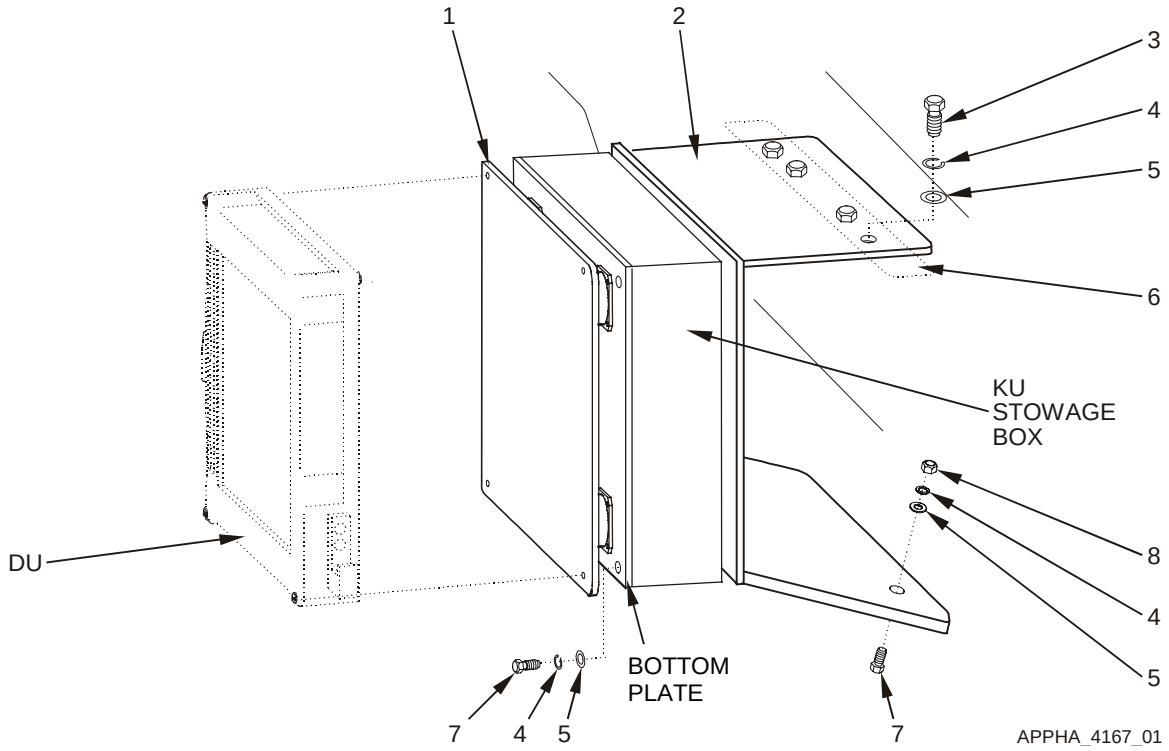

Figure P-7. Remove and Replace DU Isolation Assembly

Key and Parts List for Figure P-7

ITEM NO.	NOMENCLATURE	CAGE CODE	PART NUMBER	NSN	QTY	SMR
1	(DU isolation assembly) Plate, Resilient Mount DU	0J198	872870-1		1	PAODD
2	Bracket, Display Dash	0J198	866027-1		1	XBOZZ
3	Screw, Cap Hexagon	80204	B1821AH025C150N	5305-01-466-7243	4	PAOZZ
4	Washer, Lock	96906	MS35338-44	5310-00-582-5965	18	PAOZZ
5	Washer, Flat	96906	MS27183-10	5310-00-809-4058	18	PAOZZ
6	Bracket, Mounting,	0J198	866040-3		1	PAOZZ
7	Screw, Cap, Hexagon	80204	B1821AH025C100N	5305-01-389-7984	15	PAOZZ
8	Nut, Plain, Hexagon	96906	MS35649-2252	5310-00-997-1888	8	PAOZZ
--	Assembly, DU Lock	0J198	872843-1		1	XBOOO
--	Bracket, Locking	0J198	861871-3		1	XBOZZ
--	Screw	80205	MS35190-253	5305-00-059-4568	2	PAOZZ
--	Washer, Lock	96906	MS35338-42	5310-00-045-3299	2	PAOZZ

P–6.9 REMOVE/REPLACE KEYBOARD UNIT (KU) STOWAGE BOX

Refer to Figure P-8.

P–6.9.1 REMOVE KEYBOARD UNIT (KU) STOWAGE BOX

a. Remove keyboard from stowage box, if stowed.

b. Remove DU isolation assembly IAW paragraph P–6.8.1.

c. Loosen four KU stowage box captive screws (2) until the captive screws move freely using a No. 2 cross-tip screwdriver.

d. Remove KU stowage box (1) from dash bracket.

P–6.9.2 REPLACE KEYBOARD UNIT (KU) STOWAGE BOX

a. Align four KU stowage box captive screws with PU installation holes.

b. Tighten four captive screws (2) using a No. 2 cross-tip screwdriver.

c. Install DU isolation assembly IAW paragraph P–6.8.2.

g. Perform Functional Check IAW paragraph P–6.1.

d. Stow keyboard as required.

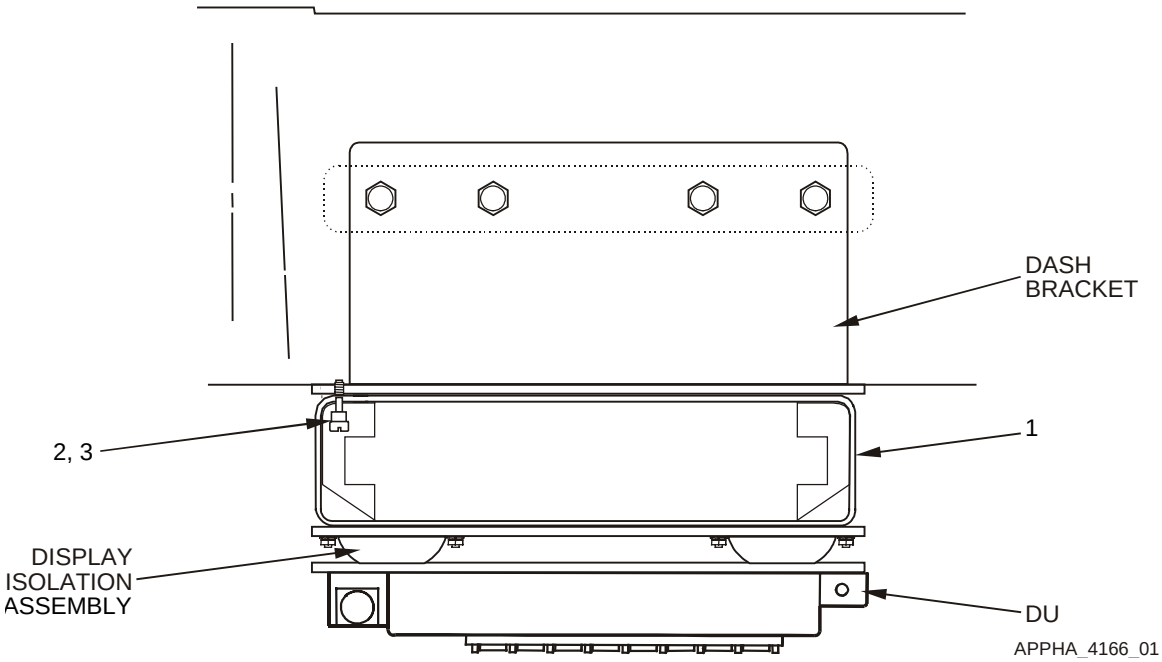

Figure P-8. Remove and Replace Keyboard Unit (KU) Stowage Box

Key and Parts List for Figure P-8

ITEM NO.	NOMENCLATURE	CAGE CODE	PART NUMBER	NSN	QTY	SMR
1	Box, KU Stowage	0J198	872845-1	2540-01-481-5744	1	PAODD
2	Screw, Captive Panel	57177	PH207-05SS1032		4	PAOZZ
3	Retainer, Panel Screw	57177	214-03SS10-32		4	PAOZZ
--	Case, Keyboard	0J198	872845-11		1	XBOOO
--	Bottom, Stowage Box	0J198	872845-12		1	XBOOO
--	Side Rail, Keybd Box	0J198	872845-13		1	XBOOO
--	Side Rail, Keybd Box	0J198	872845-14		1	XBOOO
--	Strip, Rubber	0J198	872845-17		1	XBOOO
--	Label, Keyboard Box	0J198	881323-1		1	PAOZZ
--	Screw, Pan Head	96906	MS35206-229	5305-00-984-4989	14	PAOZZ
--	Washer, Flat	96906	MS27183-5	5310-00-983-8483	16	PAOZZ
--	Washer, Lock	96906	MS35338-41	5310-00-045-4007	13	PAOZZ
--	Nut, Plain	96906	MS35649-262	5310-00-934-9747	3	PAOZZ
--	Rubber Edge Trim	39428	8507K16	5325-01-435-2840	9	PAOZZ
--	Adhesive			8040-00-664-4318		
--	Grip, Handle Assembly	0J198	861867-1		1	XBOOO
--	Grip, Handle Keybd	0J198	861869-1		1	XBOZZ
--	Screw, Machine	96906	MS35206-228	5305-00-984-4988	4	PAOZZ
--	Washer, Lock	96906	MS35338-41	5310-00-045-4007	4	PAOZZ
--	Tape, Shielding, Elect	39428	7648A34		1	XBOZZ

APPENDIX R

SUPPLEMENTARY INFORMATION FOR

M985/978/1074/1075/1120 HEMMT/PLS/LHS

TABLE OF CONTENTS

Page

R–1 GENERAL R–3

R–2 COMPONENT ITEM NUMBERS AND PART NUMBERS R–3

R–3 SYSTEM INTERFACES R–3

R–3.1 MECHANICAL R–3

R–3.2 CABLE INTERFACES R–4

R–4 COMPONENT LOCATION R–6

R–4.1 GENERAL LOCATION R–6

R–4.2 MOUNTING R–6

R–5 PLATFORM-UNIQUE TROUBLESHOOTING R–9

R–6 REMOVAL/REPLACEMENT IN THE PLATFORM R–9

R–6.1 FUNCTIONAL CHECK R–9

R–6.2 REMOVE/REPLACE W1 POWER CABLE R–10

R–6.3 REMOVE/REPLACE W2 DISPLAY CABLE R–11

R–6.4 REMOVE/REPLACE W3 SERIAL INTERFACE ADAPTER DEVICE (SIAD) R–12

R–6.5 REMOVE/REPLACE W3P PLGR CABLE R–13

R–6.6 REMOVE/REPLACE W3N INC CABLE R–14

R–6.7 REMOVE/REPLACE PU ISOLATION ASSEMBLY R–16

R–6.8 REMOVE/REPLACE PU MOUNTING BRACKET R–17

R–6.9 REMOVE/REPLACE DU ISOLATION ASSEMBLY R–20

R–6.10 REMOVE/REPLACE RAM-BALL ASSEMBLY R–23

R–6.11 REMOVE/REPLACE DISPLAY BRACKET ASSEMBLY R–25

R–6.12 REMOVE/REPLACE KEYBOARD UNIT (KU) STOWAGE BOX R–26

R–6.13 REMOVE/REPLACE KEYBOARD UNIT (KU) STOWAGE BOX DOOR LATCHES R–28

LIST OF ILLUSTRATIONS

Page
Figure R-1. Equipment Interface Block Diagram R–5
Figure R-2. Relative Component Locations R–6
Figure R-3. PU Mounting From Under-Side of Glove Box R–7
Figure R-4. Display Mounting Components R–8
Figure R-5. Cable Run R–15
Figure R-6. Remove and Replace PU Isolation Assembly and PU Mount Bracket R–18
Figure R-7. Remove and Replace DU Isolation Assembly and RAM-Ball Assembly R–22
Figure R-8. Remove and Replace Display Bracket R–25
Figure R-9. Remove and Replace Keyboard Stowage Box Mounted On Vehicle R–27
Figure R-10. Remove and Replace Keyboard Unit (KU) Stowage Box Door Latches R–29

R–1 GENERAL

This appendix describes the interfaces between the FBCB2 equipment and the following: HEMMT, M1074/1075 PLS (Palletized Load System) and M1120 LHS (Load Handing System). This appendix also identifies the component parts of the HEMMT, M1074/1075 PLS and M1120 LHS platform installation kit and details the removal and replacement procedures particular to the HEMMT, M1074/1075 PLS and M1120 LHS.

R–2 COMPONENT ITEM NUMBERS AND PART NUMBERS

Key and Parts List tables contained in the Removal and Replacement section of this Appendix serve a dual purpose. Use the Item Numbers in the Key to identify components and attaching hardware shown in the Figures illustrating the tasks. The nomenclature and part number for the hardware and equipment mounting components of the installation kit also are keyed to the Item Numbers in the tables. Additional parts ordering information, such as Contractor and Government Entity code (CAGE); National Stock Number (NSN); quantity; and Source, Maintenance and Recoverability (SMR) codes, are provided. The Key and Parts List tables follow the task illustrations.

R–3 SYSTEM INTERFACES

R–3.1 MECHANICAL

The mechanical hardware-to-hardware interfaces include:

a. Cables

b. Processing Unit (PU)

c. Display Unit (DU)

d. Keyboard Unit (KU)

R–3.2 CABLE INTERFACES

Figure R-1 illustrates a block diagram of the interface between the FBCB2 equipment and the HEMMT/PLS/LHS platforms. Figure R-1 also illustrates the signal and control interfaces along with the terminal connector labels (e.g., P1, P2). The purpose of each cable is listed below:

Cable Name	Purpose
W1–Cable	Supplies vehicle power to the AN/UYK-128(V) computer and its subassemblies.
W2–Cable	Supplies power and signals to the Display Unit (DU) and Keyboard Unit (KU). Returns Man Machine Interface (MMI) information from the KU to the Processor Unit (PU).
W3–Cable	Serial Interface Adapter Device (SIAD) is a conduit assembly that breaks out each of the serial interface ports to a connector.
W3P–Cable	Collects position and time information from the PLGR.
W3N–Cable	Provides duplex communication between the PU, Internet Controller (INC) and radios.
W4–Cable	Audio cable (not used in this platform).
W5–Cable	Expansion Interface Adapter Device (EIAD) is connected to the Universal Serial Bus (USB) connector only when this vehicle is to be used in a Tactical Operations Center (TOC) setup. When used in this configuration, it is connected between the PU J5 connector and local router.
Ground Strap	Provides safety ground for the PU.
Ground Strap	Provides safety ground for the DU.

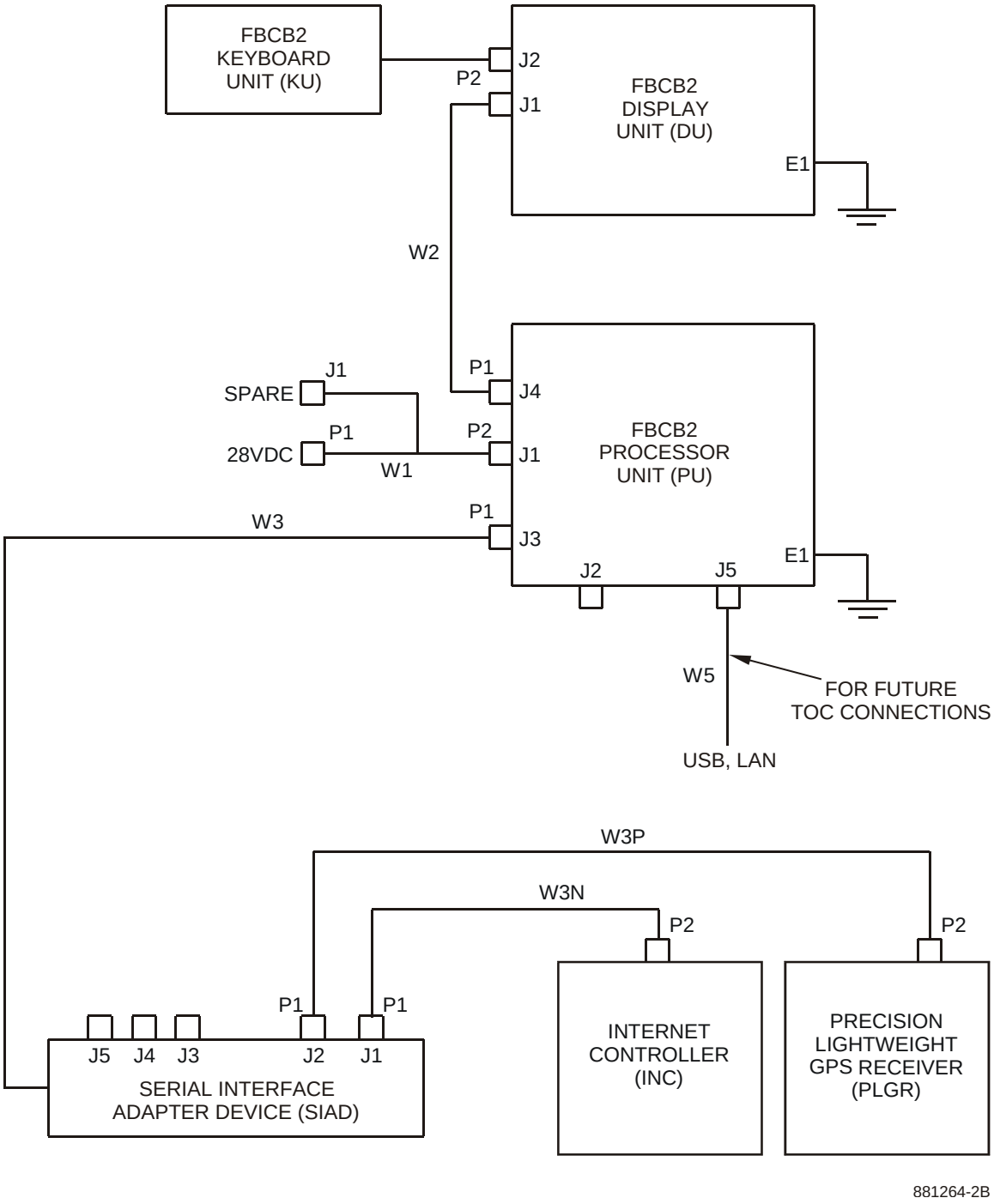

Figure R-1. Equipment Interface Block Diagram

R–4 COMPONENT LOCATION

R–4.1 GENERAL LOCATION

Figure R-2 shows the relative locations of the FBCB2 computer equipment and mounting components in the cab of the HEMMT, M1074/1075 PLS and M1120 LHS vehicle.

R–4.2 MOUNTING

The DU is ceiling mounted between the passenger and driver. The SINCGARS, PLGR and KU are mounted on the bench between the passenger and driver. The Processor Unit (PU) is mounted under the glove box on the passenger side.

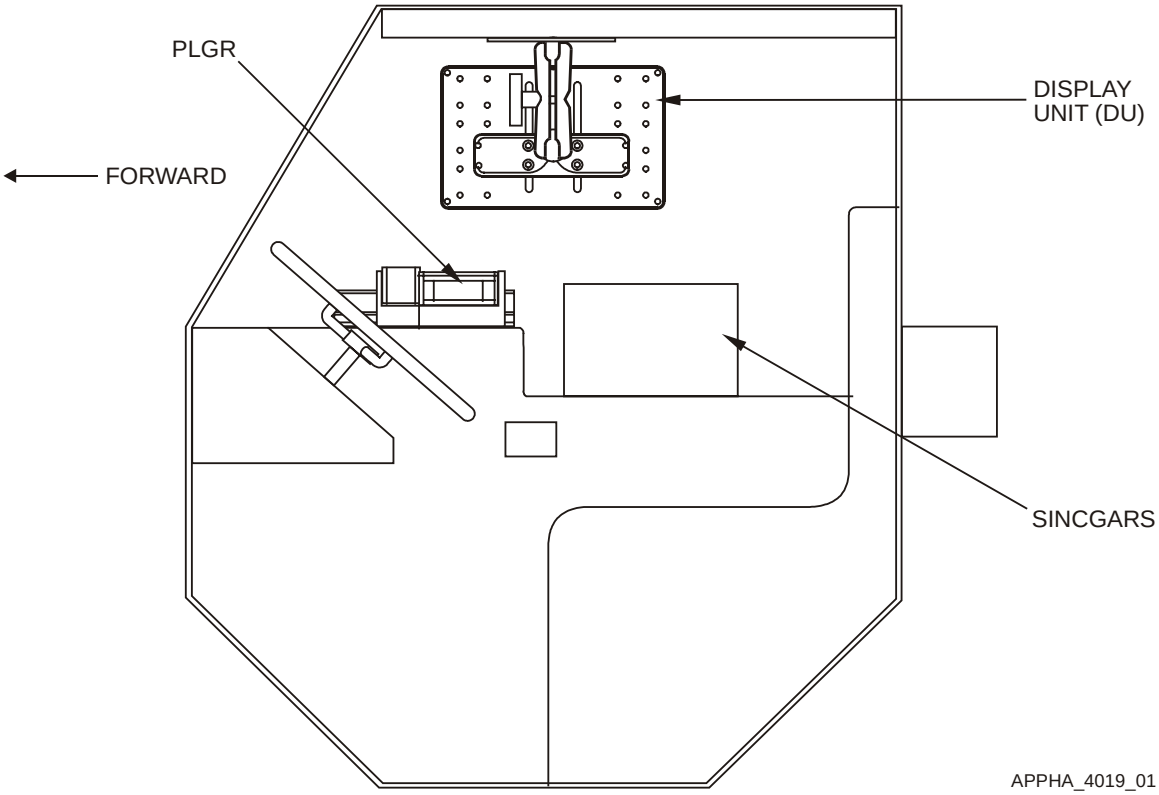

Figure R-2. Relative Component Locations

R–4.2.1 PU MOUNTING

Refer to Figure R-3.

The Processor Unit (PU) is mounted under the glove box on the passenger side.

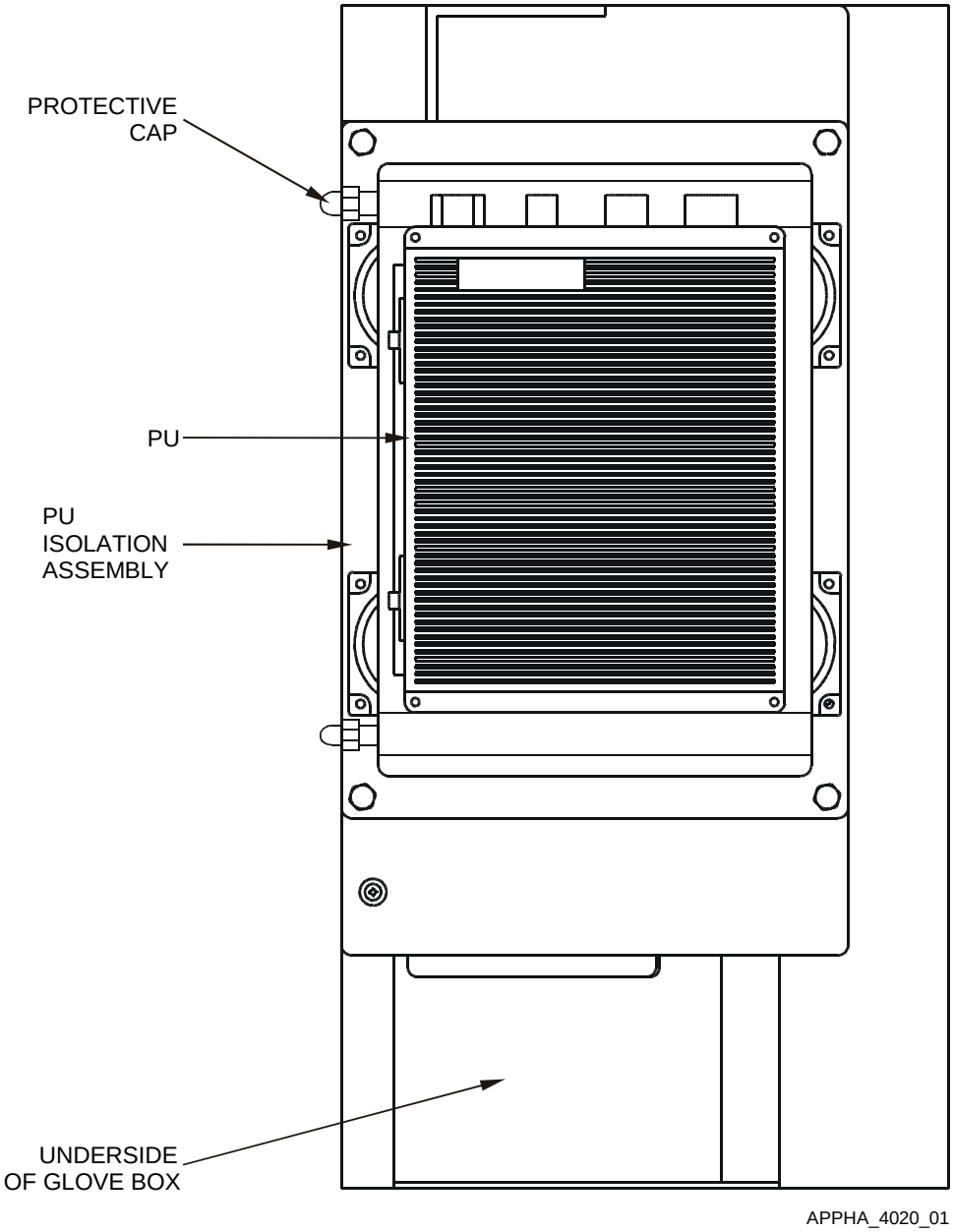

Figure R-3. PU Mounting From Under-Side of Glove Box

R–4.2.2 DU MOUNTING

Refer to Figure R-4.

The Display Unit (DU) is ceiling mounted between the passenger and driver.

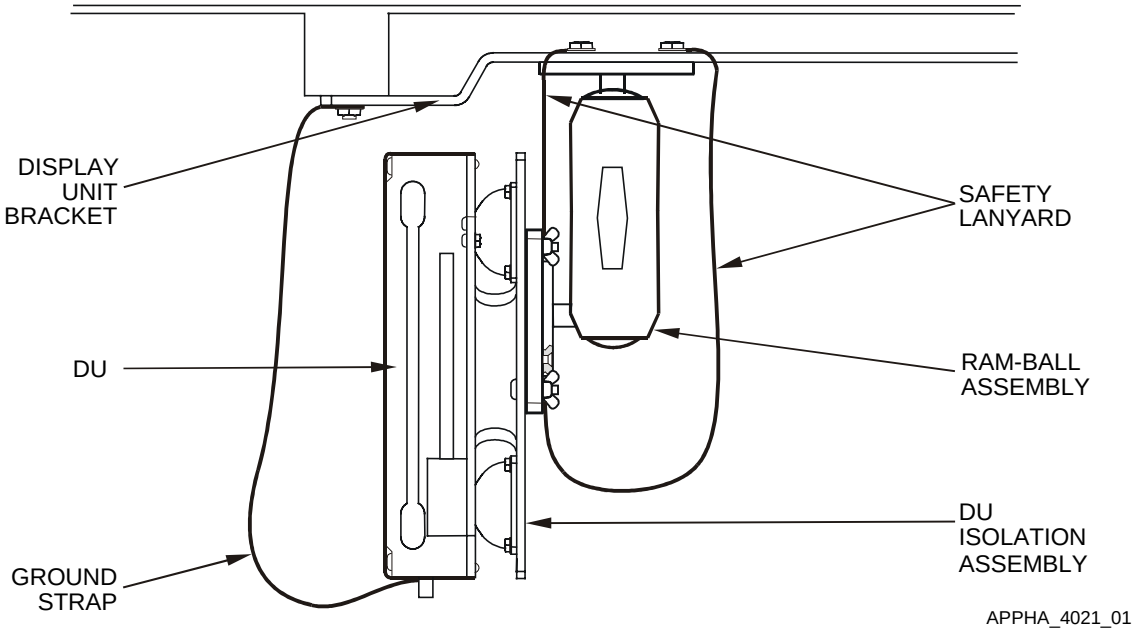

Figure R-4. Display Mounting Components

R–5 PLATFORM-UNIQUE TROUBLESHOOTING

There are no unique troubleshooting procedures for this vehicle.

R–6 REMOVAL/REPLACEMENT IN THE PLATFORM

Most installations must be tailored to the platform. Cables and brackets are unique to the installation. Before a part or assembly is removed from a vehicle, fill out a “Maintenance Request” DA Form 2407. One copy of this completed form must remain with the vehicle and the remaining copies must be kept with the failed component. To prove the operability of the system after an item is replaced, perform the system Functional Check.

R–6.1 FUNCTIONAL CHECK

R–6.1.1 POWER UP

Power up and initialize all interface equipment and the AN/UYK-128(V) In Accordance With (IAW) the Operator’s Manual TM 11-7010-326-10, or Pocket Guide TB 11-7010-326-10.

R–6.1.2 VERIFICATION

NOTE

Observe that the Display Unit PWR, DISP and CPU green LED lights are lit.

a. Observe that the PLGR synchronizes with PU, indicated by the PLGR dialog box showing green.

b. Observe that the Router synchronizes with the PU, indicated by the Router dialog box showing green.

c. At the Session Manager screen, select OPS button to display the OPS screen.

d. Verify the GPS status is either green or amber on the Classification/Status Bar.

e. Verify the Communications status is either green or amber on the Classification/Status Bar.

R–6.1.3 POWER DOWN

Power down all interface equipment and the AN/UYK-128(V) IAW the Operator’s Manual TM 11-7010-326-10, or Pocket Guide TB 11-7010-326-10.

R–6.2 REMOVE/REPLACE W1 POWER CABLE

Refer to Figure R-5

R–6.2.1 REMOVE W1 POWER CABLE

WARNING

Before conducting maintenance involving the removal and replacement of system components, ensure that all power to the FBCB2 system is off (including power from the vehicle). Failure to comply with warning may result in equipment damage or injury to personnel.

a. Power down AN/UYK-128(V) system IAW Operator's Manual TM 11-7010-326-10, or Pocket Guide TB 11-7010-326-10.

b. Power down SINCGARS IAW TM 11-5820-890-10-8.

c. Unlatch and slide the Vehicle Amplifier-Adapter (VAA) (AM-7239/VRC) forward from SINCGARS Mounting Base (MB) to allow access to W1 cable connector IAW the TM 11-5820-890-10-8.

d. Disconnect W1-P1 cable connector from the SINCGARS Mounting Base (MB) (MT-6352/VRC) A4-J2 connector.

e. Disconnect W1-P2 cable connector from PU J1 connector.

f. Install protective cap on PU J1 connector.

NOTE

Note cable routing and tie-wrap locations before removing cable or tie-wraps.

g. Remove tie-wraps securing W1 cable using diagonal wire cutters.

h. Remove W1 power cable (4).

R–6.2.2 REPLACE W1 POWER CABLE

a. Route W1 power cable (4).

b. Remove protective cap from PU J1 connector.

c. Connect W1-P2 cable connector to PU J1 connector.

d. Connect W1-P1 cable connector to SINCGARS Mounting Base (MB) (MT-6352/VRC) A4-J2 connector.

e. Replace and secure Vehicular Amplifier-Adapter (VAA) (AM-7239/VRC) IAW the TM 11-5820-890-10-8.

f. Secure W1 cable using tie-wraps.

g. Dress tie-wraps using diagonal wire cutters.

h. Perform Functional Check IAW paragraph R–6.1.

R–6.3 REMOVE/REPLACE W2 DISPLAY CABLE

Refer to Figure R-5.

R–6.3.1 REMOVE W2 DISPLAY CABLE

WARNING

Before conducting maintenance involving the removal and replacement of system components, ensure that all power to the FBCB2 system is off (including power from the vehicle). Failure to comply with warning may result in equipment damage or injury to personnel.

a. Power down AN/UYK-128(V) system IAW Operator's Manual TM 11-7010-326-10, or Pocket Guide TB 11-7010-326-10.

b. Disconnect W2-P1 cable connector from PU J4 connector.

c. Install protective cap on PU J4 connector.

d. Disconnect W2-P2 cable connector from display J1 connector.

e. Install protective cap on display J1 connector.

NOTE

Note cable routing and tie-wrap locations before removing cable or tie-wraps.

f. Remove tie-wraps from W2 cable using diagonal wire cutters.

g. Remove cable clamps using 7/16" open-end wrench or No. 2 cross tip screwdriver, as necessary.

h. Remove W2 display cable (2).

R–6.3.2 REPLACE W2 DISPLAY CABLE

a. Route W2 display cable (2).

b. Remove protective cap from display J1 connector.

c. Connect W2-P2 cable connector to display J1 connector.

d. Remove protective cap from PU J4 connector.

e. Connect W2-P1 cable connector to PU J4 connector.

f. Install cable clamps using 7/16" open-end wrench or No. 2 cross tip screwdriver, as necessary.

g. Secure W2 cable using tie-wraps.

h. Dress tie-wraps using diagonal wire cutters.

i. Perform Functional Check IAW paragraph R–6.1.

R–6.4 REMOVE/REPLACE W3 SERIAL INTERFACE ADAPTER DEVICE (SIAD)

Refer to Figure R-5.

R–6.4.1 REMOVE W3 SERIAL INTERFACE ADAPTER DEVICE (SIAD)

WARNING

Before conducting maintenance involving the removal and replacement of system components, ensure that all power to the FBCB2 system is off (including power from the vehicle). Failure to comply with warning may result in equipment damage or injury to personnel.

a. Power down AN/UYK-128(V) system IAW Operator's Manual TM 11-7010-326-10, or Pocket Guide TB 11-7010-326-10.

b. Disconnect W3N-P1 cable connector from W3 SIAD J1 connector.

c. Disconnect W3P-P1 cable connector from W3 SIAD J2 connector.

d. Disconnect W3 SIAD-P1 cable connector from PU J3 connector.

e. Install protective cap on PU J3 connector.

NOTE

Note cable routing and tie-wrap locations before removing cable or tie-wraps.

f. Remove tie-wraps securing W3 SIAD using diagonal wire cutters.

g. Remove W3 SIAD (1).

R–6.4.2 REPLACE W3 SERIAL INTERFACE ADAPTER DEVICE (SIAD)

a. Route W3 SIAD (1) into original position.

b. Remove protective cap from PU J3 connector.

c. Connect W3 SIAD P1 cable connector to PU J3 connector.

d. Connect W3P-P1 cable connector to W3 SIAD J2 connector.

e. Connect W3N-P1 cable connector to W3 SIAD J1 connector.

f. Secure W3 SIAD using tie-wraps.

g. Dress tie-wraps using diagonal wire cutters.

h. Perform Functional Check IAW paragraph R–6.1.

R–6.5 REMOVE/REPLACE W3P PLGR CABLE

Refer to Figure R-5.

R–6.5.1 REMOVE W3P PLGR CABLE

WARNING

Before conducting maintenance involving the removal and replacement of system components, ensure that all power to FBCB2 system is off (including power from the vehicle). Failure to comply with warning may result in equipment damage or injury to personnel.

a. Power down AN/UYK-128(V) system IAW Operator's Manual TM 11-7010-326-10, or Pocket Guide TB 11-7010-326-10.

b. Disconnect W3P-P1 cable connector from W3 SIAD J2 connector.

c. Remove PLGR from mount.

d. Disconnect W3P-P2 cable connector from PLGR J2 connector using offset flat screwdriver.

NOTE

Note cable routing and tie-wrap locations before removing cable or tie-wraps.

e. Remove tie-wraps securing W3P cable using diagonal wire cutters.

f. Remove W3P cable (3).

R–6.5.2 REPLACE W3P PLGR CABLE

a. Route W3P cable (3).

b. Connect W3P-P2 cable connector to PLGR J2 connector using offset flat screwdriver.

c. Install PLGR in mount.

d. Connect W3P-P1 cable connector to W3 SIAD J2 connector.

e. Secure W3P cable using tie-wraps.

f. Dress tie-wraps using diagonal wire cutters.

g. Perform Functional Check IAW paragraph R–6.1.

R–6.6 REMOVE/REPLACE W3N INC CABLE

Refer to Figure R-5.

R–6.6.1 REMOVE W3N INC CABLE

WARNING

Before conducting maintenance involving the removal and replacement of system components, ensure that all power to the FBCB2 system is off (including power from the vehicle). Failure to comply with warning may result in equipment damage or injury to personnel.

a. Power down AN/UYK-128(V) system IAW Operator's Manual TM 11-7010-326-10, or Pocket Guide TB 11-7010-326-10.

b. Disconnect W3N-P1 cable connector from W3 SIAD J1 connector.

c. Disconnect W3N-P2 cable connector from SINCGARS INC J6 connector.

NOTE

Note cable routing and tie-wrap locations before removing cable or tie-wraps.

d. Remove tie-wraps securing W3N cable using diagonal cutters.

e. Remove W3N cable (5).

R–6.6.2 REPLACE W3N INC CABLE

a. Route W3N cable (5).

b. Connect W3N-P2 cable connector to SINCGARS INC J6 connector.

c. Connect W3N-P1 cable connector to W3 SIAD J1 connector.

d. Secure W3N cable using tie-wraps.

e. Dress tie-wraps using diagonal wire cutters.

f. Perform Functional Check IAW paragraph R–6.1.

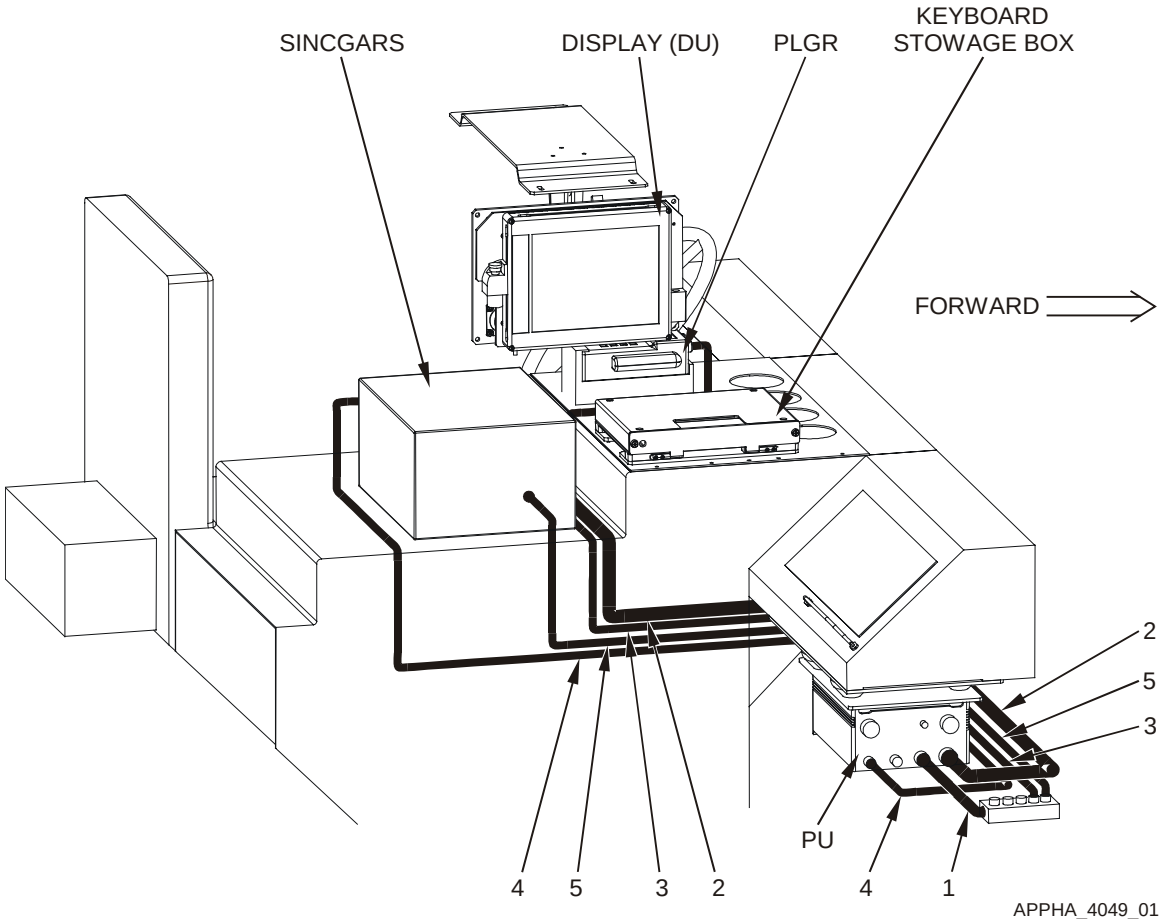

Figure R-5. Cable Run

Key and Parts List for Figure R-5

ITEM NO.	NOMENCLATURE	CAGE CODE	PART NUMBER	NSN	QTY	SMR
1	Adapter Assy SIAD W3	0J198	881331-1	4920-01-478-3722	1	PAODD
2	Cable Assembly W2	0J198	881327-4	5995-01-478-4880	1	PAODD
3	Cable Assembly W3P	0J198	881335-2	5995-01-478-4893	1	PAODD
4	Cable Assembly W1	0J198	866003-1	5995-01-478-4901	1	PAODD
5	Cable Assembly W3N	0J198	881336-2	5995-01-478-4922	1	PAODD
--	Strap, Tie Down, Elect	39428	7130K31		50	PAOZZ
--	Holder, Cable, Tie 2w	39428	7566K27		25	PAOZZ

R–6.7 REMOVE/REPLACE PU ISOLATION ASSEMBLY

Refer to Figure R-6.

NOTE

Ground straps are attached to components at one end (PU and DU) and a frame ground at the other end. Regardless of where the ground strap terminates, it is usually a burnished (void of paint) area. If the ground strap is removed from a burnished area, make sure to return it to the same burnished area. Where applicable, always connect the ground strap first when assembling, and disconnect the ground strap last when disassembling.

R–6.7.1 REMOVE PU ISOLATION ASSEMBLY

WARNING

Before conducting maintenance involving the removal and replacement of system components, ensure that all power to the FBCB2 system is off (including power from the vehicle). Failure to comply with warning may result in equipment damage or injury to personnel.

a. Power down AN/UYK-128(V) system IAW Operator's Manual TM 11-7010-326-10, or Pocket Guide TB 11-7010-326-10.

NOTE

Do not remove the Removable Hard Disk Drive Cartridge (RHDDC) or locking bracket from PU.

b. Remove PU IAW Unit Maintenance Manual TM 11-7010-326-20&P, Chapter 2.

c. Remove one hex head screw (3), ground strap, flat washer (8), lock washer (9) and hex nut (10) from PU isolation assembly (2) bottom plate using 7/16" socket with ratchet and 7/16" open-end wrench.

d. Remove remaining three hex head screws (3), flat washers (8), lock washers (9) and hex nuts (10) from PU isolation assembly (2) bottom plate using 7/16" socket with ratchet and 7/16" open-end wrench.

e. Remove PU isolation assembly (2) from PU mounting bracket (1).

R–6.7.2 REPLACE PU ISOLATION ASSEMBLY

a. Align four PU isolation assembly (2) bottom plate holes with installation holes in PU mounting bracket (1) holes.

NOTE

To ensure positive ground, PU ground strap must make direct contact with bare metal. Ensure PU ground strap is installed in its original location at the PU isolation assembly bottom plate mounting hole. Slip the ground strap, flat washer and lock washer on the mounting screw before installing and tightening nut.

b. Install one hex head screw (3), ground strap, flat washer (8), lock washer (9) and hex nut (10) on PU isolation assembly (2) bottom plate using 7/16” socket with ratchet and 7/16” open-end wrench.

c. Install remaining three hex head screws (3), flat washers (8), lock washers (9) and hex nuts (10) on PU isolation assembly (2) bottom plate using 7/16” socket with ratchet and 7/16” open-end wrench.

d. Replace PU IAW Unit Maintenance Manual TM 11-7010-326-20&P, Chapter 2.

e. Perform Functional Check IAW paragraph R–6.1.

R–6.8 REMOVE/REPLACE PU MOUNTING BRACKET

Refer to Figure R-6.

R–6.8.1 REMOVE PU MOUNTING BRACKET

WARNING

Before conducting maintenance involving the removal and replacement of system components, ensure that all power to the FBCB2 system is off (including power from the vehicle). Failure to comply with warning may result in equipment damage or injury to personnel.

a. Power down AN/UYK-128(V) system IAW Operator’s Manual TM 11-7010-326-10, or Pocket Guide TB 11-7010-326-10.

b. Remove PU isolation assembly IAW paragraph R–6.7.1.

c. Remove four machine bolts (4), flat washers (5), lock washers (6) and hex nuts (7) from PU mounting bracket (1) and glove box using 7/16” socket with ratchet and No. 2 cross tip screwdriver.

d. Remove PU mounting bracket (1).

R–6.8.2 REPLACE PU MOUNTING BRACKET

a. Align four PU mount bracket holes with glove box installation holes.

b. Install four machine bolts (4), flat washers (5), lock washers (6) and hex nuts (7) from PU mounting bracket (1) and glove box using 7/16” socket with ratchet and No. 2 cross tip screwdriver.

c. Replace PU isolation assembly IAW paragraph R–6.7.2.

d. Perform functional check IAW paragraph R–6.1.

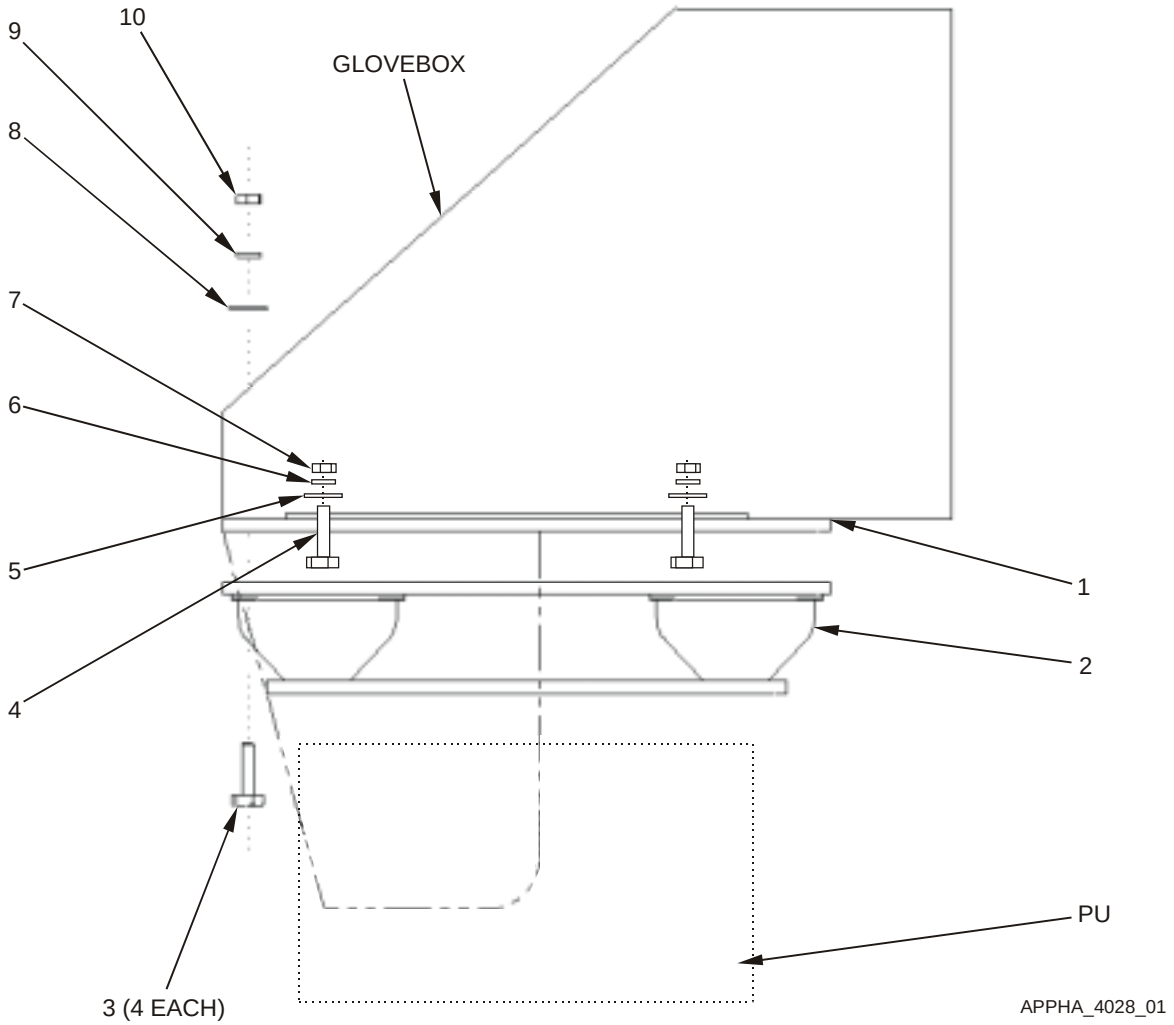

Figure R-6. Remove and Replace PU Isolation Assembly and PU Mount Bracket

Key and Parts List for Figure R-6

ITEM NO.	NOMENCLATURE	CAGE CODE	PART NUMBER	NSN	QTY	SMR
1	Bracket, PU Mounting	0J198	866031-1		1	PAOZZ
2	(PU isolation assembly) Isolator Assembly, PU	0J198	872826-1	5340-01-481-5742	1	PAODD
3	Screw, Cap, Hexagon	80204	B1821AH025C100N	5305-01-389-7984	4	PAOZZ
4	Bolt, Machine	96906	MS35190-291	5306-00-042-6921	4	PAOZZ
5	Washer, Flat	96906	MS27183-10	5310-00-809-4058	8	PAOZZ
6	Washer, Lock	96906	MS35338-44	5310-00-582-5965	8	PAOZZ
7	Nut, Plain, Hexagon	96906	MS35649-2252	5310-00-997-1888	8	PAOZZ
8	Washer, Flat	96906	MS27183-10	5310-00-809-4058	8	PAOZZ
9	Washer, Lock	96906	MS35338-44	5310-00-582-5965	8	PAOZZ
10	Nut, Plain, Hexagon	96906	MS35649-2252	5310-00-997-1888	8	PAOZZ
--	Guard, Fastener PU	0J198	881328-1		2	PAOZZ
--	Assembly, PU Lock	0J198	861865-1		1	XBOOO
--	Bracket, Locking	0J198	861871-1		1	XBOZZ
--	Screw	80205	MS35190-253	5305-00-059-4568	2	PAOZZ

R–6.9 REMOVE/REPLACE DU ISOLATION ASSEMBLY

Refer to Figure R-7.

NOTE

Ground straps are attached to components at one end (PU and DU) and a frame ground at the other end. Regardless of where the ground strap terminates, it is usually a burnished (void of paint) area. If the ground strap is removed from a burnished area, make sure to return it to the same burnished area. Where applicable, always connect the ground strap first when assembling, and disconnect the ground strap last when disassembling.

R–6.9.1 REMOVE DU ISOLATION ASSEMBLY

WARNING

Before conducting maintenance involving the removal and replacement of system components, ensure that all power to the FBCB2 system is off (including power from the vehicle). Failure to comply with warning may result in equipment damage or injury to personnel.

a. Power down AN/UYK-128(V) system IAW Operator's Manual TM 11-7010-326-10, or Pocket Guide TB 11-7010-326-10.

b. Remove DU IAW Unit Maintenance Manual TM 11-7010-326-20&P, Chapter 2.

NOTE

Note cable routing and tie-wrap locations before removing cable or tie-wraps.

c. Remove tie-wraps securing W2 display cable and ground strap to DU isolation assembly using diagonal wire cutters.

d. Remove two self-locking wing nuts (6), spacers (7), safety lanyards (5) and square neck bolts (9) from RAM-Ball display base with ball and DU isolation assembly (8) bottom plate.

CAUTION

Ensure support is provided to display while loosening RAM-Ball knob. Failure to comply could result in display falling from RAM-Ball mount causing equipment damage.

e. Loosen RAM-Ball knob while supporting DU isolation assembly (8) until RAM-Ball display base with ball can be lifted free of RAM-Ball socket arm.

f. Remove remaining two self-locking wing nuts (6), spacers (7) and square neck bolts (9) from RAM-Ball display base with ball and DU isolation assembly (8) bottom plate.

R–6.9.2 REPLACE DU ISOLATION ASSEMBLY

a. Align four holes in RAM-Ball display base with ball with slots in the DU isolation assembly bottom plate.

b. Install two square neck bolts (9), spacers (7) and self-locking wing nuts (6) on RAM-Ball display base with ball and DU isolation assembly (8) bottom plate.

CAUTION

Ensure RAM-Ball is free of dirt and contaminants before reassembling. Failure to comply can result in slippage or excess wear of RAM-Ball assembly.

c. Inspect and clean RAM-Ball socket arm and display base with ball, as necessary, using clean lint-free wipes.

d. Insert RAM-Ball display base with ball into RAM-Ball socket arm.

e. Adjust viewing angle and tighten RAM-Ball knob.

f. Install remaining two square neck bolts (9), safety lanyards (5), spacers (7) and self-locking wing nut (6) on RAM-Ball display base with ball and DU isolation assembly (8) bottom plate.

g. Secure W2 display cable and ground strap to DU isolation assembly (8) bottom plate using tie-wraps.

h. Dress tie-wraps using diagonal wire cutters.

i. Install DU IAW Unit Maintenance Manual TM 11-7010-326-20&P, Chapter 2.

j. Perform Functional Check IAW paragraph R–6.1.

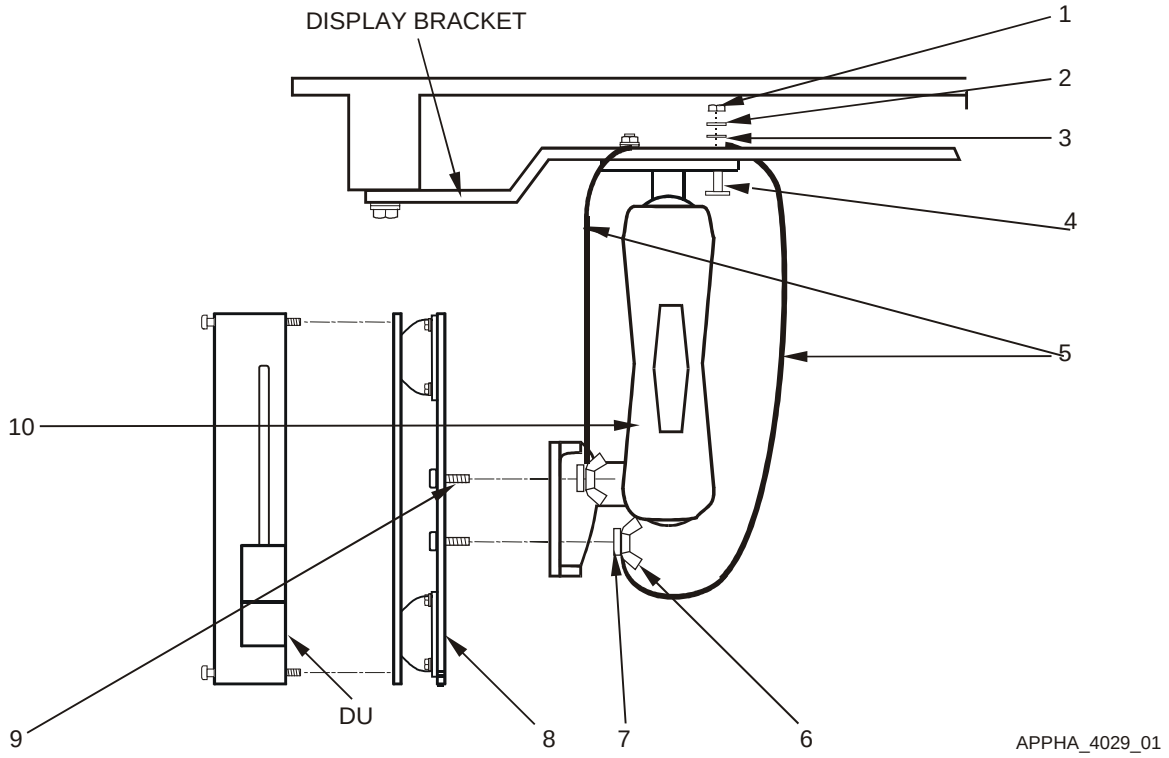

Figure R-7. Remove and Replace DU Isolation Assembly and RAM-Ball Assembly

Key and Parts List for Figure R-7

ITEM NO.	NOMENCLATURE	CAGE CODE	PART NUMBER	NSN	QTY	SMR
1	Nut, Plain, Hexagon	96906	MS35649-2252	5310-00-997-1888	3	PAOZZ
2	Washer, Lock	96906	MS35338-44	5310-00-582-5965	3	PAOZZ
3	Washer, Flat	96906	MS27183-10	5310-00-809-4058	3	PAOZZ
4	Bolt, Machine	96906	MS35190-291	5306-00-042-6921	3	PAOZZ
5	(Safety Lanyard) Wire Rope Assembly 2’	39428	30645T11		2	PAOZZ
6	Nut, Self-Locking, Wing	96906	MS51553-420	5310-01-384-2546	4	PAOZZ
7	Spacer, Aluminum	57177	10705AL315C		4	PAOZZ
8	(DU isolation assembly) Isolator Assembly, DU	0J198	872871-1	5340-01-481-5743	1	PAODD
9	Bolt, Square Neck	96906	MS35751-17	5306-00-889-2943	4	PAOZZ
10	Mounting Base, RAM-B	0J198	889489-1		1	PAOZZ
--	Strap, Tie Down, Elect	39428	7130K31		4	PAOZZ
--	Assembly, DU Lock	0J198	872843-1		1	XBOOO
--	Bracket, Locking	0J198	861871-3		1	XBOZZ
--	Washer, Lock	96906	MS35338-42	5310-00-045-3299	2	PAOZZ
--	Screw	80205	MS35190-253	5305-00-056-4568	2	PAOZZ

R–6.10 REMOVE/REPLACE RAM-BALL ASSEMBLY

Refer to Figure R-7.

NOTE

Ground straps are attached to components at one end (PU and DU) and a frame ground at the other end. Regardless of where the ground strap terminates, it is usually a burnished (void of paint) area. If the ground strap is removed from a burnished area, make sure to return it to the same burnished area. Where applicable, always connect the ground strap first when assembling, and disconnect the ground strap last when disassembling.

R–6.10.1 REMOVE RAM-BALL ASSEMBLY

WARNING

Before conducting maintenance involving the removal and replacement of system components, ensure that all power to the FBCB2 system is off (including power from the vehicle). Failure to comply with warning may result in equipment damage or injury to personnel.

a. Power down AN/UYK-128(V) system IAW Operator's Manual TM 11-7010-326-10, or Pocket Guide TB 11-7010-326-10.

b. Remove DU IAW Unit Maintenance Manual TM 11-7010-326-20&P, Chapter 2.

NOTE

Note cable routing and tie-wrap locations before removing cable or tie-wraps.

c. Remove tie-wraps securing W2 display cable and ground strap to DU isolation assembly using diagonal wire cutters.

d. Remove two self-locking wing nuts (6), safety lanyards (5), spacers (7) and square neck bolts (9) from RAM-Ball display base with ball and DU isolation assembly (8) bottom plate.

CAUTION

Ensure support is provided to display while loosening RAM-Ball knob. Failure to comply could result in display falling from RAM-Ball mount causing equipment damage.

e. Loosen RAM-Ball knob while supporting DU isolation assembly (8) until RAM-Ball display base with ball can be lifted free of RAM-Ball socket arm.

f. Remove remaining two self-locking wing nuts (6), spacers (7) and square neck bolts (9) from RAM-Ball display base with ball and DU isolation assembly (8) bottom plate.

g. Remove RAM-Ball display base with ball from DU isolation assembly.

h. Remove RAM-Ball socket arm from RAM-Ball mounting base with ball on display bracket.

R–6.10.1 REMOVE RAM-BALL ASSEMBLY (Continued)

i. Remove two machine bolts (4), safety lanyards (5), flat washers (3), lock washers (2) and hex nuts (1) from RAM-Ball mounting base with ball and display bracket using a 7/16” socket with ratchet and No. 3 cross-tip screwdriver.

j. Remove remaining machine bolt (4), flat washer (3), lock washer (2) and hex nut (1) from RAM-Ball mounting base with ball and display bracket using a 7/16” socket with ratchet and No. 3 cross-tip screwdriver.

k. Remove RAM-Ball mounting base with ball from display bracket.

R–6.10.2 REPLACE RAM-BALL ASSEMBLY

a. Align three holes in RAM-Ball mounting base with ball with display bracket installation holes.

b. Install two machine bolts (4), safety lanyards (5), flat washers (3), lock washers (2) and hex nuts (1) on RAM-Ball mounting base with ball and display bracket using a 7/16” socket with ratchet and No. 3 cross-tip screwdriver.

c. Install remaining machine bolt (4), flat washer (3), lock washer (2) and hex nut (1) on RAM-Ball mounting base with ball and display bracket using a 7/16” socket with ratchet and No. 3 cross-tip screwdriver.

CAUTION

Ensure RAM-Ball is free of dirt and contaminants before reassembling. Failure to comply can result in slippage or excess wear of RAM-Ball assembly.

d. Inspect and clean RAM-Ball socket arm, display and mounting base with ball, as necessary, using clean lint-free wipes.

e. Install RAM-Ball socket arm on RAM-Ball mounting base with ball on display bracket.

f. Align four RAM-Ball display base with ball installation holes with slots in DU isolation assembly (8) bottom plate.

g. Install two square neck bolts (9), spacers (7) and self-locking wing nuts (6) on RAM-Ball display base with ball and DU isolation assembly (8) bottom plate.

h. Insert RAM-Ball display base with ball into RAM-Ball socket arm while supporting DU isolation assembly.

i. Adjust viewing angle and tighten RAM-Ball knob.

j. Install remaining two square neck bolts (9), spacers (7), safety lanyards (5) and self-locking wing nuts (6) on RAM-Ball display base with ball and DU isolation assembly (8) bottom plate.

k. Install DU IAW Unit Maintenance Manual TM 11-7010-326-20&P, Chapter 2.

NOTE

Ensure W2 cable has enough slack to allow display to rotate 180°.

l. Secure W2 display cable and ground strap to DU isolation assembly using tie-wraps.

m. Dress tie-wraps using diagonal wire cutters.

n. Perform Functional Check IAW paragraph R–6.1.

R–6.11 REMOVE/REPLACE DISPLAY BRACKET ASSEMBLY

Refer to Figure R-8.

R–6.11.1 REMOVE DISPLAY BRACKET ASSEMBLY

a. Remove RAM-Ball assembly IAW paragraph R–6.10.1.

b. Remove four hex screws (2), lock washers (3) and flat washers (4) from display bracket (1) and ceiling support using 7/16” socket with ratchet.

c. Remove display bracket (1).

R–6.11.2 REPLACE DISPLAY BRACKET ASSEMBLY

a. Align four display bracket holes with ceiling support installation holes.

b. Install four hex screws (2), lock washers (3) and flat washers (4) on display bracket (1) and ceiling support using 7/16” socket with ratchet.

c. Install RAM-Ball assembly IAW paragraph 0.

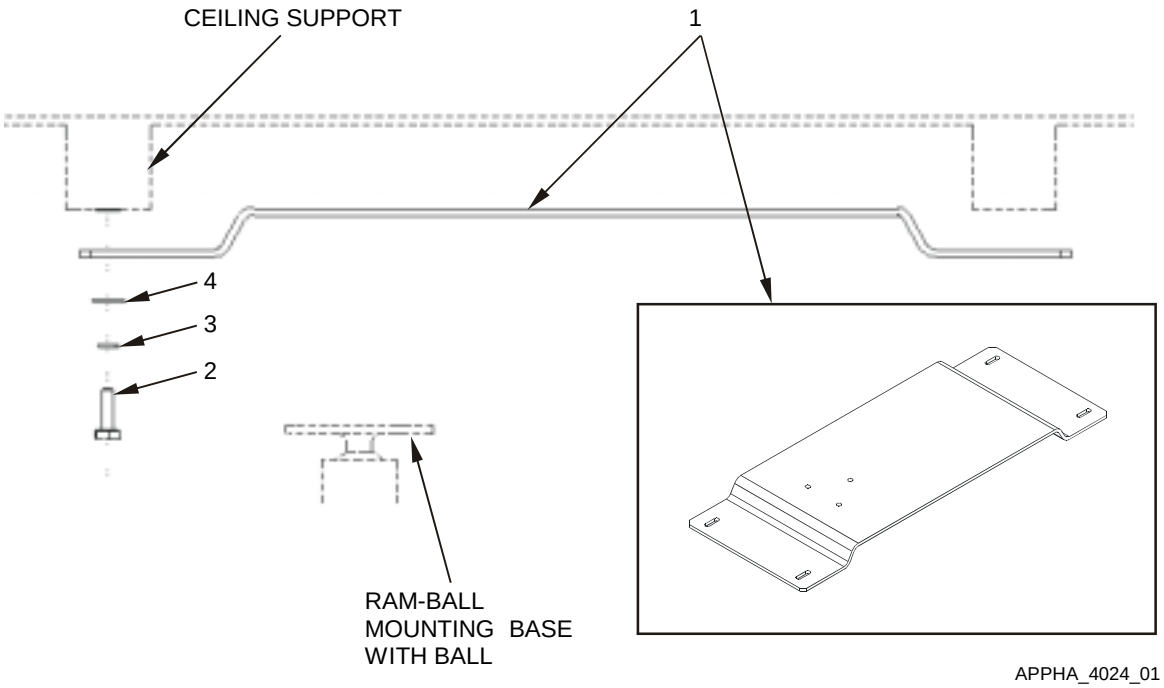

Figure R-8. Remove and Replace Display Bracket

Key and Parts List for Figure R-8

ITEM NO.	NOMENCLATURE	CAGE CODE	PART NUMBER	NSN	QTY	SMR
1	Bracket, Display	0J198	866032-1		1	XBOZZ
2	Screw, Cap, Hexagon	80204	B1821AH025C075N	5305-01-389-8000	4	PAOZZ
3	Washer, Lock	96906	MS35338-44	5310-00-582-5965	4	PAOZZ
4	Washer, Flat	96906	MS27183-10	5310-00-809-4058	4	PAOZZ

R–6.12 REMOVE/REPLACE KEYBOARD UNIT (KU) STOWAGE BOX

Refer to Figure R-9.

R–6.12.1 REMOVE KEYBOARD UNIT (KU) STOWAGE BOX

a. Remove keyboard from stowage box, if stowed.

b. Loosen four KU stowage box captive screws (2) until the captive screws move freely using a No. 2 cross-tip screwdriver.

c. Remove keyboard stowage box (1) from vehicle dash mounting plate.

R–6.12.2 REPLACE KEYBOARD UNIT (KU) STOWAGE BOX

a. Align four KU stowage box captive screws with vehicle dash mounting plate installation holes.

b. Tighten four captive screws (2) using a No. 2 cross-tip screwdriver.

c. Stow keyboard, if necessary.

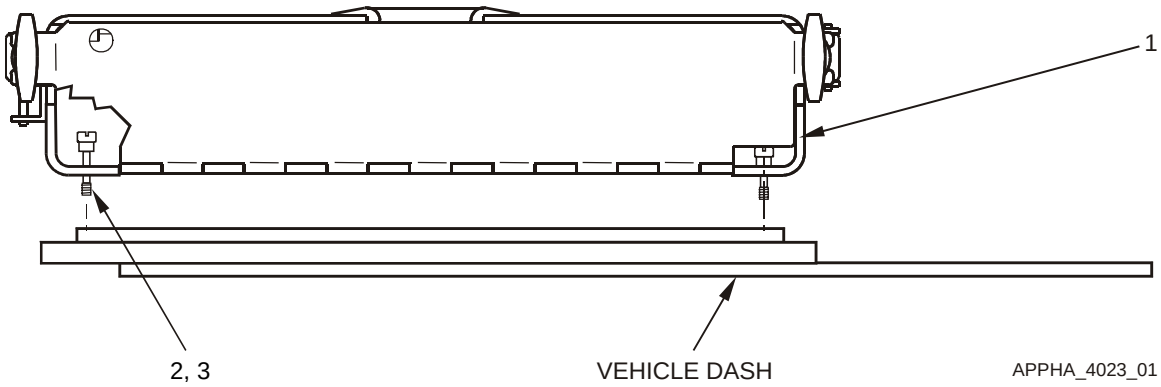

Figure R-9. Remove and Replace Keyboard Stowage Box Mounted On Vehicle

Key and Parts List for Figure R-9

ITEM NO.	NOMENCLATURE	CAGE CODE	PART NUMBER	NSN	QTY	SMR
1	Box, KU Stowage	0J198	872845-1	2540-01-481-5744	1	PAODD
2	Screw, Captive Panel	57177	PH207-05SS1032		4	PAOZZ
3	Retainer, Panel Screw	57177	214-03SS10-32		4	PAOZZ
--	Strip, Rubber	0J198	872845-17		1	XBOOO
--	Rubber Edge Trim	39428	8507K16	5325-01-435-2840	9	PAOZZ
--	Adhesive	04963	Scotch-Grip Rubber	8040-00-664-4318	1	PAOZZ
--	Label, Keyboard Box	OJ198	881323-1		1	PAOZZ
--	Case, Keyboard	0J198	872845-11		1	XBOOO
--	Bottom, Stowage Box	0J198	872845-12		1	XBOOO
--	Side Rail, Keybrd Box	0J198	872845-13		1	XBOOO
--	Side Rail, Keybrd Box	0J198	872845-14		1	XBOOO
--	Door, Keyboard Box	0J198	872845-15		1	XBOOO
--	Hinge, Keyboard Box	0J198	872845-16		1	XBOOO
--	Rivet, Solid, Csk	96906	MS20426AD-4-5	5320-00-117-6950	6	PAOZZ
--	Nut, Plain	96906	MS35649-262	5310-00-934-9747	3	PAOZZ
--	Grip, Handle Assy	0J198	861867-1		1	XBOOO
--	Grip, Handle	0J198	861869-1		1	XBOZZ
--	Screw, Machine	96906	MS35206-228	5305-00-984-4988	4	PAOZZ
--	Washer, Lock	96906	MS35338-41	5310-00-045-4007	4	PAOZZ
--	Tape, Shielding, Elect	39428	7648A34		1	XBOZZ
--	Bracket, KU Mounting	0J198	866033-1		1	PAOZZ

R–6.13 REMOVE/REPLACE KEYBOARD UNIT (KU) STOWAGE BOX DOOR LATCHES

Refer to Figure R-10.

R–6.13.1 REMOVE KEYBOARD UNIT (KU) STOWAGE BOX DOOR LATCHES

a. Pull rubber T-handles and unfasten KU stowage box door latches, if necessary.

b. Remove two pan head screws (1), lock washers (2) and flat washers (3) from each KU stowage box door latch (4) using No. 2 cross-tip screwdriver.

c. Remove KU stowage box door latch (4).

R–6.13.2 REPLACE KEYBOARD UNIT (KU) STOWAGE BOX DOOR LATCHES

NOTE

The same KU stowage box door latch part is used for each side of the keyboard stowage box. There is a bumper on one side of the latch that should be positioned toward the side of the keyboard stowage box when fastened.

a. Align KU stowage box door latch mounting holes with mounting holes in KU stowage box.

b. Install and tighten two pan head screws (1), lock washers (2) and flat washers (3) for each KU stowage box door latch (4), using a No. 2 cross-tip screwdriver.

c. Pull rubber T-handles and fasten KU stowage box door latches.

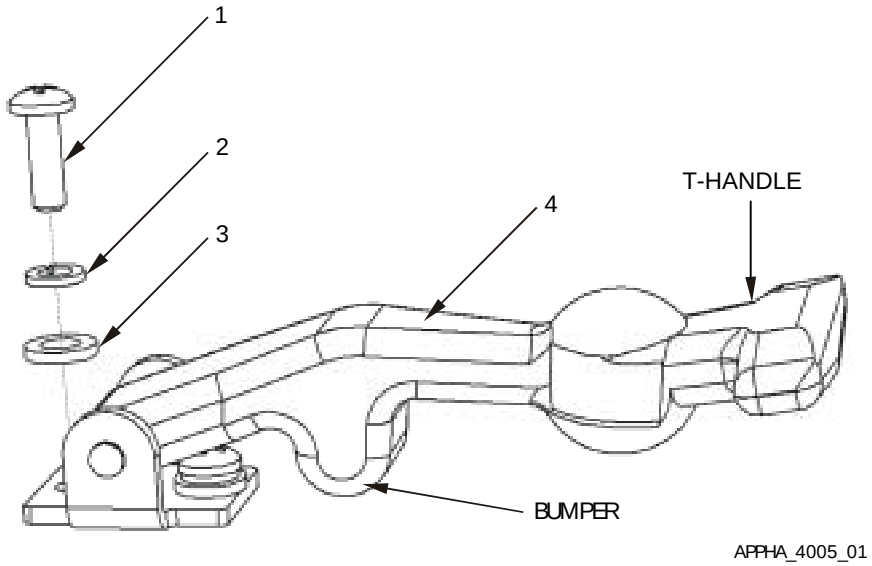

Figure R-10. Remove and Replace Keyboard Unit (KU) Stowage Box Door Latches

Key and Parts List for Figure R-10

ITEM NO.	NOMENCLATURE	CAGE CODE	PART NUMBER	NSN	QTY	SMR
1	Screw, Pan Head	96906	MS35206-229	5305-00-984-4989	4	PAOZZ
2	Washer, Lock	96906	MS35338-41	5310-00-045-4007	4	PAOZZ
3	Washer, Flat, Rd	96906	MS27183-5	5310-00-983-8483	4	PAOZZ
4	(KU stowage box door latch) Latch, Thumb	94222	37-20-071-20	5340-01-351-3340	2	PAOZZ

This page intentionally left blank.

APPENDIX S

SUPPLEMENTARY INFORMATION FOR

M923 5-TON / M936A2 WRECKER

TABLE OF CONTENTS

Page

S–1 GENERAL S–3

S–2 COMPONENT ITEM NUMBERS AND PART NUMBERS S–3

S–3 SYSTEM INTERFACES S–3

S–3.1 MECHANICAL S–3

S–3.2 CABLE INTERFACES S–4

S–4 COMPONENT LOCATION S–6

S–4.1 GENERAL LOCATION S–6

S–4.2 MOUNTING S–6

S–5 PLATFORM-UNIQUE TROUBLESHOOTING S–8

S–6 REMOVAL/REPLACEMENT IN THE PLATFORM S–8

S–6.1 FUNCTIONAL CHECK S–8

S–6.2 REMOVE/REPLACE W1 POWER CABLE S–9

S–6.3 REMOVE/REPLACE W2 DISPLAY CABLE S–10

S–6.4 REMOVE/REPLACE W3 SERIAL INTERFACE ADAPTER DEVICE (SIAD) S–11

S–6.5 REMOVE/REPLACE W3P PLGR CABLE S–12

S–6.6 REMOVE/REPLACE W3N INC CABLE S–13

S–6.7 REMOVE/REPLACE PU ISOLATION ASSEMBLY S–15

S–6.8 REMOVE/REPLACE DU ISOLATION ASSEMBLY S–18

S–6.9 REMOVE/REPLACE RAM-BALL ASSEMBLY S–22

S–6.10 REMOVE/REPLACE KEYBOARD UNIT (KU) STOWAGE BOX S–24

S–6.11 REMOVE/REPLACE KEYBOARD UNIT (KU) STOWAGE BOX DOOR LATCHES S–26

LIST OF ILLUSTRATIONS

Page
Figure S-1. Equipment Interface Block Diagram S–5
Figure S-2. Relative Component Locations S–6
Figure S-3. Display Unit and PLGR Dashboard Mounting S–7
Figure S-4. Cable Run S–14
Figure S-5. Remove and Replace PU Isolation Assembly S–17
Figure S-6. Remove and Replace DU Isolation Assembly and RAM-Ball Assembly S–20
Figure S-7. Remove and Replace Keyboard Unit (KU) Stowage Box S–25
Figure S-8. Remove and Replace Keyboard Unit (KU) Stowage Box Door Latch S–27

S–1 GENERAL

This appendix describes the interfaces between the FBCB2 equipment and the M923 Drop Side Cargo Truck and the M936 A2 Wrecker. The 5-Ton Truck consists of several different platform variations. Note that some M927 versions of this vehicle, which are equipped with a locally manufactured shelter, utilize the FBCB2 installation kit normally provided for the M934 Expando Van. This appendix also identifies the component parts of the 5-Ton Truck platform installation kit and details the removal and replacement procedures particular to the M923 and M936 A2 vehicles.

S–2 COMPONENT ITEM NUMBERS AND PART NUMBERS

Key and Parts List tables contained in the Removal and Replacement section of this Appendix serve a dual purpose. Use the Item Numbers in the Key to identify components and attaching hardware shown in the Figures illustrating the tasks. The nomenclature and part number for the hardware and equipment mounting components of the installation kit also are keyed to the Item Numbers in the tables. Additional parts ordering information, such as Contractor and Government Entity code (CAGE); National Stock Number (NSN); quantity; and Source, Maintenance and Recoverability (SMR) codes, are provided. The Key and Parts List follow the task illustrations.

S–3 SYSTEM INTERFACES

S–3.1 MECHANICAL

The mechanical hardware-to-hardware interfaces include:

a. Cables

b. Processor Unit (PU)

c. Display Unit (DU)

d. Keyboard Unit (KU)

S–3.2 CABLE INTERFACES

Figure S-1 illustrates a block diagram of the interfaces between the FBCB2 equipment and the M923 / M936 A2 5-Ton Truck (Platform). Figure S-1 also illustrates the signal and control interfaces along with the terminal connector labels (e.g., P1, P2). The purpose of each cable is listed below:

Cable Name	Purpose
W1–Cable	Supplies vehicle power (28 VDC) to the AN/UYK-128(V) computer and its subassemblies.
W2–Cable	Supplies power and signals to the Display Unit (DU) and Keyboard Unit (KU). Returns Man Machine Interface (MMI) information from the KU to the Processor Unit (PU).
W3–Cable	The Serial Interface Adapter Device (SIAD) is a conduit assembly that breaks out each of the serial interface ports to a connector.
W3P–Cable	Collects position and time information from the PLGR.
W3N–Cable	Provides duplex communication between the PU, Internet Controller (INC) and radios.
W4–Cable	Audio cable (This cable is not used in this platform).
W5–Cable	The Expansion Interface Adapter Device (EIAD) is connected to the Universal Serial Bus (USB) connector only when this vehicle is to be used in a Tactical Operations Center (TOC) setup. When used in this configuration, it is connected between the PU J5 connector and local router.
Ground Strap	Provides safety ground for the PU.
Ground Strap	Provides safety ground for the DU.

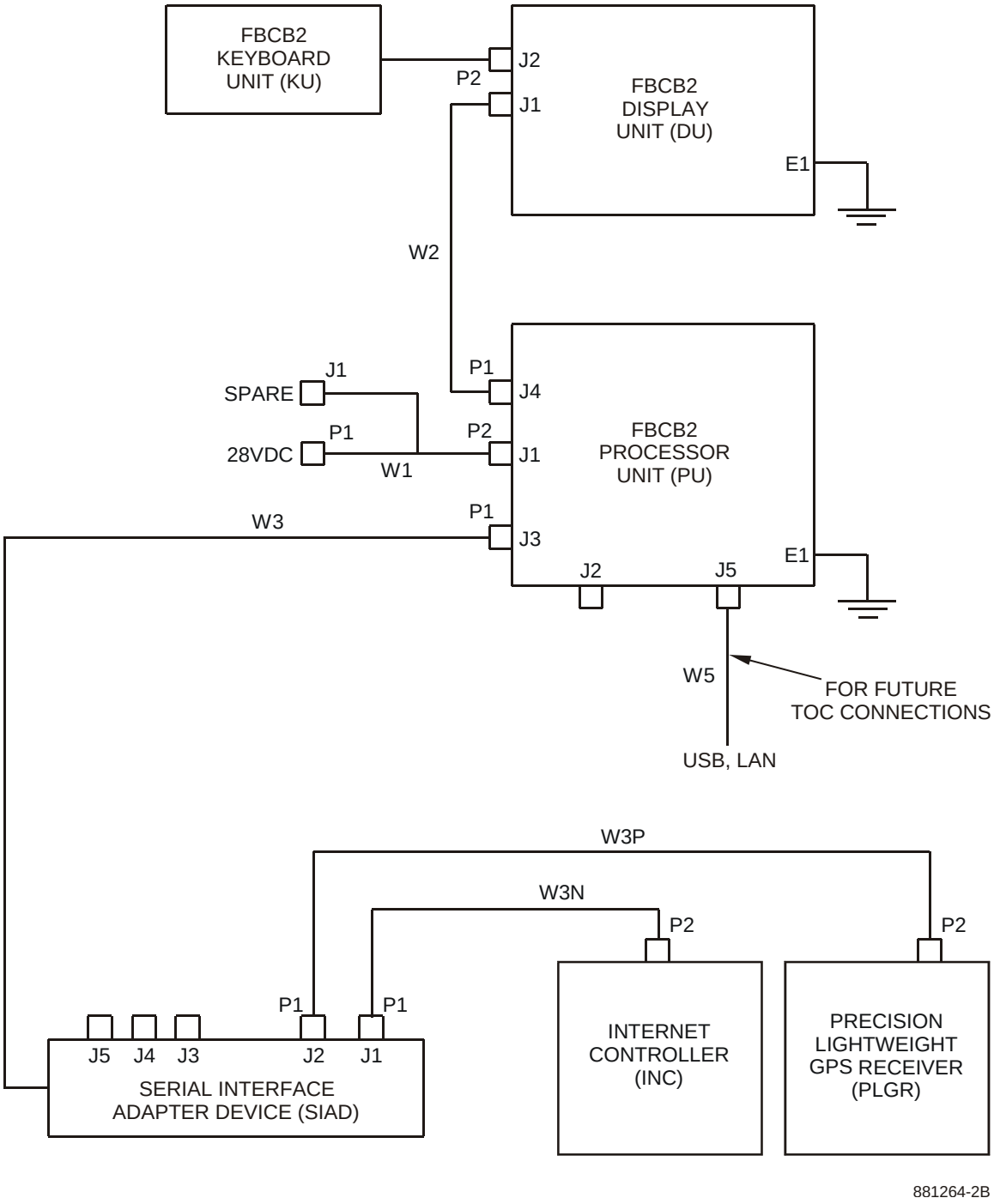

Figure S-1. Equipment Interface Block Diagram

S–4 COMPONENT LOCATION

S–4.1 GENERAL LOCATION

Figure S-2 shows the relative locations of the FBCB2 computer equipment and mounting components in the cab of the 5-Ton Truck.

S–4.2 MOUNTING

The display unit (DU) is mounted on the passenger side of the dashboard. The processor unit (PU) is mounted upright on the floorboard in front of the seat between the driver and passenger. The SINCGARS is mounted on the bench between the driver and passenger.

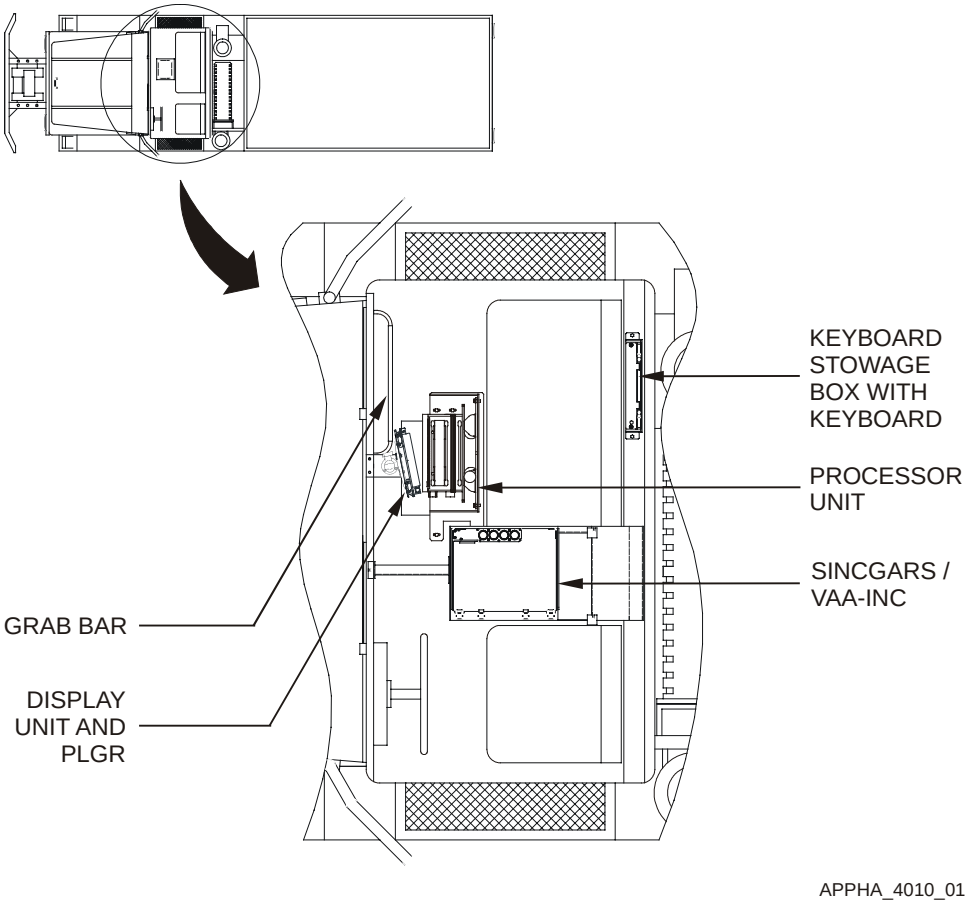

Figure S-2. Relative Component Locations

S–4.2.1 DISPLAY UNIT AND PLGR MOUNTING

Figure S-3 shows the Display Unit and PLGR dashboard mounting view.

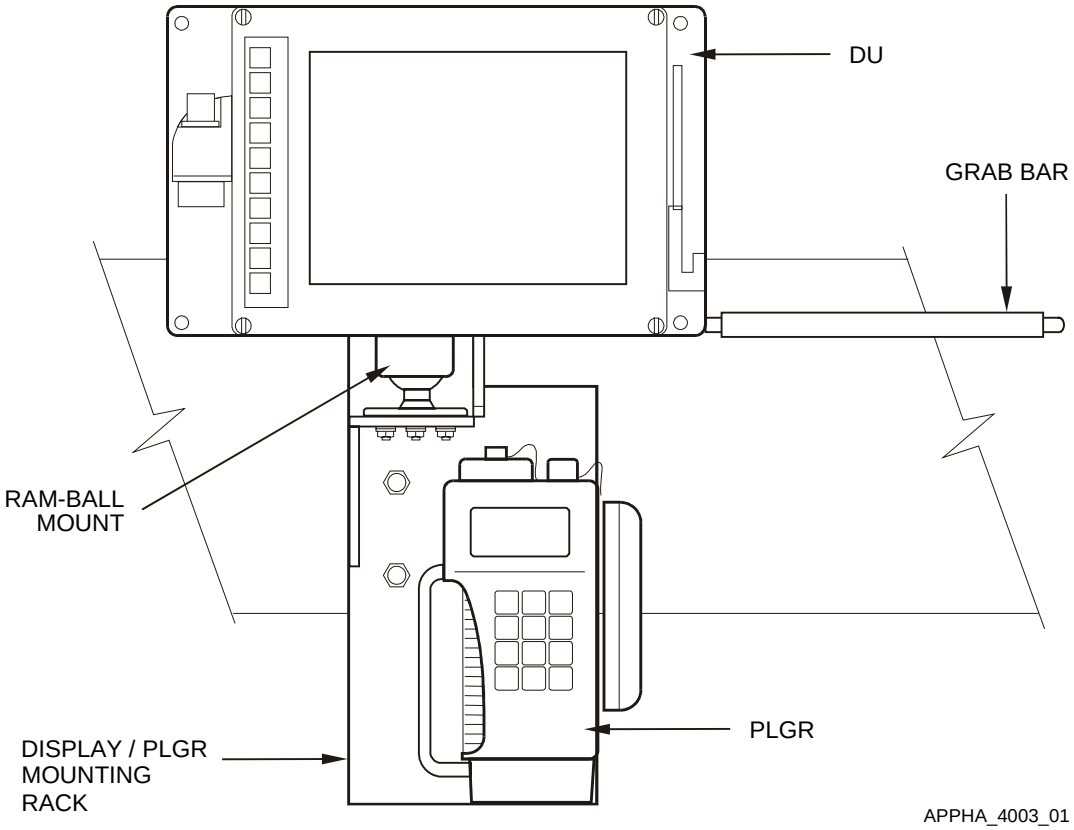

Figure S-3. Display Unit and PLGR Dashboard Mounting

S–5 PLATFORM-UNIQUE TROUBLESHOOTING

On the left side of the SINCGARS in M923 vehicles equipped with a multi-net rack is a power junction box. The power junction box has three circuit breakers, which face the rear of the rack. These circuit breakers are CB1 to the right, CB2 center and CB3 to the left. CB2 controls 28 VDC power to the AN/UYK-128(V) computer. CB3 controls power to the SINCGARS. Be aware of these controls during system power-up, power-down and troubleshooting. Note that the M936 A2 Wrecker is not equipped with the multi-net rack and circuit breakers as described above.

S–6 REMOVAL/REPLACEMENT IN THE PLATFORM

Most installations must be tailored to the platform. Cables and brackets are unique to the installation. Before a part or assembly is removed from a vehicle, fill out a “Maintenance Request” DA Form 2407. One copy of this completed form must remain with the vehicle and the remaining copies must be kept with the failed component. To prove the operability of the system after an item is replaced, perform the system Functional Check.

S–6.1 FUNCTIONAL CHECK

S–6.1.1 POWER UP

Power up and initialize all interface equipment and the AN/UYK-128(V) In Accordance With (IAW) the Operator’s Manual TM 11-7010-326-10, or Pocket Guide TB 11-7010-326-10.

S–6.1.2 VERIFICATION

NOTE

Observe that the Display Unit PWR, DISP and CPU green LED lights are lit.

a. Observe that the PLGR synchronizes with PU, indicated by the PLGR dialog box showing green.

b. Observe that the Router synchronizes with the PU, indicated by the Router dialog box showing green.

c. At the Session Manager screen, select OPS button to display the OPS screen.

d. Verify the GPS status is either green or amber on the Classification/Status Bar.

e. Verify the Communications status is either green or amber on the Classification/Status Bar.

S–6.1.3 POWER DOWN

Power down all interface equipment and the AN/UYK-128(V) IAW the Operator’s Manual TM 11-7010-326-10, or Pocket Guide TB 11-7010-326-10.

S–6.2 REMOVE/REPLACE W1 POWER CABLE

Refer to Figure S-4.

S–6.2.1 REMOVE W1 POWER CABLE

WARNING

Before conducting maintenance involving the removal and replacement of system components, ensure that all power to the FBCB2 system is off (including power from the vehicle). Failure to comply with warning may result in equipment damage or injury to personnel.

a. Power down AN/UYK-128(V) system IAW Operator's Manual TM 11-7010-326-10, or Pocket Guide TB 11-7010-326-10.

b. Power down SINCGARS IAW TM 11-5820-890-10-8.

c. Unlatch and slide the Vehicle Amplifier-Adapter (VAA) forward from SINCGARS Mounting Base (MB) to allow access to W1 cable connector IAW TM 11-5820-890-10-8.

d. Set CB2 switch to OFF, if vehicle (M923) is equipped with multi-net rack.

e. Disconnect W1-P1 cable connector from 28 VDC power junction box J3 connector, if vehicle (M923) is equipped with the multi-net rack.

f. Disconnect W1-P1 cable connector from the SINCGARS Mounting Base (MB) (MT-6352A/VRC) A4-J2 connector.

g. Disconnect W1-P2 cable connector from PU J1 connector.

h. Install protective cap on PU J1 connector.

NOTE

Note cable routing and tie-wrap locations before removing cable or tie-wraps.

i. Remove tie-wraps securing W1 cable using diagonal wire cutters.

j. Remove W1 power cable (2).

S–6.2.2 REPLACE W1 POWER CABLE

a. Route W1 power cable (2).

b. Remove protective cap from PU J1 connector.

c. Connect W1-P2 cable connector to PU J1 connector.

d. Connect W1-P1 cable connector to SINCGARS Mounting Base (MB) (MT-6352A/VRC) A4-J2 connector.

e. Connect W1-P1 cable connector to 28 VDC power junction box J3 connector, if vehicle (M923) is equipped with the multi-net rack.

f. Secure W1 cable using tie-wraps, as applicable.

g. Dress tie-wraps using diagonal wire cutters.

h. Set CB2 switch to ON, if vehicle (M923) is equipped with multi-net rack.

i. Perform Functional Check IAW paragraph S–6.1.

S–6.3 REMOVE/REPLACE W2 DISPLAY CABLE

Refer to Figure S-4.

S–6.3.1 REMOVE W2 DISPLAY CABLE

WARNING

Before conducting maintenance involving the removal and replacement of system components, ensure that all power to the FBCB2 system is off (including power from the vehicle). Failure to comply with warning may result in equipment damage or injury to personnel.

a. Power down AN/UYK-128(V) system IAW Operator's Manual TM 11-7010-326-10, or Pocket Guide TB 11-7010-326-10.

b. Disconnect W2-P1 cable connector from PU J4 connector.

c. Install protective cap on PU J4 connector.

d. Disconnect W2-P2 cable connector from display J1 connector.

e. Install protective cap on display J1 connector.

NOTE

Note cable routing and tie-wrap locations before removing cable or tie-wraps.

f. Remove tie-wraps from W2 cable using diagonal wire cutters.

g. Remove W2 display cable (5).

S–6.3.2 REPLACE W2 DISPLAY CABLE

a. Route W2 display cable (5).

b. Remove protective cap from display J1 connector.

c. Connect W2-P2 cable connector to display J1 connector.

d. Remove protective cap from PU J4 connector.

e. Connect W2-P1 cable connector to PU J4 connector.

f. Secure W2 cable using tie-wraps.

g. Dress tie-wraps using diagonal wire cutters.

h. Perform Functional Check IAW paragraph S–6.1.

S–6.4 REMOVE/REPLACE W3 SERIAL INTERFACE ADAPTER DEVICE (SIAD)

Refer to Figure S-4.

S–6.4.1 REMOVE W3 SERIAL INTERFACE ADAPTER DEVICE (SIAD)

WARNING

Before conducting maintenance involving the removal and replacement of system components, ensure that all power to the FBCB2 system is off (including power from the vehicle). Failure to comply with warning may result in equipment damage or injury to personnel.

a. Power down AN/UYK-128(V) system IAW Operator's Manual TM 11-7010-326-10, or Pocket Guide TB 11-7010-326-10.

b. Disconnect W3N-P1 cable connector from W3 SIAD J1 connector.

c. Disconnect W3P-P1 cable connector from W3 SIAD J2 connector.

d. Disconnect W3 SIAD-P1 cable connector from PU J3 connector.

e. Install protective cap on PU J3 connector.

NOTE

Note cable routing and tie-wrap locations before removing cable or tie-wraps.

f. Remove tie-wraps securing W3 SIAD using diagonal wire cutters.

g. Remove W3 SIAD (4).

S–6.4.2 REPLACE W3 SERIAL INTERFACE ADAPTER DEVICE (SIAD)

a. Route W3 SIAD (4) into original position, adjacent to PU mounting bracket.

b. Remove protective cap from PU J3 connector.

c. Connect W3 SIAD-P1 cable connector to PU J3 connector.

d. Connect W3P-P1 cable connector to W3 SIAD J2 connector.

e. Connect W3N-P1 cable connector to W3 SIAD J1 connector.

f. Secure W3 SIAD using tie-wraps.

g. Dress tie-wraps using diagonal wire cutters.

h. Perform Functional Check IAW paragraph S–6.1.

S–6.5 REMOVE/REPLACE W3P PLGR CABLE

Refer to Figure S-4.

S–6.5.1 REMOVE W3P PLGR CABLE

WARNING

Before conducting maintenance involving the removal and replacement of system components, ensure that all power to the FBCB2 system is off (including power from the vehicle). Failure to comply with warning may result in equipment damage or injury to personnel.

a. Power down AN/UYK-128(V) system IAW Operator's Manual TM 11-7010-326-10, or Pocket Guide TB 11-7010-326-10.

b. Disconnect W3P-P1 cable connector from W3 SIAD J2 connector.

c. Remove PLGR from mounting rack.

d. Disconnect W3P-P2 cable connector from PLGR J2 connector using offset flat screwdriver.

NOTE

Note cable routing and tie-wrap locations before removing cable or tie-wraps.

e. Remove tie-wraps securing W3P cable using diagonal wire cutters.

f. Remove W3P cable (1).

S–6.5.2 REPLACE W3P PLGR CABLE

a. Route W3P cable (1).

b. Connect W3P-P2 cable connector to PLGR J2 connector using offset flat screwdriver.

c. Install PLGR into mounting rack.

d. Connect W3P-P1 cable connector to W3 SIAD J2 connector.

e. Secure W3P cable using tie-wraps.

f. Dress tie-wraps using diagonal wire cutters.

g. Perform Functional Check IAW paragraph S–6.1.

S–6.6 REMOVE/REPLACE W3N INC CABLE

Refer to Figure S-4.

S–6.6.1 REMOVE W3N INC CABLE

WARNING

Before conducting maintenance involving the removal and replacement of system components, ensure that all power to the FBCB2 system is off (including power from the vehicle). Failure to comply with warning may result in equipment damage or injury to personnel.

a. Power down AN/UYK-128(V) system IAW Operator's Manual TM 11-7010-326-10, or Pocket Guide TB 11-7010-326-10.

b. Disconnect W3N-P1 cable connector from W3 SIAD J1 connector.

c. Disconnect W3N-P2 cable connector from SINCGARS INC J6 connector.

NOTE

Note cable routing and tie-wrap locations before removing cable or tie-wraps.

d. Remove tie-wraps securing W3N cable using diagonal cutters.

e. Remove W3N cable (3).

S–6.6.2 REPLACE W3N INC CABLE

a. Route W3N cable (3).

b. Connect W3N-P2 cable connector to SINCGARS INC J6 connector.

c. Connect W3N-P1 cable connector to W3 SIAD J1 connector.

d. Secure W3N cable using tie-wraps.

e. Dress tie-wraps using diagonal wire cutters.

f. Perform Functional Check IAW paragraph S–6.1.

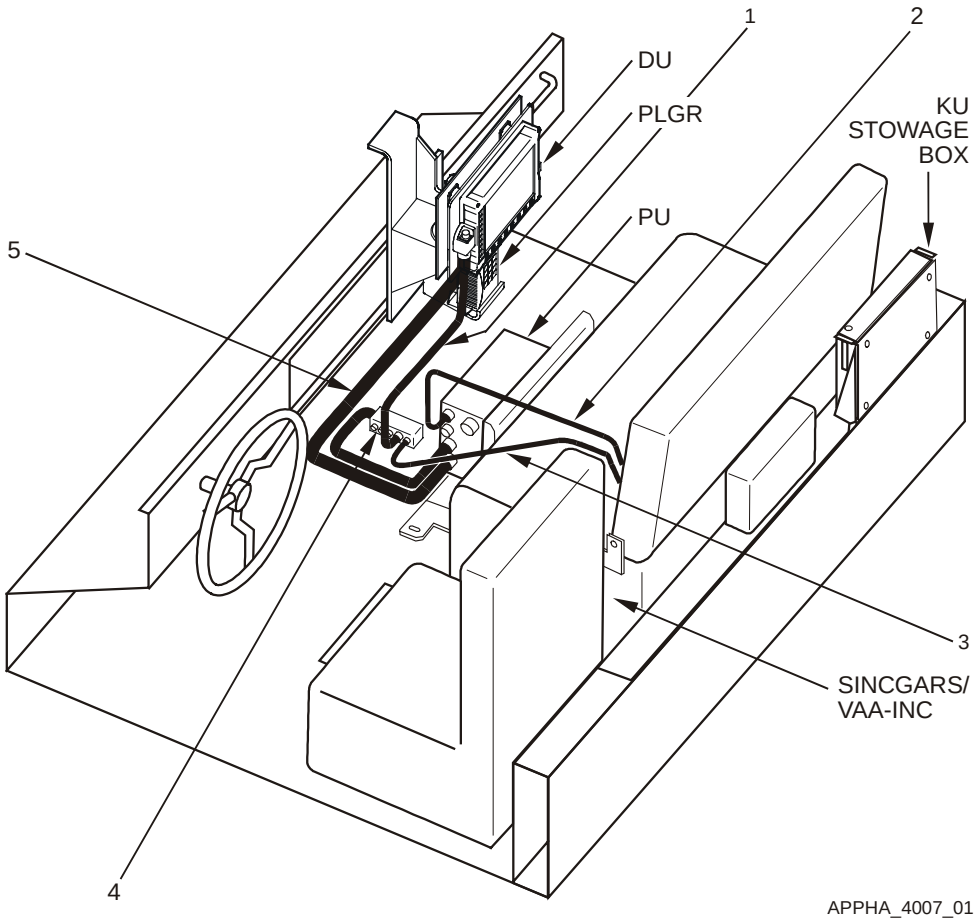

Figure S-4. Cable Run

Key and Parts List for Figure S-4

ITEM NO.	NOMENCLATURE	CAGE CODE	PART NUMBER	NSN	QTY	SMR
1	Cable Assembly W3P	0J198	881335-2	5995-01-478-4893	1	PAODD
2	Cable Assembly W1	0J198	866004-1	5995-01-478-4914	1	PAODD
3	Cable Assembly W3N	0J198	881336-2	5995-01-478-4922	1	PAODD
4	Adapter Assy SIAD W3	0J198	881331-1	4920-01-478-3722	1	PAODD
5	Cable Assembly W2	0J198	881327-1	5995-01-478-4876	1	PAODD
--	Strap, Tie Down, Elect	39428	7130K31		A/R	PAOZZ
--	Holder, Cable, Tie 2w	39428	7566K27		A/R	PAOZZ

S–6.7 REMOVE/REPLACE PU ISOLATION ASSEMBLY

Refer to Figure S-5.

NOTE

Ground straps are attached to components at one end (PU and DU) and a frame ground at the other end. Regardless of where the ground strap terminates, it is usually a burnished (void of paint) area. If the ground strap is removed from a burnished area, make sure to return it to the same burnished area. Where applicable, always connect the ground strap first when assembling, and disconnect the ground strap last when disassembling.

S–6.7.1 REMOVE PU ISOLATION ASSEMBLY

WARNING

Before conducting maintenance involving the removal and replacement of system components, ensure that all power to the FBCB2 system is off (including power from the vehicle). Failure to comply with warning may result in equipment damage or injury to personnel.

a. Power down AN/UYK-128(V) system IAW Operator's Manual TM 11-7010-326-10, or Pocket Guide TB 11-7010-326-10.

NOTE

Do not remove the Removable Hard Disk Drive Cartridge (RHDDC), locking bracket, or thermal guard (if installed) from PU.

b. Remove PU IAW Unit Maintenance Manual TM 11-7010-326-20&P, Chapter 2.

c. Remove one hex head screw (12), lock washer (10), flat washer (9) and ground strap from PU isolation assembly bottom plate using a 7/16" socket with ratchet and 3" extension.

d. Remove remaining three hex head screws (12), lock washer (10) and flat washer (9) from PU isolation assembly (11) bottom plate using a 7/16" socket with ratchet and 3" extension.

e. Remove PU isolation assembly (11) from PU mounting bracket (7).

S–6.7.2 REPLACE PU ISOLATION ASSEMBLY

a. Align four PU isolation assembly (11) bottom plate holes with installation holes in PU mounting bracket (7).

NOTE

To ensure positive ground, PU ground strap must make direct contact with bare metal. Ensure PU ground strap is installed in its original location at the PU isolation assembly bottom plate mounting hole. Slip the lock washer, flat washer and then the ground strap on the mounting screw before installing and tightening screw.

b. Install one hex head screw (12), lock washer (10), flat washer (9) and ground strap on PU isolation assembly (11) bottom plate and PU mounting bracket (7) using a 7/16” socket with ratchet and 3” extension.

c. Install remaining three hex head screws (12), lock washers (10) and flat washers (9) on PU isolation assembly (11) bottom plate and PU mounting bracket (7) using a 7/16” socket with ratchet and 3” extension.

d. Replace PU IAW Unit Maintenance Manual TM 11-7010-326-20&P, Chapter 2.

e. Perform Functional Check IAW paragraph S–6.1.

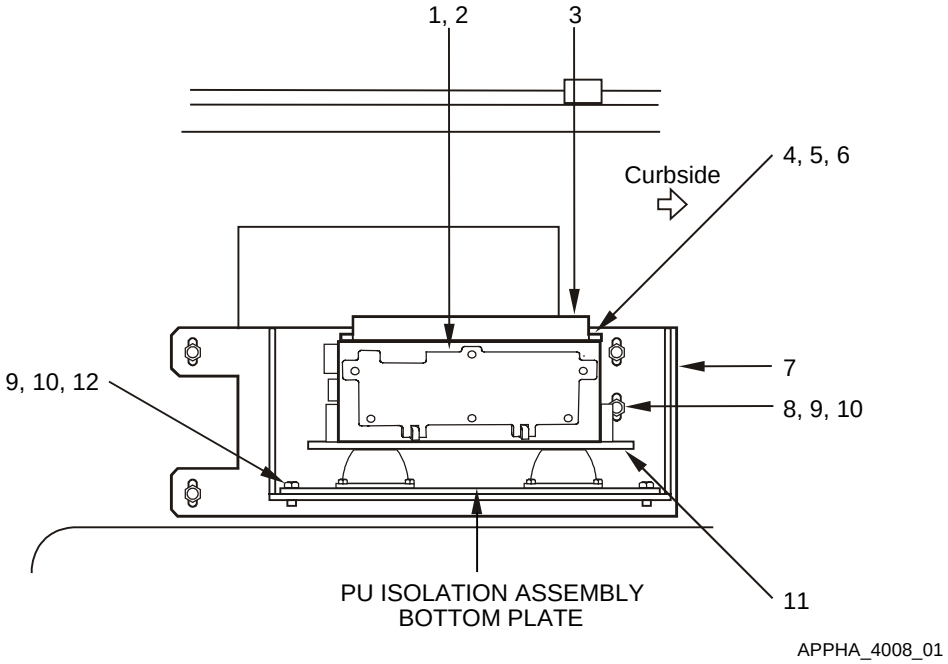

Figure S-5. Remove and Replace PU Isolation Assembly

Key and Parts List for Figure S-5.

ITEM NO.	NOMENCLATURE	CAGE CODE	PART NUMBER	NSN	QTY	SMR
--	Assembly, PU Lock	0J198	861865-1		1	XBOOO
1	Bracket, Locking	0J198	861871-1		1	XBOZZ
2	Screw	80205	MS35190-253	5305-00-059-4568	2	PAOZZ
--	Thermal Guard Assembly (if installed)	0J198	872860-1		1	XBOOO
3	Thermal Guard	0J198	872860-11		1	PAOZZ
4	Screw, Machine	96906	MS51958-63	5305-00-059-3659	4	PAOZZ
5	Grommet	63590	BG2903	5325-01-291-3383	4	PAOZZ
6	Retainer, Bolt	032U6	75-4119		4	PAOZZ
7	(PU mounting bracket) Bracket, PU Mount	0J198	866036-1		1	XBOZZ
8	Screw, Cap, Hexagon	80204	B1821AH025C125N	5305-00-068-0509	4	PAOZZ
9	Washer, Flat	96906	MS27183-10	5310-00-809-4058	8	PAOZZ
10	Washer, Lock	96906	MS35338-44	5310-00-582-5965	8	PAOZZ
11	(PU isolation assembly) Plate, Resilient Mount PU	0J198	872826-1	5340-01-481-5742	1	PAODD
12	Screw, Cap, Hexagon	80204	B1821AH025C100N	5305-01-389-7984	4	PAOZZ

S–6.8 REMOVE/REPLACE DU ISOLATION ASSEMBLY

Refer to Figure S-6.

NOTE

Ground straps are attached to components at one end (PU and DU) and a frame ground at the other end. Regardless of where the ground strap terminates, it is usually a burnished (void of paint) area. If the ground strap is removed from a burnished area, make sure to return it to the same burnished area. Where applicable, always connect the ground strap first when assembling, and disconnect the ground strap last when disassembling.

S–6.8.1 REMOVE DU ISOLATION ASSEMBLY

WARNING

Before conducting maintenance involving the removal and replacement of system components, ensure that all power to the FBCB2 system is off (including power from the vehicle). Failure to comply with warning may result in equipment damage or injury to personnel.

a. Power down AN/UYK-128(V) system IAW Operator's Manual TM 11-7010-326-10, or Pocket Guide TB 11-7010-326-10.

b. Remove DU IAW Unit Maintenance Manual TM 11-7010-326-20&P, Chapter 2.

NOTE

Note cable routing and tie-wrap locations before removing cable or tie-wraps.

c. Remove tie-wraps securing W2 display cable and ground strap to DU isolation assembly using diagonal wire cutters.

d. Loosen RAM-Ball knob while supporting DU isolation assembly (1) until RAM-Ball display base with ball can be lifted free of RAM-Ball socket arm.

e. Remove four self-locking wing nuts (22), lock washers (8), flat washers (9) and square neck bolts (21) from DU RAM-Ball adapter plate (2) and DU isolation assembly (1) bottom plate.

f. Remove the DU RAM-Ball adapter plate (2) and attached RAM-Ball display base with ball from the DU isolation assembly (1) bottom plate.

S–6.8.2 REPLACE DU ISOLATION ASSEMBLY

a. Align four holes in DU RAM-Ball adapter plate (2) and attached RAM-Ball display base with ball with slots in the DU isolation assembly (1) bottom plate.

b. Install four square neck bolts (21), flat washers (9), lock washers (8) and self-locking wing nuts (22) on DU RAM-Ball adapter plate (2) and DU isolation assembly (1) bottom plate.

CAUTION

Ensure RAM-Ball is free of dirt and contaminants before reassembling. Failure to comply can result in slippage or excess wear of RAM-Ball assembly.

c. Inspect and clean RAM-Ball socket arm, display and mounting base with ball, as necessary, using clean lint-free wipes.

d. Insert RAM-Ball display base with ball into RAM-Ball socket arm.

e. Adjust viewing angle and tighten RAM-Ball knob.

f. Secure W2 display cable and ground strap to DU isolation assembly (1) bottom plate using tie-wraps.

g. Dress tie-wraps using diagonal wire cutters.

h. Install DU IAW Unit Maintenance Manual TM 11-7010-326-20&P, Chapter 2.

i. Perform Functional Check IAW paragraph S–6.1.

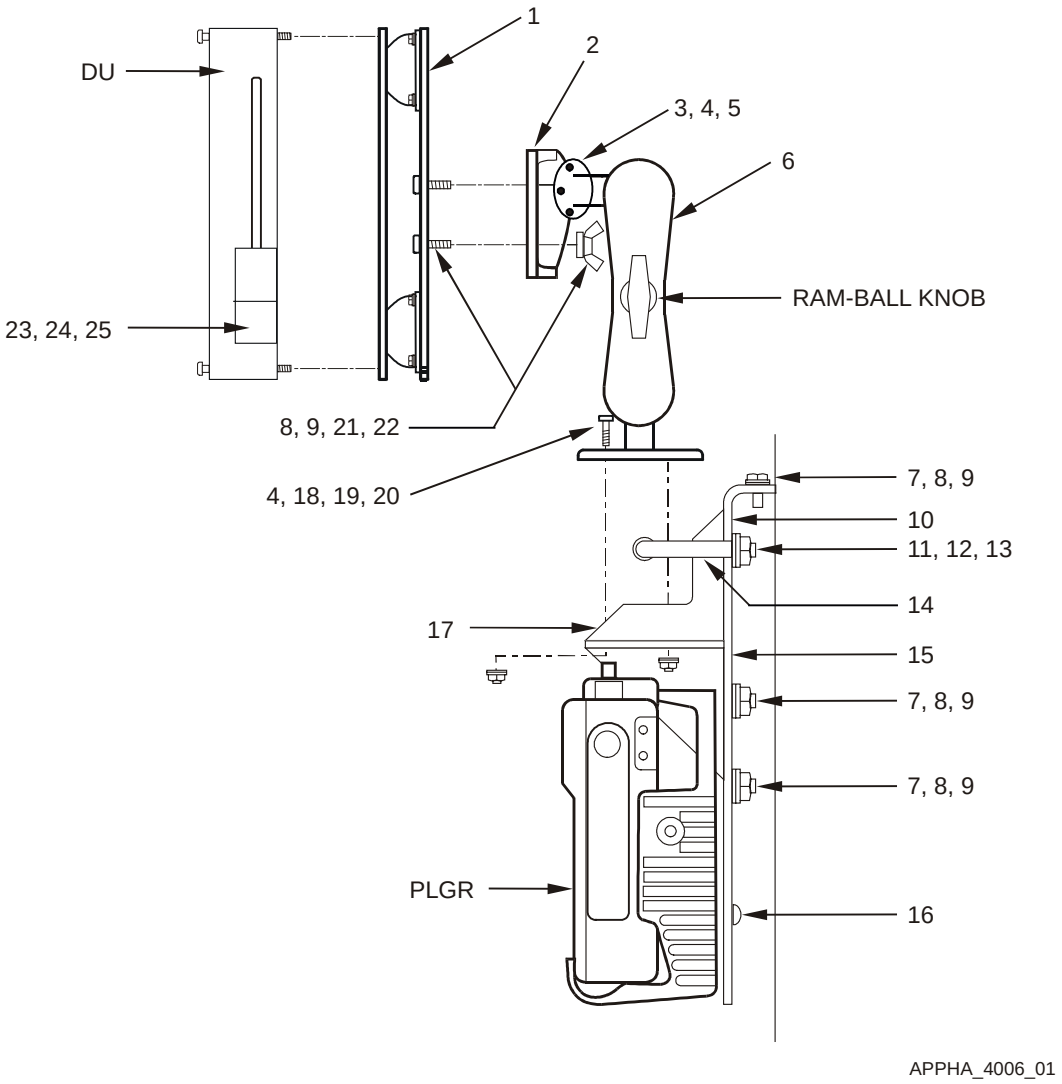

Figure S-6. Remove and Replace DU Isolation Assembly and RAM-Ball Assembly

Key and Parts List for Figure S-6.

ITEM NO.	NOMENCLATURE	CAGE CODE	PART NUMBER	NSN	QTY	SMR
1	(DU isolation assembly) Plate, Resilient Mount DU	0J198	872870-1		1	PAODD
2	(DU RAM-Ball adapter plate) Bracket, Mounting DU	0J198	872875-1		1	XBOOO
3	Screw, Pan Head	96906	MS35207-264	5305-00-989-7435	3	PAOZZ
4	Washer, Lock	96906	MS35338-43	5310-00-045-3296	6	PAOZZ
5	Washer, Flat	96906	MS27183-43	5310-00-727-8353	3	PAOZZ
6	(RAM-Ball Assembly) Mount, RAM-Ball	0J198	889498-1		1	PAOZZ
7	Screw, Cap, Hexagon	80204	B1821AH025C100N	5305-01-389-7984	8	PAOZZ
8	Washer, Lock	96906	MS35338-44	5310-00-582-5965	12	PAOZZ
9	Washer, Flat	96906	MS27183-10	5310-00-809-4058	12	PAOZZ
10	Plate, DU Backing	0J198	866040-2		1	PAOZZ
11	Washer, Flat	96906	MS27183-12	5310-00-081-4219	2	PAOZZ
12	Washer, Lock	96906	MS35338-45	5310-00-407-9566	2	PAOZZ
13	Nut, Plain, Hexagon	96906	MS35650-3312	5310-00-054-4892	2	PAOZZ
14	Bar, Grab	0J198	866039-1		1	XBOZZ
15	Plate, PLGR Backing	0J198	866040-1		2	PAOZZ
16	Screw, Machine	96906	MS35207-265	5305-00-993-1848	5	PAOZZ
17	Bracket, DU/PLGR	0J198	866037-1		1	XBOZZ
18	Screw, Pan Head	96906	MS35207-267	5305-00-993-1851	3	PAOZZ
19	Washer, Flat	96906	MS27183-8	5310-00-809-8546	3	PAOZZ
20	Nut, Plain, Hexagon	96906	MS35650-302	5310-00-934-9751	3	PAOZZ
21	Bolt, Square Neck	96906	MS35751-17	5306-00-889-2943	4	PAOZZ
22	Nut, Self-Locking, Wing	96906	MS51553-420	5310-01-384-2546	4	PAOZZ
--	Assembly, DU Lock	0J198	872843-1		1	XBOOO
23	Bracket, Locking	0J198	861871-3		1	XBOZZ
24	Washer, Lock	96906	MS35338-42	5310-00-045-3299	2	PAOZZ
25	Flat Head Screw	80205	MS35190-253	5305-00-059-4568	2	PAOZZ
--	Strap, Tie Down, Elect	39428	7130K31		50	PAOZZ

S–6.9 REMOVE/REPLACE RAM-BALL ASSEMBLY

Refer to Figure S-6.

NOTE

Ground straps are attached to components at one end (PU and DU) and a frame ground at the other end. Regardless of where the ground strap terminates, it is usually a burnished (void of paint) area. If the ground strap is removed from a burnished area, make sure to return it to the same burnished area. Where applicable, always connect the ground strap first when assembling, and disconnect the ground strap last when disassembling.

S–6.9.1 REMOVE RAM-BALL ASSEMBLY

WARNING

Before conducting maintenance involving the removal and replacement of system components, ensure that all power to the FBCB2 system is off (including power from the vehicle). Failure to comply with warning may result in equipment damage or injury to personnel.

a. Power down AN/UYK-128(V) system IAW Operator's Manual TM 11-7010-326-10, or Pocket Guide TB 11-7010-326-10.

b. Remove DU IAW Unit Maintenance Manual TM 11-7010-326-20&P, Chapter 2.

NOTE

Note cable routing and tie-wrap locations before removing cable or tie-wraps.

c. Remove tie-wraps securing W2 display cable and ground strap to DU isolation assembly (1) using diagonal wire cutters.

d. Loosen RAM-Ball knob while supporting DU isolation assembly (1) until RAM-Ball display base with ball can be lifted free of RAM-Ball socket arm.

e. Remove three pan head screws (3), lock washers (4) and flat washers (5) from display base with ball and DU RAM-Ball adapter plate (2) using a No. 2 cross tip screwdriver.

f. Remove RAM-Ball display base with ball from DU RAM-Ball adapter plate (2) and DU isolation assembly (1) bottom plate.

g. Remove RAM-Ball socket arm from RAM-Ball mounting base with ball on dashboard-mounted DU/PLGR bracket (17).

h. Remove three pan head screws (18), lock washers (4), flat washers (19) and hex nuts (20) from RAM-Ball mounting base with ball and DU/PLGR bracket (17) using 3/8" open-end wrench and No. 2 cross tip screwdriver.

S–6.9.2 REPLACE RAM-BALL ASSEMBLY

a. Align three holes in RAM-Ball mounting base with ball with DU/PLGR bracket (17) installation holes.

b. Install three pan head screws (18), lock washers (4), flat washers (19) and hex nuts (20) using 3/8” open-end wrench and No. 2 cross-tip screwdriver to secure the RAM-Ball mounting base with ball to the DU/PLGR bracket (17).

CAUTION

Ensure RAM-Ball is free of dirt and contaminants before reassembling. Failure to comply can result in slippage or excess wear of RAM-Ball assembly.

c. Inspect and clean RAM-Ball socket arm, display and mounting base with ball, as necessary, using clean lint-free wipes.

d. Install RAM-Ball socket arm upright on RAM-Ball mounting base with ball.

e. Align three holes in RAM-Ball display base with ball with holes in DU RAM-Ball adapter plate (2) on DU isolation assembly (1) bottom plate.

f. Install three pan head screws (3), lock washers (4) and flat washers (5) using a No. 2 cross-tip screwdriver.

g. Insert RAM-Ball display base with ball into RAM-Ball socket arm.

h. Adjust viewing angle and tighten RAM-Ball knob.

i. Install DU IAW Unit Maintenance Manual TM 11-7010-326-20&P, Chapter 2.

j. Secure W2 display cable and ground strap to DU isolation assembly using tie-wraps.

k. Dress tie-wraps using diagonal wire cutters.

l. Perform Functional Check IAW paragraph S–6.1.

S–6.10 REMOVE/REPLACE KEYBOARD UNIT (KU) STOWAGE BOX

Refer to Figure S-7.

S–6.10.1 REMOVE KEYBOARD UNIT (KU) STOWAGE BOX

a. Remove keyboard from stowage box, if stowed.

NOTE

To allow additional clearance when moving seat backrest, loosen rear curbside screw securing SINCGARS MB.

b. Loosen rear curbside screw securing SINCGARS MB and move passenger seat backrest forward, if necessary.

c. Remove two hex head screws (6), lock washers (7) and flat washers (8) using a 7/16” socket with ratchet and 12” extension from KU mounting bracket (5) on floor behind passenger seat.

d. Remove KU mounting bracket (5) with attached KU stowage box (1).

e. Loosen four KU stowage box captive screws (3) until the captive screws move freely using a No. 2 cross-tip screwdriver.

f. Remove KU stowage box (1) from KU mounting bracket (5).

S–6.10.2 REPLACE KEYBOARD UNIT (KU) STOWAGE BOX

a. Align four KU stowage box captive screws (3) with KU mounting bracket (5) installation holes.

b. Tighten four captive screws (3) using a No. 2 cross-tip screwdriver.

c. Insert KU mounting bracket (5) with attached KU stowage box (1) onto floor behind passenger seat.

d. Align two holes in KU mounting bracket (5) with installation holes in floor.

e. Install two hex head screws (6), lock washers (7) and flat washers (8) using a 7/16” socket with ratchet and 12” extension.

f. Position passenger seat backrest and secure rear curbside screw of SINCGARS MB, if necessary.

g. Stow keyboard, if necessary.

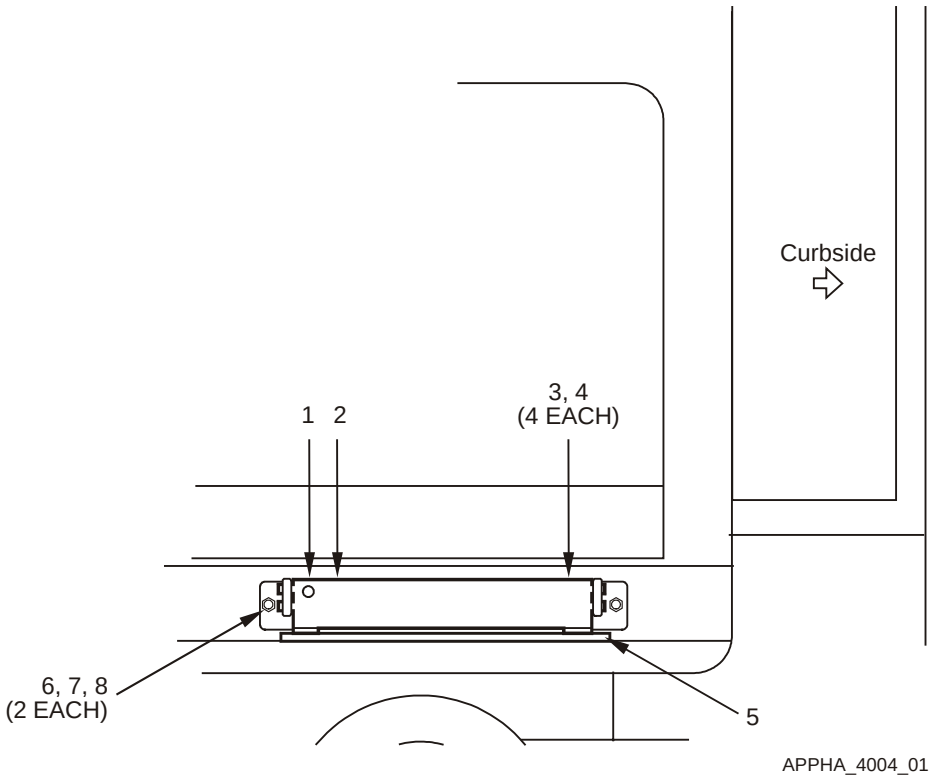

Figure S-7. Remove and Replace Keyboard Unit (KU) Stowage Box

Key and Parts List for Figure S-7.

ITEM NO.	NOMENCLATURE	CAGE CODE	PART NUMBER	NSN	QTY	SMR
1	Box, KU Stowage	0J198	872845-1	2540-01-481-5744	1	PAODD
2	Label, Keyboard Box	0J198	881323-1		1	PAOZZ
3	Screw, Captive Panel	57177	PH207-05SS1032		4	PAOZZ
4	Retainer, Panel Screw	57177	214-03SS10-32		4	PAOZZ
5	Bracket, KU Mounting	0J198	866038-1		1	XBOZZ
6	Screw, Cap, Hexagon	80204	B1821AH025C100N	5305-01-389-7984	2	PAOZZ
7	Washer, Lock	96906	MS35338-44	5310-00-582-5965	2	PAOZZ
8	Washer, Flat	96906	MS27183-10	5310-00-809-4058	2	PAOZZ

S–6.11 REMOVE/REPLACE KEYBOARD UNIT (KU) STOWAGE BOX DOOR LATCHES

Refer to Figure S-8.

S–6.11.1 REMOVE KEYBOARD UNIT (KU) STOWAGE BOX DOOR LATCHES

a. Remove KU stowage box IAW paragraph S–6.10.1.

b. Pull rubber T-handles and unfasten KU stowage box door latches, if necessary.

c. Remove two pan head screws (1), lock washers (2) and flat washers (3) from each KU stowage box door latch (4) using a No. 2 cross-tip screwdriver.

d. Remove KU stowage box door latch (4).

S–6.11.2 REPLACE KEYBOARD UNIT (KU) STOWAGE BOX DOOR LATCHES

NOTE

The same KU stowage box door latch part is used for each side of the keyboard stowage box. There is a bumper on one side of the latch that should be positioned toward the side of the keyboard stowage box when fastened.

a. Align KU stowage box door latch mounting holes with mounting holes in KU stowage box.

b. Install and tighten two pan head screws (1), lock washers (2) and flat washers (3) for each KU stowage box door latch (4), using No. 2 cross-tip screwdriver.

c. Pull rubber T-handles and fasten KU stowage box door latches.

d. Replace KU stowage box IAW paragraph S–6.10.2.

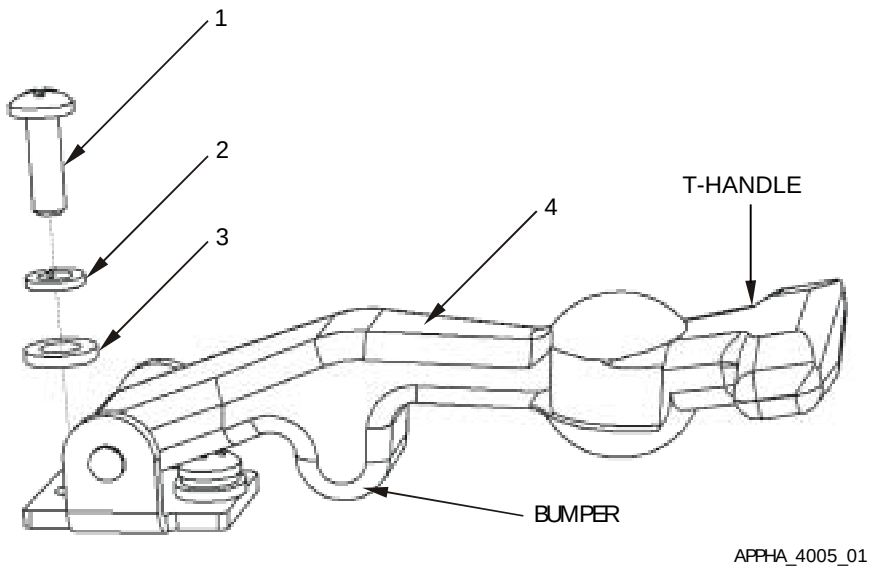

Figure S-8. Remove and Replace Keyboard Unit (KU) Stowage Box Door Latch

Key and Parts List for Figure S-8.

ITEM NO.	NOMENCLATURE	CAGE CODE	PART NUMBER	NSN	QTY	SMR
1	Screw, Pan Head	96906	MS35206-229	5305-00-984-4989	4	PAOZZ
2	Washer, Lock	96906	MS35338-41	5310-00-045-4007	4	PAOZZ
3	Washer, Flat	96906	MS27183-5	5310-00-983-8483	4	PAOZZ
4	(KU stowage box door latch) Latch, Thumb	94222	37-20-071-20	5340-01-351-3340	2	PAOZZ

This page intentionally left blank.

APPENDIX T

SUPPLEMENTARY INFORMATION FOR

M1097/M1037 RIGID WALL SHELTER (RWS)

TABLE OF CONTENTS

		Page
T–1	GENERAL	T–3
T–2	COMPONENT ITEM NUMBERS AND PART NUMBERS	T–3
T–3	SYSTEM INTERFACES	T–4
	T–3.1 MECHANICAL	T–4
	T–3.2 CABLE INTERFACES	T–4
T–4	COMPONENT LOCATION	T–6
	T–4.1 GENERAL LOCATION	T–6
	T–4.2 MOUNTING	T–7
T–5	PLATFORM-UNIQUE TROUBLESHOOTING	T–9
T–6	REMOVAL/REPLACEMENT IN THE PLATFORM	T–9
	T–6.1 FUNCTIONAL CHECK	T–9
	T–6.2 REMOVE/REPLACE W1 POWER CABLE	T–10
	T–6.3 REMOVE/REPLACE W2 DISPLAY CABLE	T–11
	T–6.4 REMOVE/REPLACE W3 SERIAL INTERFACE ADAPTER DEVICE (SIAD)	T–12
	T–6.5 REMOVE/REPLACE W3P PLGR CABLE	T–13
	T–6.6 REMOVE/REPLACE W3N INC CABLE	T–14
	T–6.7 REMOVE/REPLACE PU ISOLATION ASSEMBLY	T–16
	T–6.8 REMOVE/REPLACE DU ISOLATION ASSEMBLY	T–19
	T–6.9 REMOVE/REPLACE RAM-BALL ASSEMBLY	T–22
	T–6.10 REMOVE/REPLACE KEYBOARD UNIT (KU) STOWAGE BOX	T–25
	T–6.11 REMOVE/REPLACE KEYBOARD UNIT (KU) STOWAGE BOX DOOR LATCHES	T–28

LIST OF ILLUSTRATIONS

Page
Figure T-1. Equipment Interface Block Diagram T–5
Figure T-2. Relative Component Locations T–6
Figure T-3. Top-Down Mounting Detail Display, PU and Keyboard Stowage Box T–7
Figure T-4. Front Detail Rack-Mounted Components T–8
Figure T-5. Cable Run T–15
Figure T-6. Remove and Replace PU Isolation Assembly T–18
Figure T-7. Remove and Replace DU Isolation Assembly T–21
Figure T-8. Remove and Replace Ram-Ball Assembly T–24
Figure T-9. Remove and Replace Keyboard Unit (KU) Stowage Box T–26
Figure T-10. Remove and Replace Keyboard Unit (KU) Stowage Box Door Latches T–28

T–1 GENERAL

This appendix describes the interfaces between the FBCB2 equipment and the M1097/M1037 Rigid Wall Shelter (RWS). This appendix also identifies the component parts of the M1097/M1037 RWS platform installation kit and details the removal and replacement procedures particular to the M1097/M1037.

T–2 COMPONENT ITEM NUMBERS AND PART NUMBERS

Key and Parts List tables contained in the Removal and Replacement section of this Appendix serve a dual purpose. Use the Item Numbers in the Key to identify components and attaching hardware shown in the Figures illustrating the tasks. The nomenclature and part number for the hardware and equipment mounting components of the installation kit also are keyed to the Item Numbers in the tables. Additional parts ordering information, such as Contractor and Government Entity code (CAGE); National Stock Number (NSN); quantity; and Source, Maintenance, and Recoverability (SMR) codes, are provided. The Key and Parts List follow the task illustrations.

T–3 SYSTEM INTERFACES

T–3.1 MECHANICAL

The mechanical hardware-to-hardware interfaces include:

a. Cables

b. Processor Unit (PU)

c. Display Unit (DU)

d. Keyboard Unit (KU)

T–3.2 CABLE INTERFACES

Figure T-1 illustrates a block diagram of the interface between FBCB2 equipment and the M1097/M1037 RWS (Platform). Figure T-1 also illustrates the signal and control interfaces along with the terminal connector labels (e.g., P1, P2). The purpose of each cable is listed below:

Cable Name	Purpose
W1–Cable	Supplies vehicle power (28 VDC) to the AN/UYK-128(V) computer and its subassemblies.
W2–Cable	Supplies power and signals to the Display Unit (DU) and Keyboard Unit (KU). Returns Man Machine Interface (MMI) information from the KU to the Processor Unit (PU).
W3–Cable	The Serial Interface Adapter Device (SIAD) is a conduit assembly that breaks out each of the serial interface ports to a connector.
W3P–Cable	Collects position and time information from the PLGR.
W3N–Cable	Provides duplex communication between the PU, Internet Controller (INC) and radios.
W4–Cable	Audio cable (not used in this platform).
W5–Cable	The Expansion Interface Adapter Device (EIAD) is connected to the Universal Serial Bus (USB) connector only when this vehicle is to be used in a Tactical Operations Center (TOC) setup. When used in this configuration, the EIAD is connected between the PU J5 connector and local router.
Ground Strap	Provides safety ground for the PU.
Ground Strap	Provides safety ground for the DU.

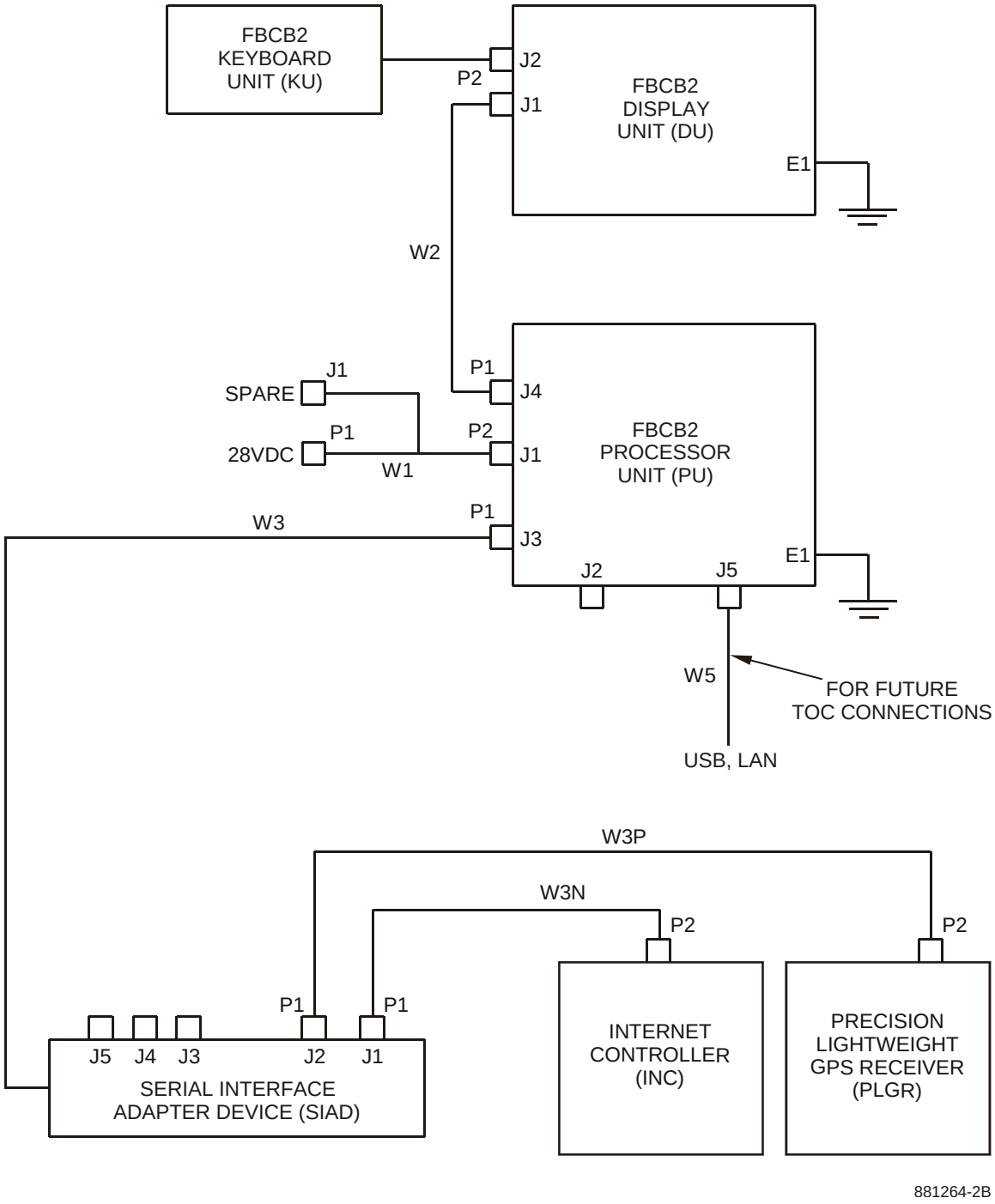

Figure T-1. Equipment Interface Block Diagram

T–4 COMPONENT LOCATION

T–4.1 GENERAL LOCATION

Figure T-2 shows the relative location of the FBCB2 computer equipment and mounting components in the M1097/M1037 Rigid Wall Shelter (RWS). In this installation, there are three mounting rack configurations. The earlier version utilized one 24” rack roadside. The later version has one 24” rack and one 19” rack side-by-side. The illustrations in this technical bulletin depict the later version with both mounting racks.

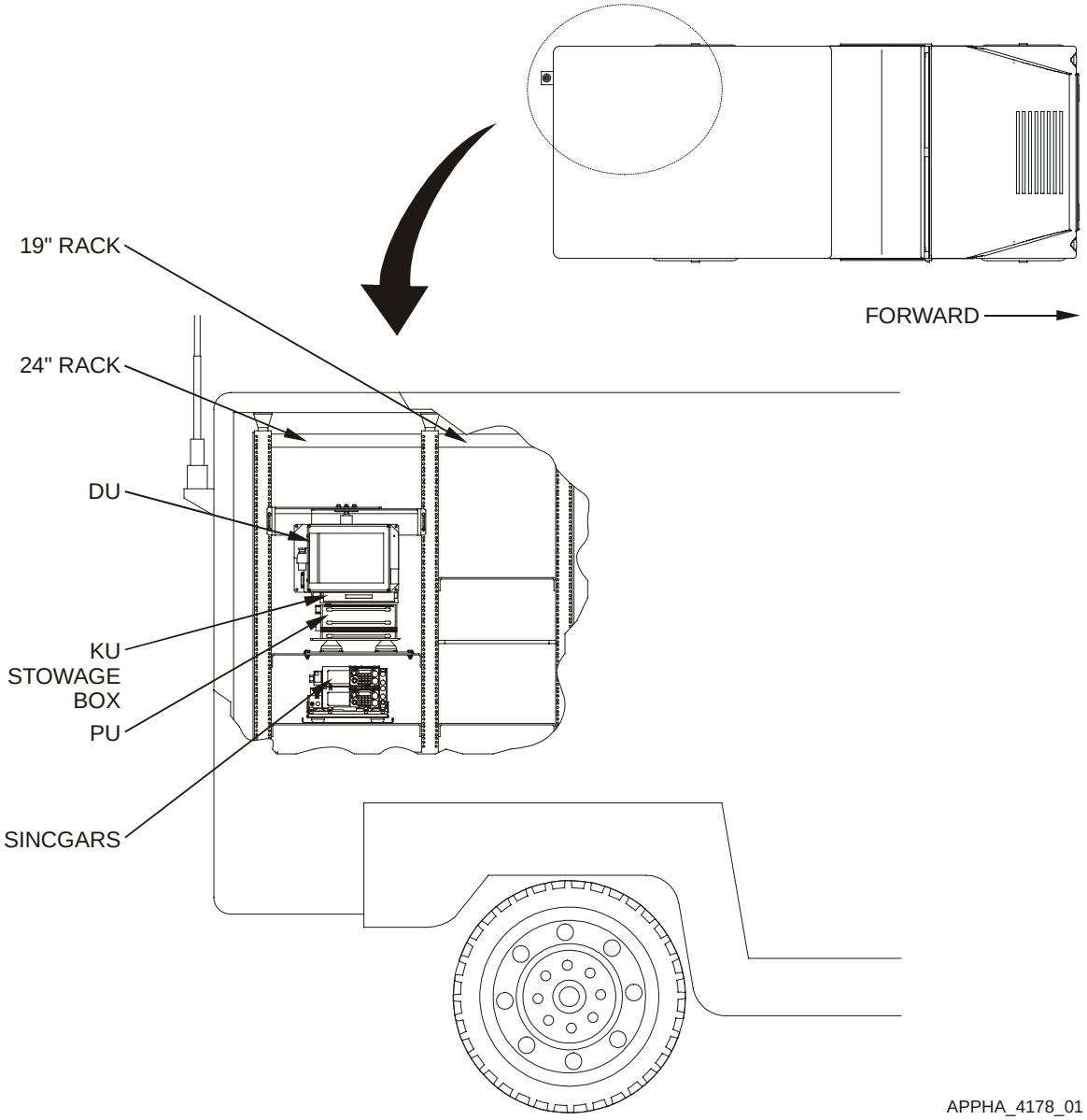

Figure T-2. Relative Component Locations

T–4.2 MOUNTING

T–4.2.1 KU STOWAGE BOX, PU AND DU MOUNTING

Figure T-3 shows a top-down view of the DU, KU stowage box and the PU mounted below.

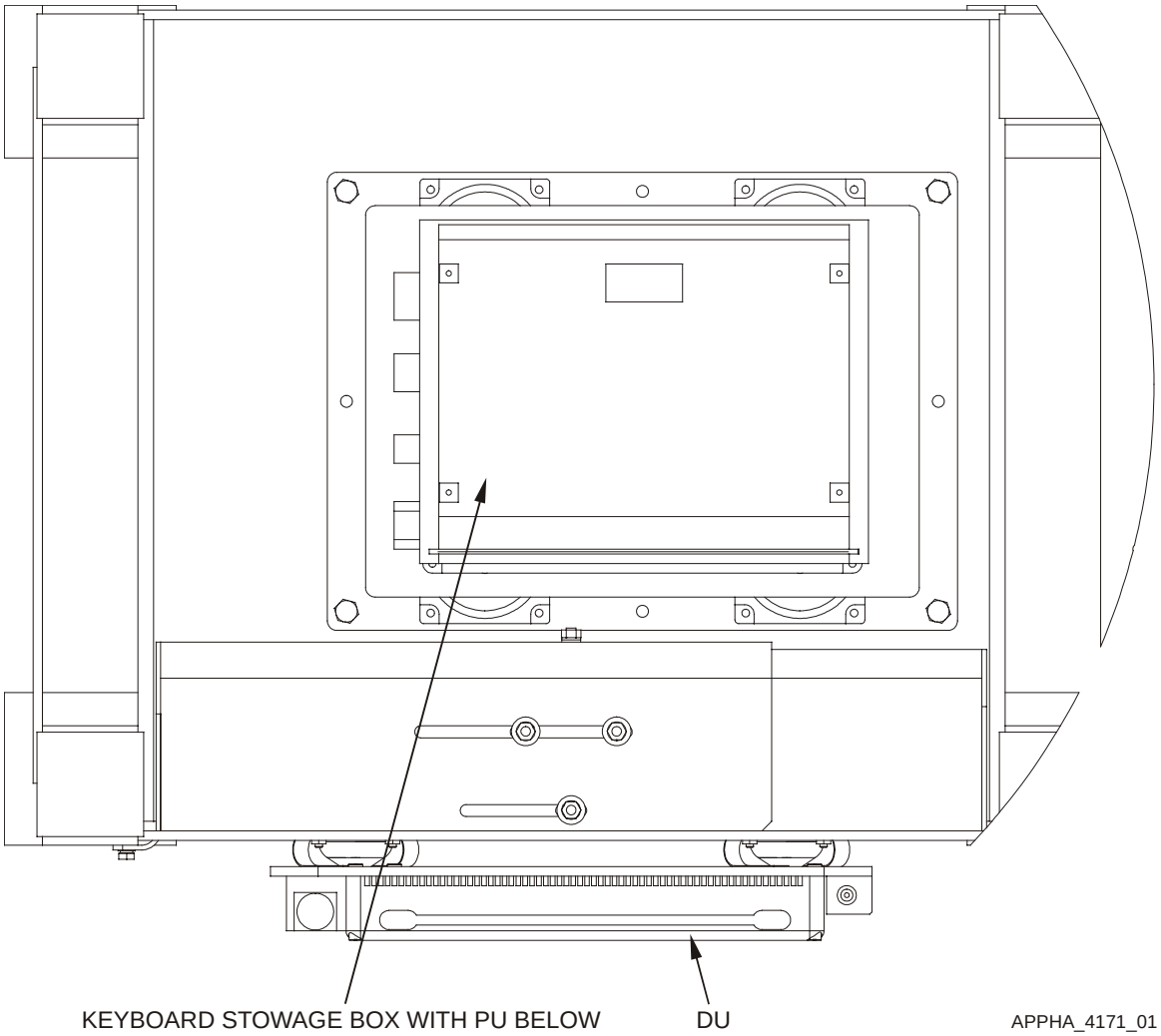

Figure T-3. Top-Down Mounting Detail Display, PU and Keyboard Stowage Box

T–4.2.2 PU AND DU MOUNTING

Figure T-4 illustrates the shelf-mounted PU and RAM-Ball-mounted display in the same 24” rack, with the SINCGARS just below.

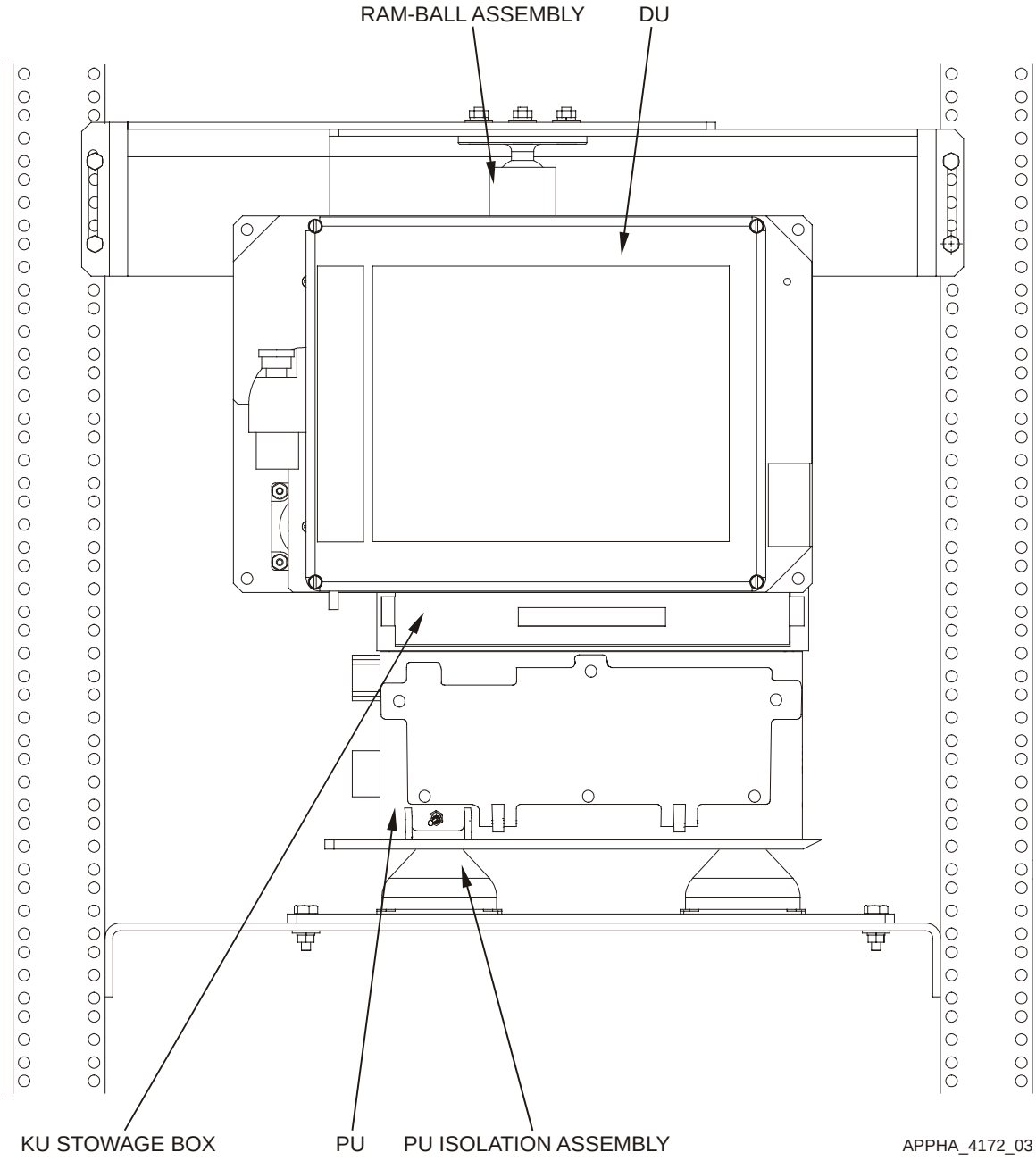

Figure T-4. Front Detail Rack-Mounted Components

T–5 PLATFORM-UNIQUE TROUBLESHOOTING

No unique troubleshooting procedures are required for this platform.

T–6 REMOVAL/REPLACEMENT IN THE PLATFORM

Most installations must be tailored to the platform. Cables and brackets are unique to the installation. Before a part or assembly is removed from a vehicle, fill out a “Maintenance Request” DA Form 2407. One copy of this completed form must remain with the vehicle and the remaining copies must be kept with the failed component. To prove the operability of the system after an item is replaced, perform the system Functional Check.

T–6.1 FUNCTIONAL CHECK

T–6.1.1 POWER UP

Power up and initialize all interface equipment and the AN/UYK-128(V) In Accordance With (IAW) Operator’s Manual TM 11-7010-326-10, or Pocket Guide TB 11-7010-326-10.

T–6.1.2 VERIFICATION

NOTE

Observe that the Display Unit PWR, DISP and CPU green LED lights are lit.

a. Observe that the PLGR synchronizes with PU, indicated by the PLGR dialog box showing green.

b. Observe that the Router synchronizes with the PU, indicated by the Router dialog box showing green.

c. At the Session Manager screen, select OPS button to display the OPS screen.

d. Verify the GPS status is either green or amber on the Classification/Status Bar.

e. Verify the Communications status is either green or amber on the Classification/Status Bar.

T–6.1.3 POWER DOWN

Power down all interface equipment and the AN/UYK-128(V) IAW the Operator’s Manual TM 11-7010-326-10, or Pocket Guide TB 11-7010-326-10.

T–6.2 REMOVE/REPLACE W1 POWER CABLE

Refer to Figure T-5.

T–6.2.1 REMOVE W1 POWER CABLE

WARNING

Before conducting maintenance involving the removal and replacement of system components, ensure that all power to the FBCB2 system is off (including power from the vehicle). Failure to comply with warning may result in equipment damage or injury to personnel.

a. Power down AN/UYK-128(V) system IAW Operator's Manual TM 11-7010-326-10, or Pocket Guide TB 11-7010-326-10.

b. Power down SINCGARS IAW TM 11-5820-890-10-8.

c. Unlatch and slide Vehicle Amplifier-Adapter (VAA) AM-7239/VRC forward to access W1-P1 power cable connector.

d. Disconnect W1-P1 cable connector from SINCGARS Mounting Base (MB) (MT-6352/VRC) A4-J2 connector.

e. Disconnect W1-P2 cable connector from PU J1 connector.

f. Install protective cap on PU J1 connector.

NOTE

Note cable routing and tie-wrap locations before removing cable or tie-wraps.

g. Remove tie-wraps securing W1 cable using diagonal wire cutters.

h. Remove W1 power cable (3).

T–6.2.2 REPLACE W1 POWER CABLE

a. Route W1 power cable (3) along existing cable harness.

b. Remove protective cap from PU J1 connector.

c. Connect W1-P2 cable connector to PU J1 connector.

d. Connect W1-P1 cable connector to SINCGARS Mounting Base (MB) (MT-6352/VRC) A4-J2 connector.

e. Slide VAA AM-7239/VRC back into original mounting position and secure IAW TM 11-5820-890-10-8.

f. Secure W1 cable using tie-wraps.

g. Dress tie-wraps using diagonal wire cutters.

h. Perform Functional Check IAW paragraph T–6.1.

T–6.3 REMOVE/REPLACE W2 DISPLAY CABLE

Refer to Figure T-5.

T–6.3.1 REMOVE W2 DISPLAY CABLE

WARNING

Before conducting maintenance involving the removal and replacement of system components, ensure that all power to the FBCB2 system is off (including power from the vehicle). Failure to comply with warning may result in equipment damage or injury to personnel.

a. Power down AN/UYK-128(V) system IAW Operator's Manual TM 11-7010-326-10, or Pocket Guide TB 11-7010-326-10.

b. Disconnect W2-P1 cable connector from PU J4 connector.

c. Install protective cap on PU J4 connector.

d. Disconnect W2-P2 cable connector from display J1 connector.

e. Install protective cap on display J1 connector.

NOTE

Note cable routing and tie-wrap locations before removing cable or tie-wraps.

f. Remove tie-wraps securing W2 cable using diagonal wire cutters.

g. Remove W2 display cable (5).

T–6.3.2 REPLACE W2 DISPLAY CABLE

a. Route W2 display cable (5).

b. Remove protective cap from display J1 connector.

c. Connect W2-P2 cable connector to display J1 connector.

d. Remove protective cap from PU J4 connector.

e. Connect W2-P1 cable connector to PU J4 connector.

f. Secure W2 cable using tie-wraps.

g. Dress tie-wraps using diagonal wire cutters.

h. Perform Functional Check IAW paragraph T–6.1.

T–6.4 REMOVE/REPLACE W3 SERIAL INTERFACE ADAPTER DEVICE (SIAD)

Refer to Figure T-5.

T–6.4.1 REMOVE W3 SERIAL INTERFACE ADAPTER DEVICE (SIAD)

WARNING

Before conducting maintenance involving the removal and replacement of system components, ensure that all power to the FBCB2 system is off (including power from the vehicle). Failure to comply with warning may result in equipment damage or injury to personnel.

a. Power down AN/UYK-128(V) system IAW Operator's Manual TM 11-7010-326-10, or Pocket Guide TB 11-7010-326-10.

b. Disconnect W3N-P1 INC cable connector from W3 SIAD J1 connector.

c. Disconnect W3P-P1 PLGR cable connector from W3 SIAD J2 connector.

d. Disconnect W3 SIAD-P1 cable connector from PU J3 connector.

e. Install protective cap on PU J3 connector.

NOTE

Note the cable routing and tie-wrap locations before removing cable or tie-wraps.

f. Remove tie-wraps securing W3 SIAD using diagonal wire cutters.

g. Remove W3 SIAD (4).

T–6.4.2 REPLACE W3 SERIAL INTERFACE ADAPTER DEVICE (SIAD)

a. Route W3 SIAD (4) into original position.

b. Remove protective cap from PU J3 connector.

c. Connect W3 SIAD-P1 cable connector to PU J3 connector.

d. Connect W3P-P1 PLGR cable connector to W3 SIAD J2 connector.

e. Connect W3N-P1 INC cable connector to W3 SIAD J1 connector.

f. Secure W3 SIAD using tie-wraps.

g. Dress tie-wraps using diagonal wire cutters.

h. Perform Functional Check IAW paragraph T–6.1.

T–6.5 REMOVE/REPLACE W3P PLGR CABLE

Refer to Figure T-5.

T–6.5.1 REMOVE W3P PLGR CABLE

WARNING

Before conducting maintenance involving the removal and replacement of system components, ensure that all power to the FBCB2 system is off (including power from the vehicle). Failure to comply with warning may result in equipment damage or injury to personnel.

a. Power down AN/UYK-128(V) system IAW Operator's Manual TM 11-7010-326-10, or Pocket Guide TB 11-7010-326-10.

b. Disconnect W3P-P1 cable connector from W3 SIAD J2 connector.

c. Unfasten over-center latch and remove PLGR from mounting rack.

d. Disconnect W3P-P2 cable connector from PLGR J2 connector using an offset flat-tip screwdriver.

NOTE

Note cable routing and tie-wrap locations before removing cable or tie-wraps.

e. Remove tie-wraps securing W3P cable using diagonal wire cutters.

f. Remove W3P cable (1).

T–6.5.2 REPLACE W3P PLGR CABLE

a. Route W3P cable (1).

b. Connect W3P-P2 cable connector to PLGR J2 connector using an offset flat-tip screwdriver.

c. Install PLGR into mounting rack and fasten over-center latch.

d. Connect W3P-P1 cable connector to W3 SIAD J2 connector.

e. Secure W3P cable using tie-wraps.

f. Dress tie-wraps using diagonal wire cutters.

g. Perform Functional Check IAW paragraph T–6.1.

T–6.6 REMOVE/REPLACE W3N INC CABLE

Refer to Figure T-5.

T–6.6.1 REMOVE W3N INC CABLE

WARNING

Before conducting maintenance involving the removal and replacement of system components, ensure that all power to the FBCB2 system is off (including power from the vehicle). Failure to comply with warning may result in equipment damage or injury to personnel.

a. Power down AN/UYK-128(V) system IAW Operator's Manual TM 11-7010-326-10, or Pocket Guide TB 11-7010-326-10.

b. Disconnect W3N-P1 cable connector from W3 SIAD J1 connector

c. Disconnect W3N-P2 cable connector from SINCGARS INC A2-J6 connector.

NOTE

Note cable routing and tie-wrap locations before removing cable or tie-wraps.

d. Remove tie-wraps securing W3N cable using diagonal cutters.

e. Remove W3N cable (2).

T–6.6.2 REPLACE W3N INC CABLE

a. Route W3N cable (2).

b. Connect W3N-P2 cable connector to SINCGARS INC A2-J6 connector.

c. Connect W3N-P1 cable connector to W3 SIAD J1 connector.

d. Secure W3N cable using tie-wraps.

e. Dress tie-wraps using diagonal wire cutters.

f. Perform Functional Check IAW paragraph T–6.1.

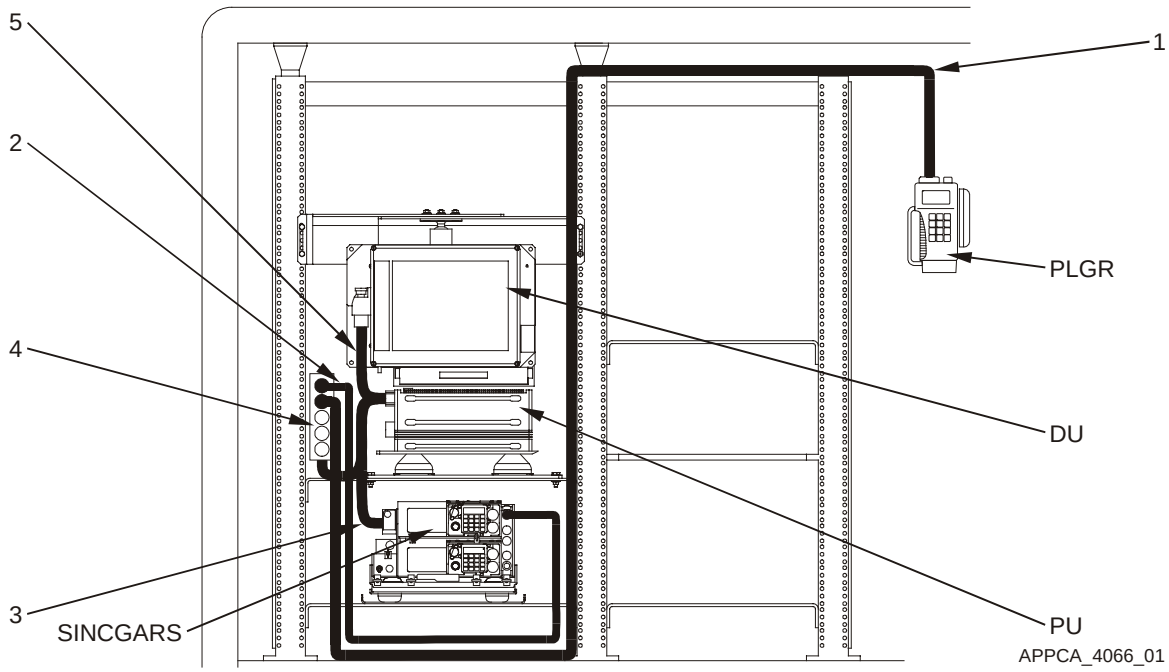

Figure T-5. Cable Run

Key and Parts List for Figure T-5

ITEM NO.	NOMENCLATURE	CAGE CODE	PART NUMBER	NSN	QTY	SMR
1	Cable Assembly W3P	0J198	881335-3	5995-01-478-4898	1	PAODD
2	Cable Assembly W3N	0J198	881336-3	5995-01-478-5080	1	PAODD
3	Cable Assembly W1	0J198	861888-1	5995-01-478-4897	1	PAODD
4	Adapter Assy, SIAD W3	0J198	881331-1	4920-01-478-3722	1	PAODD
5	Cable Assembly W2	0J198	881327-2	5995-01-478-4873	1	PAODD
--	Strap, Tie Down, Elect	39428	7130K31		A/R	PAOZZ
--	Holder, Cable, Tie 2w	39428	7566K27		A/R	PAOZZ

T–6.7 REMOVE/REPLACE PU ISOLATION ASSEMBLY

Refer to Figure T-6.

NOTE

Ground straps are attached to components at one end (PU and DU) and a frame ground at the other end. Regardless of where the ground strap terminates, it is usually a burnished (void of paint) area. If the ground strap is removed from a burnished area, make sure to return it to the same burnished area. Where applicable, always connect the ground strap first when assembling, and disconnect the ground strap last when disassembling.

T–6.7.1 REMOVE PU ISOLATION ASSEMBLY

WARNING

Before conducting maintenance involving the removal and replacement of system components, ensure that all power to the FBCB2 system is off (including power from the vehicle). Failure to comply with warning may result in equipment damage or injury to personnel.

a. Power down AN/UYK-128(V) system IAW Operator's Manual TM 11-7010-326-10, or Pocket Guide TB 11-7010-326-10.

NOTE

Do not remove the Removable Hard Disk Drive Cartridge (RHDDC), locking device, or KU stowage box from PU.

b. Loosen RAM-Ball knob and reposition DU so it does not interfere with removal of PU.

c. Tighten RAM-Ball knob.

d. Remove PU IAW Unit Maintenance Manual TM 11-7010-326-20&P, Chapter 2.

e. Remove one hex head screw (2), ground strap, flat washer (3), lock washer (4) and hex nut (5) from PU isolation assembly (1) bottom plate and mounting rack using a 7/16" socket with ratchet, 3" extension and 7/16" open-end wrench.

f. Remove remaining three hex head screws (2), flat washers (3), lock washers (4) and hex nuts (5) from PU isolation assembly (1) bottom plate and mounting rack using a 7/16" socket with ratchet, 3" extension and 7/16" open-end wrench.

g. Remove PU isolation assembly (6) from mounting rack.

T–6.7.2 REPLACE PU ISOLATION ASSEMBLY

a. Align four PU isolation assembly (1) bottom plate holes with installation holes in mounting rack.

NOTE

To ensure positive ground, PU ground strap must make direct contact with bare metal. Ensure PU ground strap is installed in its original location at the PU isolation assembly bottom plate mounting hole. Slip the ground strap on the mounting screw before inserting screw through hole and then installing the flat washer, lock washer and tightening nut from underneath.

b. Install one hex head screw (2), ground strap, flat washer (3), lock washer (4) and hex nut (5) on PU isolation assembly (1) bottom plate and mounting rack using a 7/16” socket with ratchet, 3” extension and 7/16” open-end wrench.

c. Install remaining three hex head screws (2), flat washers (3), lock washers (4) and hex nuts (5) on PU isolation assembly (1) bottom plate and mounting rack using a 7/16" socket with ratchet, 3" extension and 7/16" open-end wrench.

d. Replace PU IAW Unit Maintenance Manual TM 11-7010-326-20&P, Chapter 2.

e. Perform Functional Check IAW paragraph T–6.1.

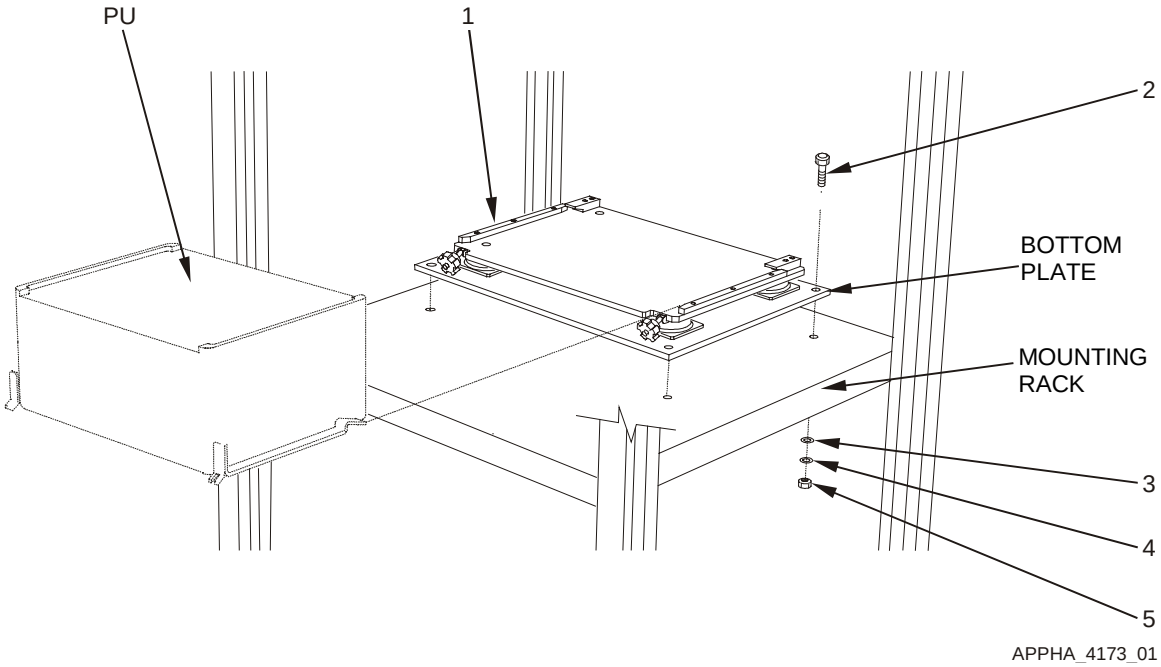

Figure T-6. Remove and Replace PU Isolation Assembly

Key and Parts List for Figure T-6

ITEM NO.	NOMENCLATURE	CAGE CODE	PART NUMBER	NSN	QTY	SMR
1	(PU Isolation Assembly) Plate, Resilient Mount PU	0J198	872826-1	5340-01-481-5742	1	PAODD
2	Screw, Cap, Hexagon	80204	B1821AH025C125N	5305-00-068-0509	4	PAOZZ
3	Washer, Flat	96906	MS27183-10	5310-00-809-4058	4	PAOZZ
4	Washer, Lock	96906	MS35338-44	5310-00-582-5965	4	PAOZZ
5	Nut, Plain, Hexagon	96906	MS35649-2252	5310-00-997-1888	4	PAOZZ
--	Assembly, PU Lock	0J198	861865-1		1	XBOOO
--	Bracket, Locking	0J198	861871-1		1	XBOZZ
--	Screw	80205	MS35190-253	5305-00-059-4568	2	PAOZZ

T–6.8 REMOVE/REPLACE DU ISOLATION ASSEMBLY

Refer to Figure T-7.

NOTE

Ground straps are attached to components at one end (PU and DU) and a frame ground at the other end. Regardless of where the ground strap terminates, it is usually a burnished (void of paint) area. If the ground strap is removed from a burnished area, make sure to return it to the same burnished area. Where applicable, always connect the ground strap first when assembling, and disconnect the ground strap last when disassembling.

T–6.8.1 REMOVE DU ISOLATION ASSEMBLY

WARNING

Before conducting maintenance involving the removal and replacement of system components, ensure that all power to the FBCB2 system is off (including power from the vehicle). Failure to comply with warning may result in equipment damage or injury to personnel.

a. Power down AN/UYK-128(V) system IAW Operator's Manual TM 11-7010-326-10, or Pocket Guide TB 11-7010-326-10.

b. Remove DU IAW Unit Maintenance Manual TM 11-7010-326-20&P, Chapter 2.

NOTE

Note cable routing and tie-wrap locations before removing cable or tie-wraps.

c. Remove tie-wraps securing W2 display cable and ground strap to DU isolation assembly using diagonal wire cutters.

CAUTION

Ensure support is provided to display while loosening RAM-Ball knob. Failure to comply could result in display falling from RAM-Ball mount causing equipment damage.

d. Loosen RAM-Ball knob while supporting DU isolation assembly (1) until RAM-Ball display base with ball can be lifted free from RAM-Ball socket arm.

e. Remove four self-locking wing nuts (4), spacers (5) and square neck-bolts (6) from RAM-Ball display base with ball and DU isolation assembly (1) bottom plate.

f. Remove DU isolation assembly (1) from RAM-Ball display base with ball.

T–6.8.2 REPLACE DU ISOLATION ASSEMBLY

a. Align four RAM-Ball display base with ball holes with slots in DU isolation assembly (1) bottom plate.

b. Install four square neck bolts (6), spacers (5) and self-locking wing nuts (4), on RAM-Ball display base with ball and DU isolation assembly (1) bottom plate.

CAUTION

Ensure RAM-Ball is free of dirt and contaminants before reassembling. Failure to comply can result in slippage or excess wear of RAM-Ball assembly.

c. Inspect and clean RAM-Ball socket arm and display base with ball, as necessary, using a clean lint-free wipes.

d. Insert RAM-Ball display base with ball into RAM-Ball socket arm.

e. Adjust viewing angle and tighten RAM-Ball knob.

f. Secure W2 display cable and ground strap to DU isolation assembly (1) bottom plate using tie-wraps.

g. Dress tie-wraps using diagonal wire cutters.

h. Install DU IAW Unit Maintenance Manual TM 11-7010-326-20&P, Chapter 2

i. Perform Functional Check IAW paragraph T–6.1.

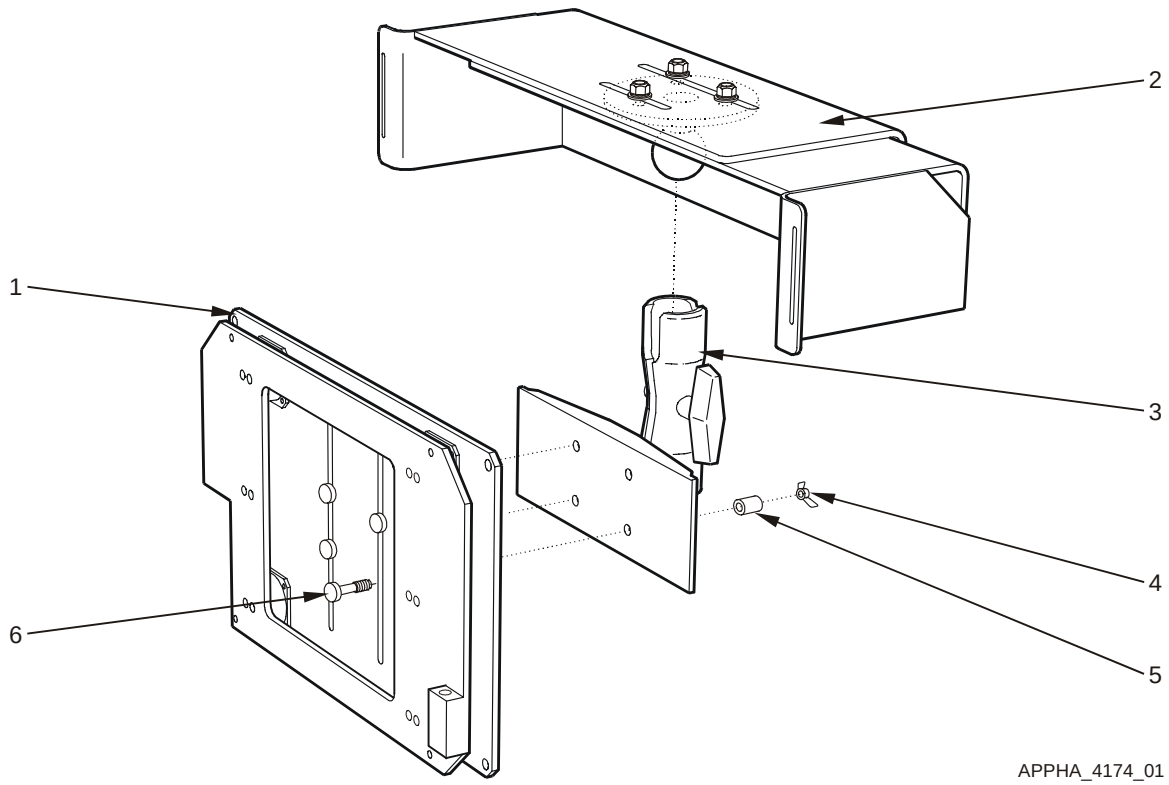

Figure T-7. Remove and Replace DU Isolation Assembly

Key and Parts List for Figure T-7

ITEM NO.	NOMENCLATURE	CAGE CODE	PART NUMBER	NSN	QTY	SMR
1	(DU Isolation Assembly) Plate, Resilient Mount DU	0J198	872871-1	5340-01-481-5743	1	PAODD
2	Bracket, Mounting DU	0J198	872838-1		1	XBOOO
--	Bracket, Left	0J198	872838-11		1	XBOZZ
--	Bracket, Right	0J198	872838-12		1	XBOZZ
3	Mount, RAM-Ball	0J198	889489-1		1	PAOZZ
4	Nut, Self-Locking, Wing	96906	MS51553-420	5310-01-384-2546	4	PAOZZ
5	Spacer, Aluminum	57177	10705AL315C		4	PAOZZ
6	Bolt, Square Neck	96906	MS35751-17	5306-00-889-2943	4	PAOZZ
--	Assembly, DU Lock	0J198	872843-1		1	XBOOO
--	Bracket, Locking	0J198	861871-3		1	XBOZZ
--	Screw	80205	MS35190-253	5305-00-059-4568	2	PAOZZ
--	Washer, Lock	96906	MS35338-42	5310-00-045-3299	2	PAOZZ

T–6.9 REMOVE/REPLACE RAM-BALL ASSEMBLY

Refer to Figure T-8.

NOTE

Ground straps are attached to components at one end (PU and DU) and a frame ground at the other end. Regardless of where the ground strap terminates, it is usually a burnished (void of paint) area. If the ground strap is removed from a burnished area, make sure to return it to the same burnished area. Where applicable, always connect the ground strap first when assembling, and disconnect the ground strap last when disassembling.

T–6.9.1 REMOVE RAM-BALL ASSEMBLY

WARNING

Before conducting maintenance involving the removal and replacement of system components, ensure that all power to the FBCB2 system is off (including power from the vehicle). Failure to comply with warning may result in equipment damage or injury to personnel.

a. Power down AN/UYK-128(V) system IAW Operator's Manual TM 11-7010-326-10, or Pocket Guide TB 11-7010-326-10.

b. Remove DU IAW Unit Maintenance Manual TM 11-7010-326-20&P, Chapter 2.

NOTE

Note cable routing and tie-wrap locations before removing cable or tie-wraps.

c. Remove tie-wraps securing W2 display cable and ground strap to DU isolation assembly using diagonal wire cutters.

CAUTION

Ensure support is provided to display while loosening RAM-Ball knob. Failure to comply could result in display falling from RAM-Ball mount causing equipment damage.

d. Loosen RAM-Ball knob while supporting DU isolation assembly until RAM-Ball display base with ball can be lifted free of RAM-Ball socket arm.

e. Remove four self-locking wing nuts (9), spacers (10) and square neck bolts (11) from Ram-Ball display base with ball and DU isolation assembly bottom plate.

f. Remove RAM-Ball socket arm from RAM-Ball mounting base with ball on display support bracket (4).

g. Remove three flat head screws (12), flat washers (7), lock washers (6) and hex nuts (5) from RAM-Ball mounting base with ball and display support bracket (4) using a 7/16" open-end wrench and No. 3 cross-tip screwdriver.

h. Remove RAM-Ball mounting base with ball from display support bracket (4).

T–6.9.2 REPLACE RAM-BALL ASSEMBLY

a. Align three holes in RAM-Ball mounting base with ball with display support bracket (4) installation holes.

b. Install three flat head screws (12), flat washers (7), lock washers (6) and hex nuts (5) using a 7/16” open-end wrench and No. 3 cross-tip screwdriver.

CAUTION

Ensure RAM-Ball is free of dirt and contaminants before reassembling. Failure to comply can result in slippage or excess wear of RAM-Ball assembly.

c. Inspect and clean RAM-Ball socket arm and display and mounting base with ball, as necessary, using clean lint-free wipes.

d. Install RAM-Ball socket arm on RAM-Ball mounting base with ball.

e. Align four holes in RAM-Ball display base with ball with slots in DU isolation assembly bottom plate.

f. Install four square neck bolts (11), spacers (10) and self-locking wing nuts (9) on Ram-Ball display base with ball and DU isolation assembly bottom plate.

g. Insert RAM-Ball display base with ball into RAM-Ball socket arm.

h. Adjust viewing angle and tighten RAM-Ball knob.

i. Install DU IAW Unit Maintenance Manual TM 11-7010-326-20&P, Chapter 2.

j. Secure W2 display cable and ground strap to DU isolation assembly using tie-wraps.

k. Dress tie-wraps using diagonal wire cutters.

l. Perform Functional Check IAW paragraph T–6.1.

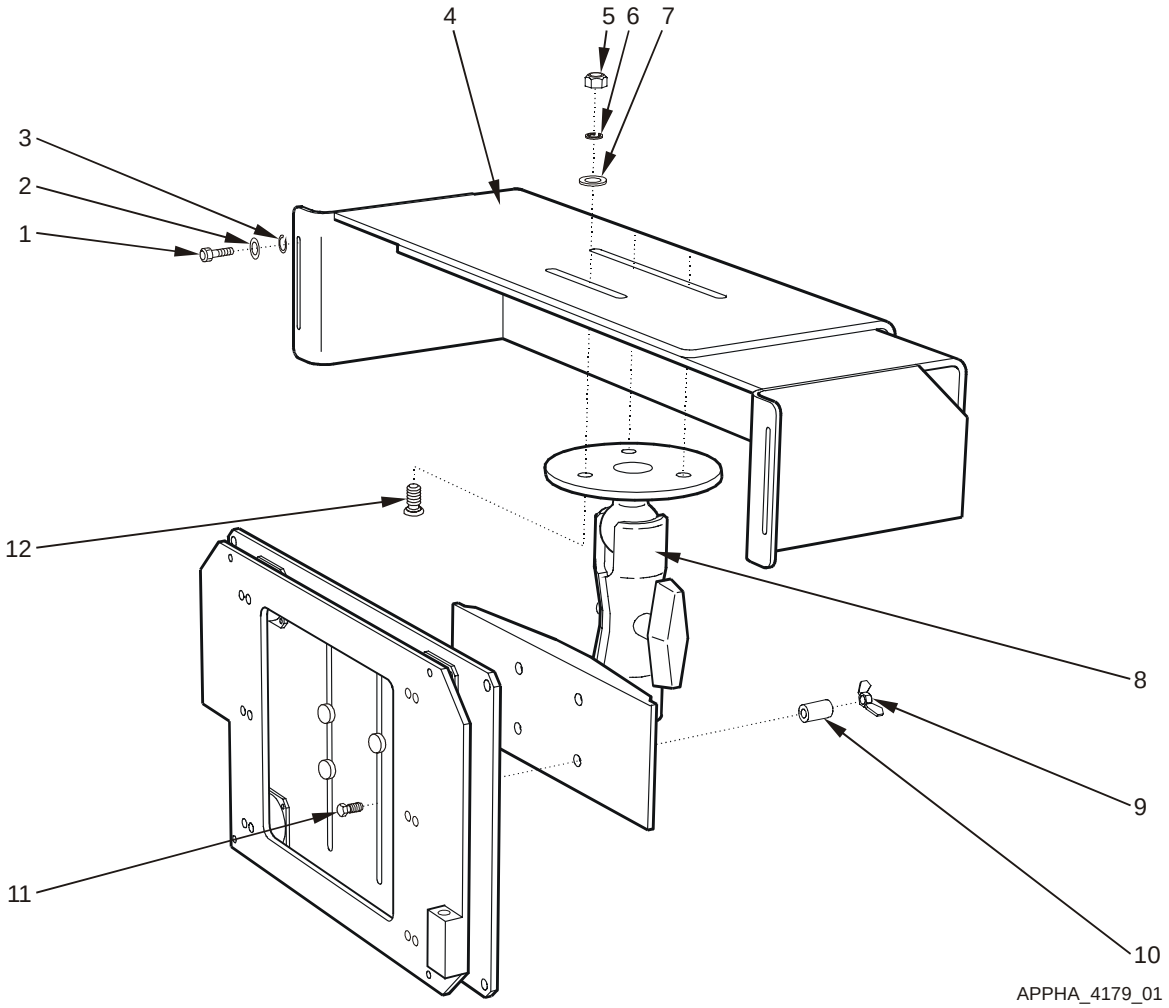

Figure T-8. Remove and Replace Ram-Ball Assembly

Key and Parts List for Figure T-8

ITEM NO.	NOMENCLATURE	CAGE CODE	PART NUMBER	NSN	QTY	SMR
1	Screw, Machine	39428	92314A831		8	PAOZZ
2	Washer, Lock	96906	MS35338-43	5310-00-045-3296	8	PAOZZ
3	Washer, Flat	96906	MS27183-8	5310-00-809-8546	8	PAOZZ
5	Nut, Plain, Hexagon	96906	MS35649-2252	5310-00-997-1888	8	PAOZZ
6	Washer, Lock	96906	MS35338-44	5310-00-582-5965	12	PAOZZ
7	Washer, Flat	96906	MS27183-10	5310-00-809-4058	12	PAOZZ
8	Mount, RAM-Ball	0J198	889489-1		1	PAOZZ
9	Nut, Self-Locking, Wing	96906	MS51553-420	5310-01-384-2546	4	PAOZZ
10	Spacer, Aluminum	57177	10705AL315C		4	PAOZZ
11	Bolt, Square Neck	96906	MS35751-17	5306-00-889-2943	4	PAOZZ
12	Screw, Flat Head	96906	MS35190-292	5305-00-990-1347	4	PAOZZ
4	Bracket, Mounting DU	0J198	872838-1		1	XBOOO
--	Bracket, Left	0J198	872838-11		1	XBOZZ
--	Bracket, Right	0J198	872838-12		1	XBOZZ

T–6.10 REMOVE/REPLACE KEYBOARD UNIT (KU) STOWAGE BOX

Refer to Figure T-9.

T–6.10.1 REMOVE KEYBOARD UNIT (KU) STOWAGE BOX

a. Loosen RAM-Ball knob and re-position DU to allow access to KU stowage box.

b. Remove keyboard from stowage box, if stowed.

c. Loosen four KU stowage box captive screws (2) until captive screws move freely using a No. 2 cross-tip screwdriver.

d. Remove KU stowage box (1).

T–6.10.2 REPLACE KEYBOARD UNIT (KU) STOWAGE BOX

a. Align four KU stowage box captive screws (2) with installation holes on PU.

b. Tighten four captive screws (2) using a No. 2 cross-tip screwdriver.

c. Stow keyboard, if necessary.

d. Loosen RAM-Ball knob and reposition DU for best viewing.

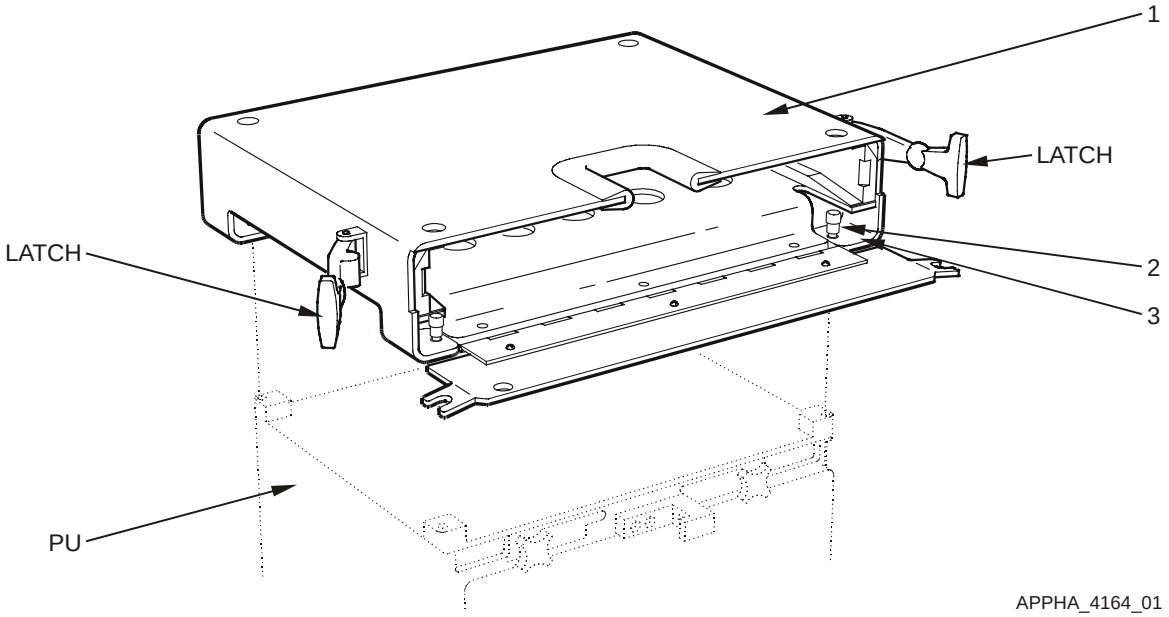

Figure T-9. Remove and Replace Keyboard Unit (KU) Stowage Box

Key and Parts List for Figure T-9

ITEM NO.	NOMENCLATURE	CAGE CODE	PART NUMBER	NSN	QTY	SMR
1	Box, KU Stowage	0J198	872845-1	2540-01-481-5744	1	PAODD
2	Screw, Captive Panel	57177	PH207-05SS1032		4	PAOZZ
3	Retainer, Panel Screw	57177	214-03SS10-32		4	PAOZZ
--	Case, Keyboard	0J198	872845-11		1	XBOOO
--	Bottom, Stowage Box	0J198	872845-12		1	XBOOO
--	Side Rail, Keybd Box	0J198	872845-13		1	XBOOO
--	Side Rail, Keybd Box	0J198	872845-14		1	XBOOO
--	Door, Keyboard Box	0J198	872845-15		1	XBOOO
--	Hinge, Keyboard Box	0J198	872845-16		1	XBOOO
--	Strip, Rubber	0J198	872845-17		1	XBOOO
--	Rivet, Solid, Csk	96906	MS20426AD-4-5	5320-00-117-6950	6	PAOZZ
--	Label, Keyboard Box	0J198	881323-1		1	PAOZZ
--	Screw, Pan Head	96906	MS35206-229	5305-00-984-4989	14	PAOZZ
--	Washer, Flat	96906	MS27183-5	5310-00-983-8483	16	PAOZZ
--	Washer, Lock	96906	MS35338-41	5310-00-045-4007	13	PAOZZ
--	Nut, Plain	96906	MS35649-262	5310-00-934-9747	3	PAOZZ
--	Rubber Edge Trim	39428	8507K16	5325-01-435-2840	9	PAOZZ
--	Adhesive					
--	Grip, Handle Assembly	0J198	861867-1		1	XBOOO
--	Grip, Handle	0J198	861869-1		1	XBOZZ
--	Screw, Machine	96906	MS35206-228	5305-00-984-4988	4	PAOZZ
--	Washer, Lock	96906	MS35338-41	5310-00-045-4007	4	PAOZZ
--	Tape, Shielding, Elect	39428	7648A34		1	XBOZZ

T–6.11 REMOVE/REPLACE KEYBOARD UNIT (KU) STOWAGE BOX DOOR LATCHES

Refer to Figure T-10.

T–6.11.1 REMOVE KEYBOARD UNIT (KU) STOWAGE BOX DOOR LATCHES

a. Pull rubber T-handles and unfasten KU stowage box door latches, if necessary.

b. Remove two pan head screws (1), lock washers (2) and flat washers (3) from each KU stowage box door latch (4) using a No. 2 cross-tip screwdriver.

c. Remove KU stowage box door latch (4).

T–6.11.2 REPLACE KEYBOARD UNIT (KU) STOWAGE BOX DOOR LATCHES

NOTE

The same KU stowage box door latch part is used for each side of the keyboard stowage box. Position the bumper on one side of the latch so that it is toward the side of the keyboard stowage box when fastened.

a. Align KU stowage box door latch mounting holes with mounting holes in KU stowage box.

b. Install and tighten two pan head screws (1), lock washers (2) and flat washers (3) for each KU stowage box door latch (4), using a No. 2 cross-tip screwdriver.

c. Pull rubber T-handles and fasten KU stowage box door latches.

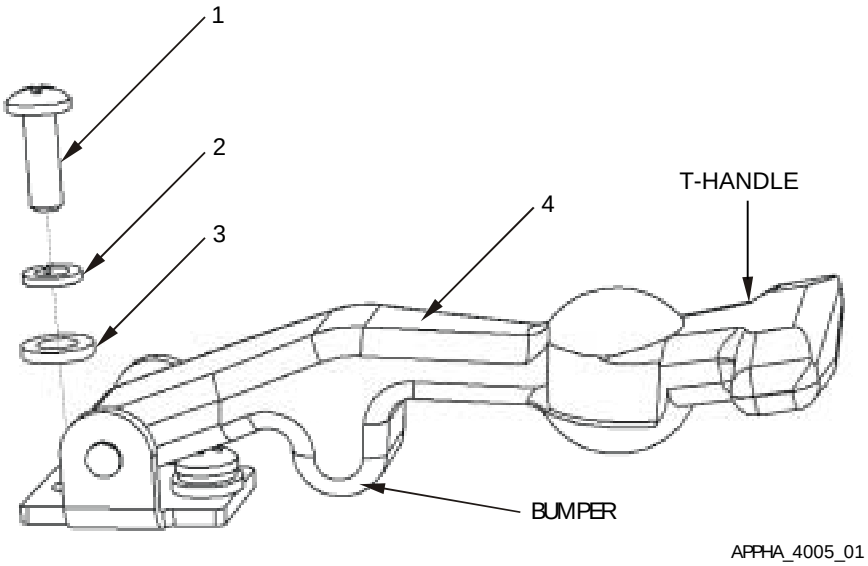

Figure T-10. Remove and Replace Keyboard Unit (KU) Stowage Box Door Latches

Key and Parts List for Figure T-10

ITEM NO.	NOMENCLATURE	CAGE CODE	PART NUMBER	NSN	QTY	SMR
1	Screw, Pan Head	96906	MS35206-229	5305-00-984-4989	4	PAOZZ
2	Washer, Lock	96906	MS35338-41	5310-00-045-4007	4	PAOZZ
3	Washer, Flat	96906	MS27183-5	5310-00-983-8483	4	PAOZZ
4	(KU stowage box door latch) Latch, Thumb	94222	37-20-071-20	5340-01-351-3340	2	PAOZZ

This page intentionally left blank.

APPENDIX U

SUPPLEMENTARY INFORMATION FOR

M992 FAASV

TABLE OF CONTENTS

Page
U–1 GENERAL U–3
U–2 COMPONENT ITEM NUMBERS AND PART NUMBERS U–3
U–3 SYSTEM INTERFACES U–3
U–3.1 MECHANICAL U–3
U–3.2 CABLE INTERFACES U–4
U–4 COMPONENT LOCATION U–6
U–4.1 GENERAL LOCATION U–6
U–4.2 MOUNTING U–7
U–5 PLATFORM-UNIQUE TROUBLESHOOTING U–9
U–6 REMOVAL/REPLACEMENT IN THE PLATFORM U–9
U–6.1 FUNCTIONAL CHECK U–9
U–6.2 REMOVE/REPLACE W1 POWER CABLE U–10
U–6.3 REMOVE/REPLACE W2 DISPLAY CABLES U–11
U–6.4 REMOVE/REPLACE USB REPEATER BOX U–13
U–6.5 REMOVE/REPLACE W3 SERIAL INTERFACE ADAPTER DEVICE (SIAD) U–14
U–6.6 REMOVE/REPLACE W3P PLGR CABLE U–15
U–6.7 REMOVE/REPLACE W3N INC CABLE U–16
U–6.8 REMOVE/REPLACE W4 AUDIO CABLE U–17
U–6.9 REMOVE/REPLACE PU ISOLATION ASSEMBLY U–20
U–6.10 REMOVE/REPLACE DU ISOLATION ASSEMBLY U–23
U–6.11 REMOVE/REPLACE RAM-BALL ASSEMBLY U–26
U–6.12 REMOVE/REPLACE RAM-BALL BRACKET U–28
U–6.13 REMOVE/REPLACE KEYBOARD UNIT (KU) STOWAGE BOX U–32
U–6.14 REMOVE/REPLACE KEYBOARD UNIT (KU) STOWAGE BOX DOOR LATCHES U–34

LIST OF ILLUSTRATIONS

Page
Figure U-1. Equipment Interface Block Diagram U–5
Figure U-2. Relative Component Locations U–6
Figure U-3. PU Mounted Beneath Fuse Rack U–7
Figure U-4. DU Mounting Side View U–8
Figure U-5. Cable Run U–18
Figure U-6. Remove and Replace PU Isolation Assembly U–22
Figure U-7. Remove and Replace DU Isolation Assembly U–25
Figure U-8. Remove and Replace Ram Ball Assembly and RAM-Ball Mounting Bracket..... U–30
Figure U-9. Remove and Replace Keyboard Unit (KU) Stowage Box U–32
Figure U-10. Remove and Replace Keyboard Unit (KU) Stowage Box Door Latch U–35

U–1 GENERAL

This appendix describes the interfaces between the FBCB2 equipment and the M992 FAASV. This appendix also identifies the component parts of the M992 FAASV platform installation kit and details the removal and replacement procedures particular to the M992 FAASV.

U–2 COMPONENT ITEM NUMBERS AND PART NUMBERS

Key and Parts List tables contained in the Removal and Replacement section of this Appendix serve a dual purpose. Use the Item Numbers in the Key to identify components and attaching hardware shown in the Figures illustrating the tasks. The nomenclature and part number for the hardware and equipment mounting components of the installation kit also are keyed to the Item Numbers in the tables. Additional parts ordering information, such as Contractor and Government Entity code (CAGE); National Stock Number (NSN); quantity; and Source, Maintenance and Recoverability (SMR) codes, are provided. The Key and Parts List follow the task illustrations.

U–3 SYSTEM INTERFACES

U–3.1 MECHANICAL

The mechanical hardware-to-hardware interfaces include:

a. Cables

b. Processor Unit (PU)

c. Display Unit (DU)

d. Keyboard Unit (KU)

U–3.2 CABLE INTERFACES

Figure U-1 illustrates a block diagram of the interface between the FBCB2 equipment and the M992 FAASV (Platform). Figure U-1 also illustrates the signal and control interfaces along with terminal connector labels (e.g., P1, P2). The purpose of each cable is listed below:

Cable Name	Purpose
W1–Cable	Supplies vehicle power (28 VDC) to the AN/UYK-128(V) computer and its subassemblies. The M992 FAASV W1 cable is 14 feet long.
W2–Cable	Supplies power and signals to the Display Unit (DU) and Keyboard Unit (KU). Returns Man Machine Interface (MMI) information from the KU to the Processor Unit (PU). The M992 FAASV configuration requires two 12-foot W2 cables connected by a digital data coupler (USB Repeater Box).
Repeater Box	The Universal Serial Bus (USB) Repeater Box is also known as a digital data coupler. Due to the distance between the Display Unit (DU) and the Processor Unit (PU), the Repeater Box, or relay, is necessary to correct distortion and restore the strength of electrical signals.
W3–Cable	The Serial Interface Adapter Device (SIAD) is a conduit assembly that breaks out each of the serial interface ports to a connector.
W3P–Cable	Collects position and time information from the PLGR. The W3P cable is 30 feet long in the M992 FAASV configuration.
W3N–Cable	Provides duplex communication between the PU, Internet Controller (INC) and radios. The W3N INC cable is 30 feet long.
W4–Cable	Connects audio signals from the PU to the Intercom system and Combat Vehicle Crew (CVC) Helmet.
Ground Strap	Provides safety ground for PU.
Ground Strap	Provides safety ground for DU.

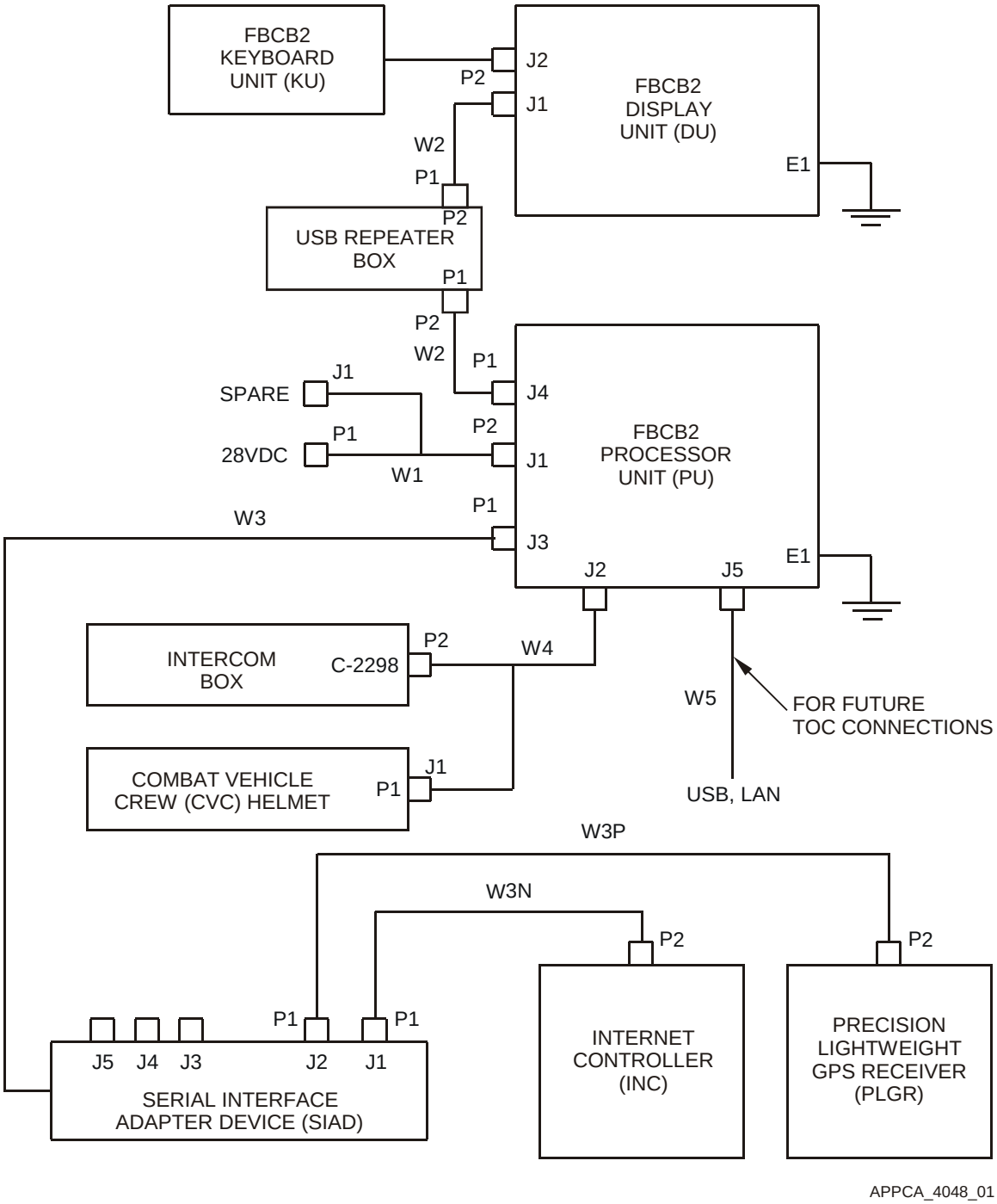

Figure U-1. Equipment Interface Block Diagram

U–4 COMPONENT LOCATION

U–4.1 GENERAL LOCATION

Figure U-2 shows the general location of the AN/UYK-128(V) components. Internal equipment location of individual components is shown in detail in Figure U-3 and Figure U-4.

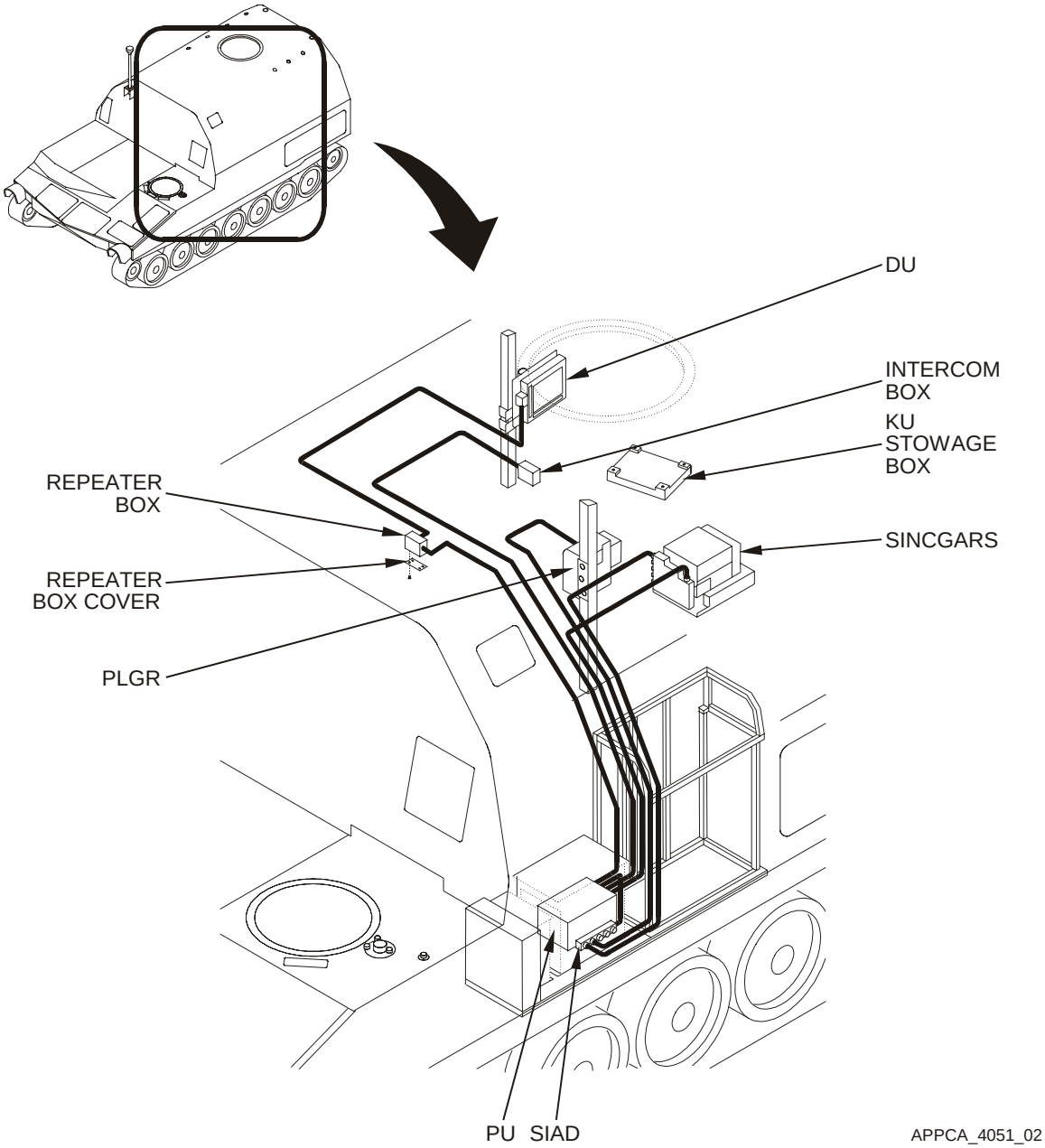

Figure U-2. Relative Component Locations

U–4.2 MOUNTING

U–4.2.1 PU MOUNTING

Figure U-3 shows how the PU is mounted roadside beneath the fuse rack. It is mounted on the PU isolation assembly, which is secured to an aluminum plate (PU mounting bracket) on the equipment shelf.

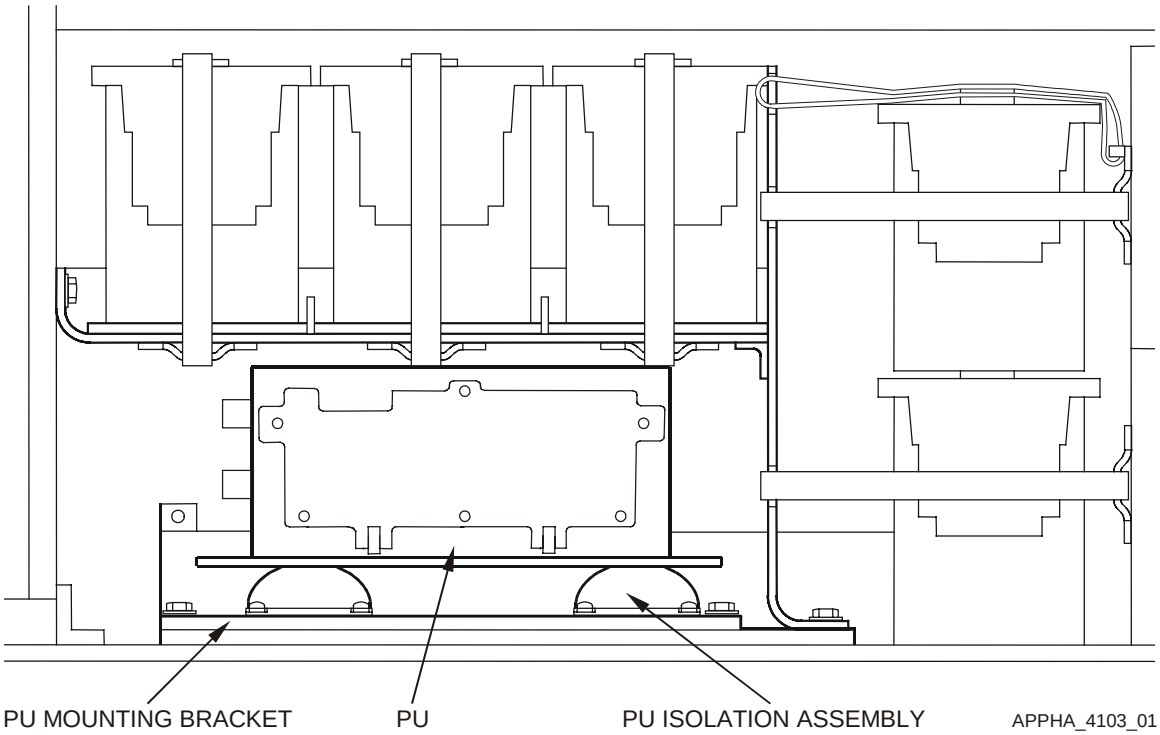

Figure U-3. PU Mounted Beneath Fuse Rack

U–4.2.2 DU MOUNTING

Figure U-4 illustrates how the DU is mounted to the vehicle's curbside forward vertical support. A mount bracket, clamps and a RAM-Ball assembly secure the DU and isolation assembly to the forward post.

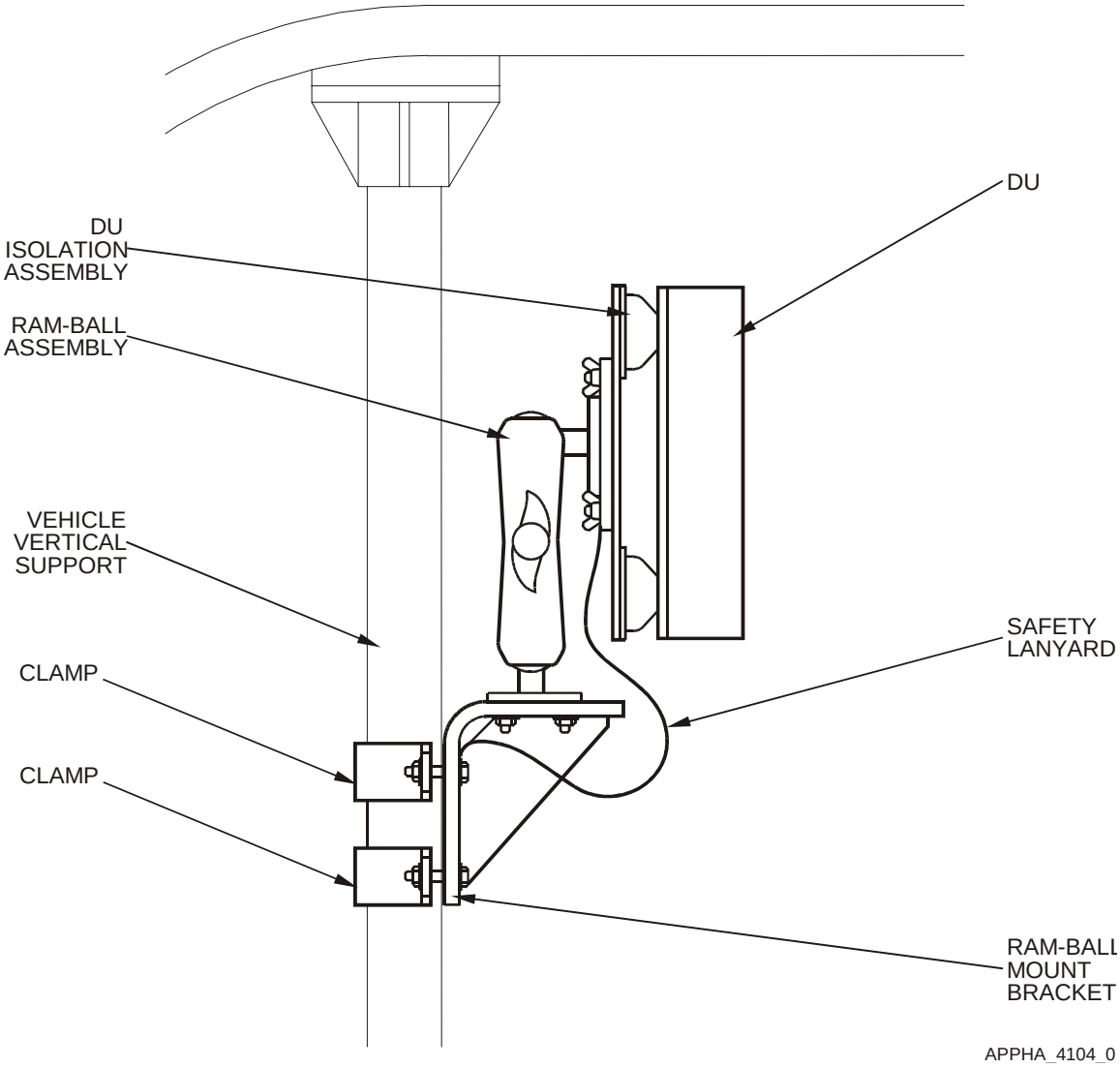

Figure U-4. DU Mounting Side View

U–5 PLATFORM-UNIQUE TROUBLESHOOTING

There are no unique troubleshooting procedures for this vehicle.

U–6 REMOVAL/REPLACEMENT IN THE PLATFORM

Most installations must be tailored to the platform. Cables and brackets are unique to the installation. Before a part or assembly is removed from a vehicle, fill out a “Maintenance Request” DA Form 2407. One copy of this completed form must remain with the vehicle and the remaining copies must be kept with the failed component. To prove the operability of the system after an item is replaced, perform the system Functional Check.

U–6.1 FUNCTIONAL CHECK

U–6.1.1 POWER UP

Power up and initialize all interface equipment and the AN/UYK-128(V) In Accordance With (IAW) the Operator’s Manual TM 11-7010-326-10, or Pocket Guide TB 11-7010-326-10.

U–6.1.2 VERIFICATION

NOTE

Observe that the Display Unit PWR, DISP and CPU green LED lights are lit.

a. Observe that the PLGR synchronizes with PU, indicated by the PLGR dialog box showing green.

b. Observe that the Router synchronizes with the PU, indicated by the Router dialog box showing green.

c. At the Session Manager screen, select OPS button to display the OPS screen.

d. Verify the GPS status is either green or amber on the Classification/Status Bar.

e. Verify the Communications status is either green or amber on the Classification/Status Bar.

U–6.1.3 POWER DOWN

Power down all interface equipment and the AN/UYK-128(V) IAW the Operator’s Manual TM 11-7010-326-10, or Pocket Guide TB 11-7010-326-10.

U–6.2 REMOVE/REPLACE W1 POWER CABLE

Refer to Figure U-5.

U–6.2.1 REMOVE W1 POWER CABLE

WARNING

Before conducting maintenance involving the removal and replacement of system components, ensure that all power to the FBCB2 system is off (including power from the vehicle). Failure to comply with warning may result in equipment damage or injury to personnel.

a. Power down AN/UYK-128(V) system IAW Operator's Manual TM 11-7010-326-10, or Pocket Guide TB 11-7010-326-10.

b. Power down SINCGARS IAW TM 11-5820-890-10-8.

c. Unlatch and slide the SINCGARS Vehicle Amplifier-Adapter (VAA) forward from Mounting Base (MB) to allow access to W1 cable connector IAW TM 11-5820-890-10-8.

d. Disconnect W1-P1 cable connector from the SINCGARS Mounting Base (MB) (MT-6352A/VRC) A4-J2 connector.

e. Disconnect W1-J1 cable connector from power interface cable (if applicable).

f. Disconnect W1-P2 cable connector from PU J1 connector.

g. Install protective cap on PU J1 connector.

NOTE

Note cable routing and tie-wrap locations before removing cable or tie-wraps.

h. Remove tie-wraps securing W1 cable using diagonal wire cutters.

i. Remove W1 cable (5).

U–6.2.2 REPLACE W1 POWER CABLE

a. Route W1 power cable (5).

b. Remove protective cap from PU J1 connector.

c. Connect W1-P2 cable connector to PU J1 connector.

d. Connect W1-J1 cable connector to power interface cable (if applicable).

e. Connect W1-P1 cable connector to SINCGARS Mounting Base (MB) (MT-6352/VRC) A4-J2 connector.

f. Slide SINCGARS VAA back into original position on Mounting Base (MB) and secure IAW TM 11-5820-890-10-8.

g. Secure W1 cable using tie-wraps.

h. Dress tie-wraps using diagonal wire cutters.

i. Perform Functional Check IAW paragraph U–6.1.

U–6.3 REMOVE/REPLACE W2 DISPLAY CABLES

Refer to Figure U-5.

There are two W2 display cables in the M992 FAASV vehicle configuration. One from the PU to the Repeater Box and one from the Repeater Box to the DU.

U–6.3.1 REMOVE W2 DISPLAY CABLE (PU TO REPEATER BOX)

WARNING

Before conducting maintenance involving the removal and replacement of system components, ensure that all power to the FBCB2 system is off (including power from the vehicle). Failure to comply with warning may result in equipment damage or injury to personnel.

a. Power down AN/UYK-128(V) system IAW Operator's Manual TM 11-7010-326-10, or Pocket Guide TB 11-7010-326-10.

b. Disconnect W2-P1 cable connector from PU J4 connector.

c. Install protective cap on PU J4 connector.

d. Disconnect W2-P2 cable connector from Repeater Box P1 connector.

NOTE

Take note of cable routing and tie-wrap locations before removing cable or tie-wraps.

e. Remove tie-wraps from cable using diagonal wire cutters.

f. Remove W2 cable (1).

U–6.3.2 REPLACE W2 DISPLAY CABLE (PU TO REPEATER BOX)

a. Route W2 (1) cable between PU and Repeater Box.

b. Connect W2-P2 cable connector to Repeater Box P1 connector.

c. Remove protective cap from PU J4 connector.

d. Connect W2-P1 cable connector to PU J4 connector.

e. Secure W2 cable using tie-wraps.

f. Dress tie-wraps using diagonal wire cutters.

g. Perform Functional Check IAW paragraph U–6.1.

U–6.3.3 REMOVE W2 DISPLAY CABLE (REPEATER BOX TO DU)

WARNING

Before conducting maintenance involving the removal and replacement of system components, ensure that all power to the FBCB2 system is off (including power from the vehicle). Failure to comply with warning may result in equipment damage or injury to personnel.

a. Power down AN/UYK-128(V) system IAW Operator's Manual TM 11-7010-326-10, or Pocket Guide TB 11-7010-326-10.

b. Disconnect W2-P1 cable connector from Repeater Box P2 connector.

c. Disconnect W2-P2 cable connector from display J1 connector.

d. Install protective cap on display J1 connector.

NOTE

Note cable routing and tie-wrap locations before removing cable or tie-wraps.

e. Remove tie-wraps from cable and ground strap using diagonal wire cutters.

f. Remove W2 cable (1).

U–6.3.4 REPLACE W2 DISPLAY CABLE (REPEATER BOX TO DU)

a. Route W2 (1) cable between Repeater Box and DU.

b. Remove protective cap from display J1 connector.

c. Connect W2-P2 cable connector to display J1 connector.

d. Connect W2-P1 cable connector to Repeater Box P2 connector.

e. Dress tie-wraps using diagonal wire cutters.

f. Perform Functional Check IAW paragraph U–6.1.

U–6.4 REMOVE/REPLACE USB REPEATER BOX

Refer to Figure U-5.

U–6.4.1 REMOVE USB REPEATER BOX

WARNING

Before conducting maintenance involving the removal and replacement of system components, ensure that all power to the FBCB2 system is off (including power from the vehicle). Failure to comply with warning may result in equipment damage or injury to personnel.

a. Power down AN/UYK-128(V) system IAW Operator's Manual TM 11-7010-326-10, or Pocket Guide TB 11-7010-326-10.

b. Disconnect W2-P2 cable connector from Repeater Box P1 connector (PU to Repeater Box W2 cable).

c. Disconnect W2-P1 cable connector from Repeater Box P2 connector (Repeater Box to DU W2 cable).

d. Remove four screws (7) from Repeater Box cover using flat-tip screwdriver.

e. Remove Repeater Box cover.

f. Remove two mounting screws (8) securing Repeater Box to standoffs using flat-tip screwdriver.

g. Remove Repeater Box.

h. Install Repeater Box cover with four screws (7) using flat tip screwdriver.

U–6.4.2 REPLACE USB REPEATER BOX

a. Remove four screws (7) from Repeater Box cover using flat tip screwdriver.

b. Remove Repeater Box cover.

c. Align Repeater Box mounting holes with standoffs.

d. Install and tighten two mounting screws (8) using flat tip screwdriver.

e. Align Repeater Box cover with screw holes.

f. Install and tighten four cover screws (7) using flat tip screwdriver.

g. Connect W2-P2 cable connector to Repeater Box P1 connector (PU to Repeater Box W2 cable).

h. Connect W2-P1 cable connector from Repeater Box P2 connector (Repeater Box to DU W2 cable).

i. Perform Functional Check IAW paragraph U–6.1.

U–6.5 REMOVE/REPLACE W3 SERIAL INTERFACE ADAPTER DEVICE (SIAD)

Refer to Figure U-5.

U–6.5.1 REMOVE W3 SERIAL INTERFACE ADAPTER DEVICE (SIAD)

WARNING

Before conducting maintenance involving the removal and replacement of system components, ensure that all power to the FBCB2 system is off (including power from the vehicle). Failure to comply with warning may result in equipment damage or injury to personnel.

a. Power down AN/UYK-128(V) system IAW Operator's Manual TM 11-7010-326-10, or Pocket Guide TB 11-7010-326-10.

b. Disconnect W3N-P1 cable connector from W3 SIAD J1 connector.

c. Disconnect W3P-P1 cable connector from W3 SIAD J2 connector.

d. Disconnect W3 SIAD-P1 cable connector from PU J3 connector.

e. Install protective cap on PU J3 connector.

NOTE

Note cable routing and tie-wrap locations before removing cable or tie-wraps.

f. Remove tie-wraps securing W3 SIAD using diagonal wire cutters.

g. Remove W3 SIAD (6).

U–6.5.2 REPLACE W3 SERIAL INTERFACE ADAPTER DEVICE (SIAD)

a. Route W3 SIAD (6) into original position.

b. Remove protective cap from PU J3 connector.

c. Connect W3 SIAD-P1 cable connector to PU J3 connector.

d. Connect W3P-P1 cable connector to W3 SIAD J2 connector.

e. Connect W3N-P1 cable connector to W3 SIAD J1 connector.

f. Secure W3 SIAD using tie-wraps.

g. Dress tie-wraps using diagonal wire cutters.

h. Perform Functional Check IAW paragraph U–6.1.

U–6.6 REMOVE/REPLACE W3P PLGR CABLE

Refer to Figure U-5.

U–6.6.1 REMOVE W3P PLGR CABLE

WARNING

Before conducting maintenance involving the removal or replacement of system components, ensure that all power to the FBCB2 system is off (including power from the vehicle). Failure to comply with warning may result in equipment damage or injury to personnel.

a. Power down AN/UYK-128(V) system IAW Operator's Manual TM 11-7010-326-10, or Pocket Guide TB 11-7010-326-10.

b. Disconnect W3P-P1 cable connector from W3 SIAD J2 connector.

c. Remove PLGR from mount.

d. Disconnect W3P-P2 cable connector from PLGR J2 connector using an offset flat screwdriver.

NOTE

Note cable routing and tie-wrap locations before removing cable or tie-wraps.

e. Remove tie-wraps securing W3P cable using diagonal wire cutters.

f. Remove W3P cable (4).

U–6.6.2 REPLACE W3P PLGR CABLE

a. Route W3P cable (4).

b. Connect W3P-P2 cable connector to PLGR J2 connector using an offset flat screwdriver.

c. Install PLGR in mount.

d. Connect W3P-P1 cable connector to W3 SIAD J2 connector.

e. Secure W3P cable using tie-wraps.

f. Dress tie-wraps using diagonal wire cutters.

g. Perform Functional Check IAW paragraph U–6.1.

U–6.7 REMOVE/REPLACE W3N INC CABLE

Refer to Figure U-5.

U–6.7.1 REMOVE W3N INC CABLE

WARNING

Before conducting maintenance involving the removal and replacement of system components, ensure that all power to the FBCB2 system is off (including power from the vehicle). Failure to comply with warning may result in equipment damage or injury to personnel.

a. Power down AN/UYK-128(V) system IAW Operator's Manual TM 11-7010-326-10, or Pocket Guide TB 11-7010-326-10.

b. Disconnect W3N-P1 cable connector from W3 SIAD J1 connector.

c. Disconnect W3N-P2 cable connector from SINCGARS INC J6 connector.

NOTE

Note cable routing and tie-wrap locations before removing cable or tie-wraps.

d. Remove tie-wraps securing W3N cable using diagonal cutters.

e. Remove W3N cable (3).

U–6.7.2 REPLACE W3N INC CABLE

a. Route W3N cable (3).

b. Connect W3N-P2 cable connector to SINCGARS INC J6 connector.

c. Connect W3N-P1 cable connector to W3 SIAD J1 connector.

d. Secure W3N cable using tie-wraps.

e. Dress tie-wraps using diagonal wire cutters.

f. Perform Functional Check IAW paragraph U–6.1.

U–6.8 REMOVE/REPLACE W4 AUDIO CABLE

Refer to Figure U-5.

U–6.8.1 REMOVE W4 AUDIO CABLE

WARNING

Before conducting maintenance involving the removal and replacement of system components, ensure that all power to the FBCB2 system is off (including power from the vehicle). Failure to comply with warning may result in equipment damage or injury to personnel.

a. Power down AN/UYK-128(V) system IAW Operator's Manual TM 11-7010-326-10, or Pocket Guide TB 11-7010-326-10.

b. Disconnect W4-P1 cable connector from PU J2 connector.

c. Install protective cap on PU J2 connector.

d. Disconnect W4-P2 cable connector from Intercom Box C-2298 connector.

e. Disconnect W4-J1 cable connector from Combat Vehicle Crew (CVC) helmet P1 connector.

NOTE

Note cable routing and tie-wrap locations before removing cable or tie-wraps.

f. Remove tie-wraps securing W4 cable using diagonal wire cutters.

g. Remove W4 cable (2).

U–6.8.2 REPLACE W4 AUDIO CABLE

a. Route W4 cable (2).

b. Connect W4-J1 cable connector to CVC helmet P1 connector.

c. Connect W4-P2 cable connector to the Intercom Box C-2298 connector.

d. Remove protective cap from PU J2 connector.

e. Connect W4-P1 cable connector to PU J2 connector.

f. Secure W4 cable using tie-wraps.

g. Dress tie-wraps using diagonal wire cutters.

h. Perform Functional Check IAW paragraph U–6.1.

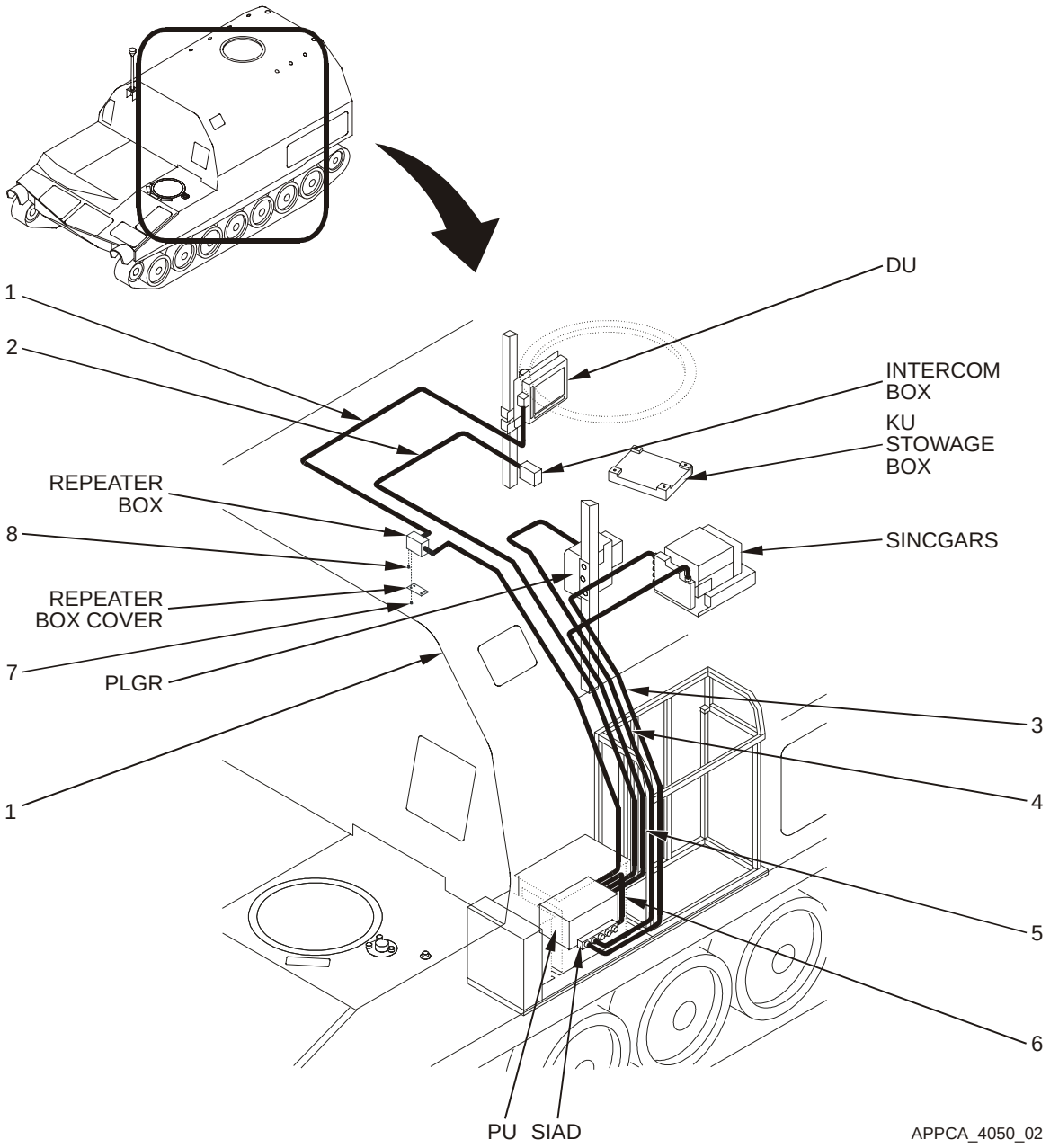

Figure U-5. Cable Run

Key and Part List for Figure U-5

ITEM NO.	NOMENCLATURE	CAGE CODE	PART NUMBER	NSN	QTY	SMR
1	Cable Assembly W2	0J198	881327-3	5995-01-478-4877	2	PAODD
2	Cable Assembly W4	0J198	881270-1	5995-01-478-4924	1	PAODD
3	Cable Assembly W3N	0J198	881336-4	5995-01-478-4926	1	PAODD
4	Cable Assembly W3P	0J198	881335-4	5995-01-478-4906	1	PAODD
5	Cable Assembly W1	0J198	866003-2	5995-01-478-4903	1	PAODD
6	SIAD W3	0J198	881331-1	5995-01-478-3722	1	PAODD
--	(Repeater Box) Coupler, Digital Data	0J198	881314-1	5995-01-478-3727	1	PAOZZ
7	Screw (Cover screw)				4	
8	Screw, Machine	96906	MS35206-230		2	PAOZZ
--	Standoff	66530	CB3001AA06-8		2	PAOZZ
--	Washer, Lock	96906	MS35338-41		2	PAOZZ
--	Strap, Tie down, Elect	39428	7130K31			PAOZZ

U–6.9 REMOVE/REPLACE PU ISOLATION ASSEMBLY

Refer to Figure U-6.

NOTE

Ground straps are attached to components at one end (PU and DU) and a frame ground at the other end. Regardless of where the ground strap terminates, it is usually a burnished (void of paint) area. If the ground strap is removed from a burnished area, make sure to return it to the same burnished area. Where applicable, always connect the ground strap first when assembling, and disconnect the ground strap last when disassembling.

U–6.9.1 REMOVE PU ISOLATION ASSEMBLY

WARNING

Before conducting maintenance involving the removal and replacement of system components, ensure that all power to the FBCB2 system is off (including power from the vehicle). Failure to comply with warning may result in equipment damage or injury to personnel.

a. Power down AN/UYK-128(V) system IAW Operator's Manual TM 11-7010-326-10, or Pocket Guide TB 11-7010-326-10.

NOTE

Do not remove the Removable Hard Disk Drive Cartridge (RHDDC) or locking bracket from PU.

b. Remove PU IAW Unit Maintenance Manual TM 11-7010-326-20&P, Chapter 2.

c. Remove one hex screw (1), lock washer (2), flat washer (3) and ground strap from PU isolation assembly bottom plate using a 7/16" socket with ratchet and 3" extension.

d. Remove remaining three hex screws (1), lock washers (2) and flat washers (3) from PU isolation assembly bottom plate using a 7/16" socket with ratchet and 3" extension.

e. Remove PU isolation assembly.

U–6.9.2 REPLACE PU ISOLATION ASSEMBLY

a. Align four PU isolation assembly bottom plate holes with inserts in mounting bracket.

NOTE

To ensure positive ground, PU ground strap must make direct contact with bare metal. Ensure PU ground strap is installed in its original location at the PU isolation assembly bottom plate mounting hole. Slip the lock washer, flat washer and then the ground strap on the mounting screw before installing and tightening screw.

b. Install one hex head screw (1), lock washer (2), flat washer (3) and ground strap on PU isolation assembly bottom plate using a 7/16” socket with ratchet and 3” extension.

c. Install remaining three hex head screws (1), lock washers (2) and flat washers (3) on PU isolation assembly bottom plate using a 7/16” socket with ratchet and 3” extension.

d. Install PU IAW Unit Maintenance Manual TM 11-7010-326-20&P, Chapter 2.

e. Perform Functional Check IAW paragraph U–6.1.

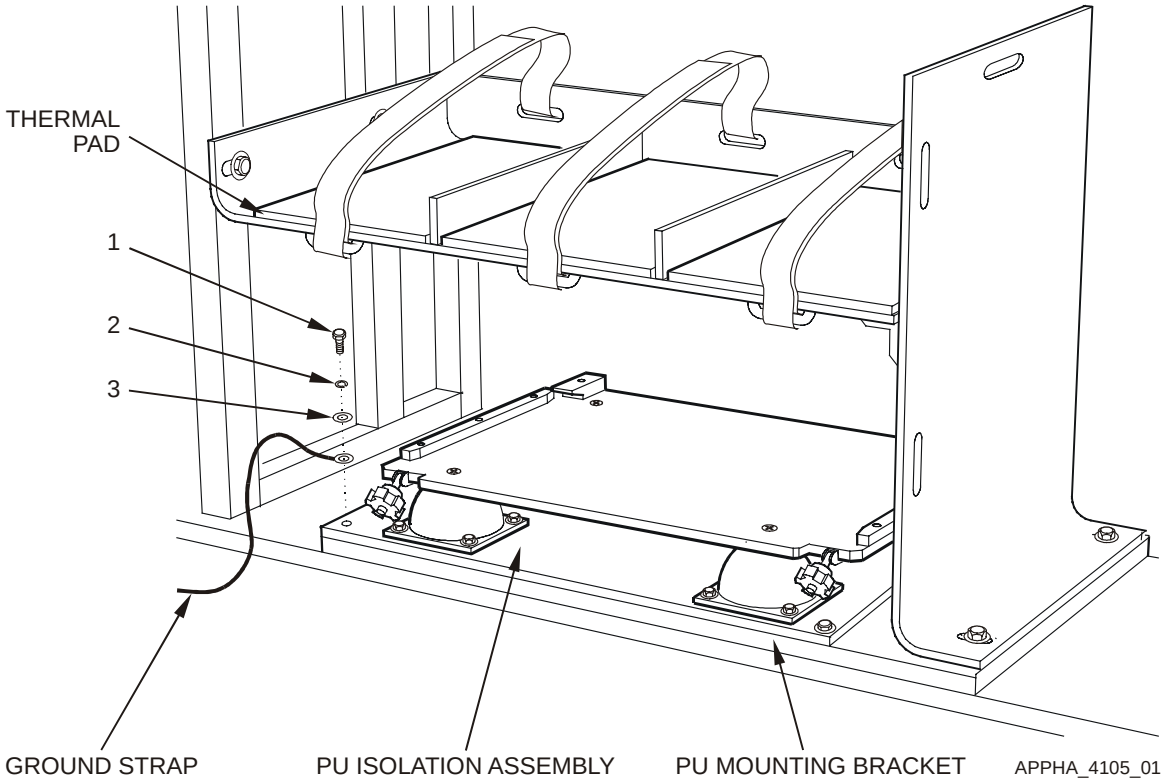

Figure U-6. Remove and Replace PU Isolation Assembly

Key and Parts List for Figure U-6

ITEM NO.	NOMENCLATURE	CAGE CODE	PART NUMBER	NSN	QTY	SMR
1	Screw, Cap, Hexagon	80204	B1821AH025C063N	5305-01-457-8854	4	PAOZZ
2	Washer, Lock	96906	MS35338-44	5310-00-582-5965	4	PAOZZ
3	Washer, Flat	96906	MS27183-10	5310-00-809-4058	4	PAOZZ
--	Strap, Webbing 4'	19207	8690473	5340-00-753-3744		PAOZZ
--	Strap, Webbing 5'	19207	8690479	2540-00-715-3854		PAOZZ
--	Thermal Pad	0J198	872863-1			PAOZZ
--	Bracket, Mounting, PU	80212	4250272			PAOZZ
--	Screw, Cap, Hexagon	80204	B1821AH025C088N	5305-01-389-8787	4	PAOZZ
--	Washer, Flat	96906	MS27183-10	5310-00-809-4058	8	PAOZZ
--	Washer, Lock	96906	MS35338-44	5310-00-582-5965	6	PAOZZ
--	Nut, Plain, Hexagon	10110	MS51967-2	5310-01-291-3389	2	PAOZZ
--	Loop, Strap Fastener	19207	10875599	5340-00-901-8124		PAOZZ

U–6.10 REMOVE/REPLACE DU ISOLATION ASSEMBLY

Refer to Figure U-7.

NOTE

Ground straps are attached to components at one end (PU and DU) and a frame ground at the other end. Regardless of where the ground strap terminates, it is usually a burnished (void of paint) area. If the ground strap is removed from a burnished area, make sure to return it to the same burnished area. Where applicable, always connect the ground strap first when assembling, and disconnect the ground strap last when disassembling.

U–6.10.1 REMOVE DU ISOLATION ASSEMBLY

WARNING

Before conducting maintenance involving the removal and replacement of system components, ensure that all power to the FBCB2 system is off (including power from the vehicle). Failure to comply with warning may result in equipment damage or injury to personnel.

a. Power down AN/UYK-128(V) system IAW Operator's Manual TM 11-7010-326-10, or Pocket Guide TB 11-7010-326-10.

b. Remove DU IAW Unit Maintenance Manual TM 11-7010-326-20&P, Chapter 2.

NOTE

Note cable routing and tie-wrap locations before removing cable or tie-wraps.

c. Remove tie-wraps securing W2 cable and ground strap to DU isolation assembly using diagonal wire cutters.

d. Remove one self-locking wing nut (1), safety lanyard, spacer (2) and square neck bolt (4) from RAM-Ball display base with ball and DU isolation assembly (3) bottom plate.

CAUTION

Ensure support is provided to display while loosening RAM-Ball knob. Failure to comply could result in display falling from RAM-Ball mount causing equipment damage.

e. Loosen RAM-Ball knob while supporting DU isolation assembly (3) until RAM-Ball display base with ball can be lifted free of RAM-Ball socket arm.

f. Remove remaining three self-locking wing nuts (1), spacers (2) and square neck bolts (4) from RAM-Ball display base with ball and DU isolation assembly (3) bottom plate.

g. Remove DU isolation assembly (3).

U–6.10.2 REPLACE DU ISOLATION ASSEMBLY

a. Align four RAM-Ball display base with ball installation holes with slots in the DU isolation assembly (1) bottom plate.

b. Install three square neck bolts (4), spacers (2) and self-locking wing nuts (1) on RAM-Ball display base with ball and DU isolation assembly (3) bottom plate.

CAUTION

Ensure RAM-Ball is free of dirt and contaminants before reassembling. Failure to comply can result in slippage or excess wear of RAM-Ball assembly.

c. Inspect and clean RAM-Ball socket arm and display base with ball, as necessary, using clean lint-free wipes.

d. Insert RAM-Ball display base with ball into RAM-Ball socket arm while supporting DU isolation assembly (3).

e. Adjust viewing angle and tighten RAM-Ball knob.

f. Install remaining square neck bolt (4), spacer (2), safety lanyard and self-locking wing nut (1).

g. Secure W2 display cable and ground strap to DU isolation assembly (3) bottom plate using tie-wraps.

h. Dress tie-wraps using diagonal wire cutters.

i. Install DU IAW Unit Maintenance Manual TM 11-7010-326-20&P, Chapter 2.

j. Perform Functional Check IAW paragraph U–6.1.

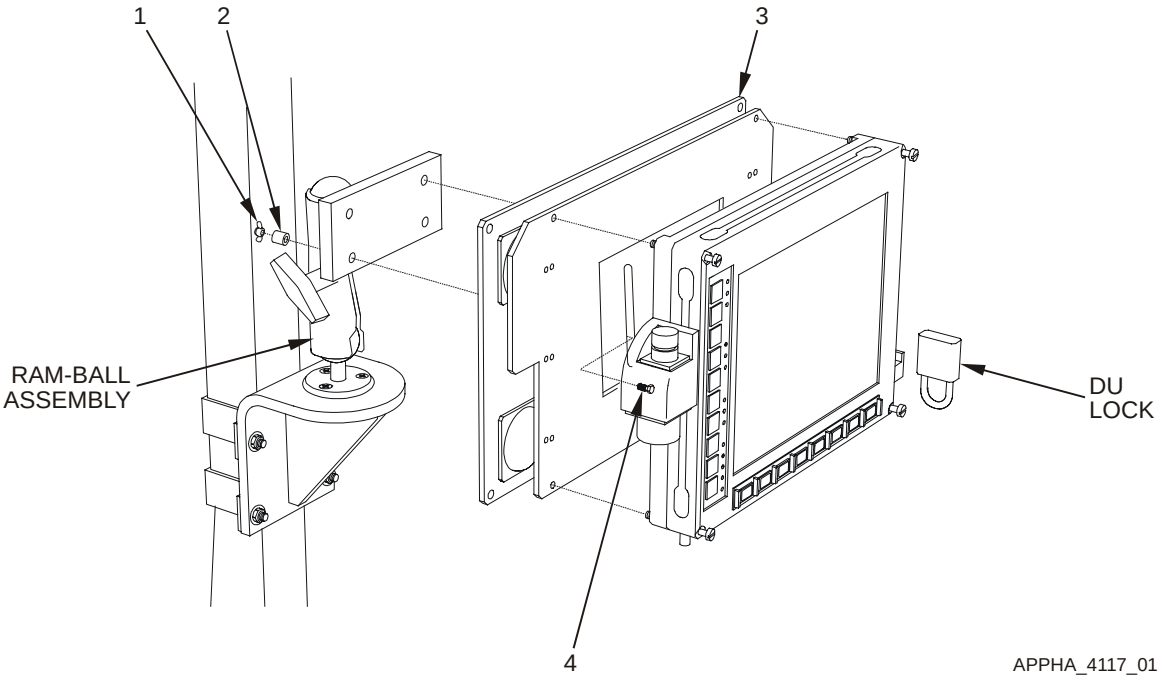

Figure U-7. Remove and Replace DU Isolation Assembly

Key and Parts List for Figure U-7

ITEM NO.	NOMENCLATURE	CAGE CODE	PART NUMBER	NSN	QTY	SMR
1	Nut, Self-Locking, Wing	96906	MS51553-420	5310-01-384-2546	4	PAOZZ
2	Spacer, Aluminum	57177	10705AL315C		4	PAOZZ
3	(DU isolation assembly) Plate, Resilient Mount, DU	0J198	872870-1			PAODD
4	Bolt, Square Neck	96906	MS35751-17	5306-00-889-2943	4	PAOZZ
--	Display Locking Prov	0J198	872843-1		1	XBOOO
--	(RAM-Ball assembly) Mount, RAM-Ball 2.25"	0J198	889489-1		1	PAOZZ

U–6.11 REMOVE/REPLACE RAM-BALL ASSEMBLY

Refer to Figure U-8.

NOTE

Ground straps are attached to components at one end (PU and DU) and a frame ground at the other end. Regardless of where the ground strap terminates, it is usually a burnished (void of paint) area. If the ground strap is removed from a burnished area, make sure to return it to the same burnished area. Where applicable, always connect the ground strap first when assembling, and disconnect the ground strap last when disassembling.

U–6.11.1 REMOVE RAM-BALL ASSEMBLY

WARNING

Before conducting maintenance involving the removal and replacement of system components, ensure that all power to the FBCB2 system is off (including power from the vehicle). Failure to comply with warning may result in equipment damage or injury to personnel.

a. Power down AN/UYK-128(V) system IAW Operator's Manual TM 11-7010-326-10, or Pocket Guide TB 11-7010-326-10.

b. Remove DU IAW Unit Maintenance Manual TM 11-7010-326-20&P, Chapter 2.

NOTE

Note cable routing and tie-wrap locations before removing cable or tie-wraps.

c. Remove tie-wraps securing W2 display cable and ground strap to DU isolation assembly using diagonal wire cutters.

d. Remove one self-locking wing nut (10), safety lanyard, spacer (11) and square neck bolt (12) from RAM-Ball display base.

CAUTION

Ensure support is provided to display while loosening RAM-Ball knob. Failure to comply could result in display falling from RAM-Ball mount causing equipment damage.

e. Loosen RAM-Ball knob while supporting DU isolation assembly until RAM-Ball display base with ball can be lifted free of RAM-Ball socket arm.

f. Remove remaining three self-locking wing nuts (10), spacers (11) and square neck bolts (12) from RAM-Ball display base with ball and DU isolation assembly bottom plate.

g. Remove RAM-Ball display base with ball from DU isolation assembly.

h. Remove RAM-Ball socket arm from RAM-Ball mounting base with ball on RAM-Ball Mounting Bracket (8).

U–6.10.1 REMOVE RAM-BALL ASSEMBLY (Continued)

i. Remove three machine screws (9), flat washers (7), lock washers (6) and hex nuts (5) from RAM-Ball mounting base with ball and RAM-Ball Mounting Bracket (8) using a No. 3 cross-tip screwdriver and a 3/8” socket with ratchet.

j. Remove RAM-Ball display mounting base with ball from RAM-Ball Mounting Bracket (8).

U–6.11.2 REPLACE RAM-BALL ASSEMBLY

a. Align three holes in RAM-Ball mounting base with ball with Ram-Ball Mounting Bracket (8) installation holes.

b. Install three machine screws (9), flat washers (7), lock washers (6) and hex nuts (5) using a No. 3 cross-tip screwdriver and a 3/8" socket with ratchet.

CAUTION

Ensure RAM-Ball is free of dirt and contaminants before reassembling. Failure to comply can result in slippage or excess wear of RAM-Ball assembly.

c. Inspect and clean RAM-Ball socket arm, display and mounting base with ball, as necessary, using clean lint-free wipes.

d. Install RAM-Ball socket arm on RAM-Ball mounting base with ball on RAM-Ball Mounting Bracket (8).

e. Align four RAM-Ball display base with ball installation holes with slots in DU isolation assembly bottom plate.

f. Install three square neck bolts (12), spacers (11) and self-locking wing nuts (10) on RAM-Ball display base with ball and DU isolation assembly bottom plate.

g. Insert RAM-Ball display base with ball into RAM-Ball socket arm while supporting DU isolation assembly.

h. Adjust viewing angle and tighten RAM-Ball knob.

i. Install remaining square neck bolt (12), spacer (11), safety lanyard and self-locking wing nut (10) on RAM-Ball display base with ball and DU isolation assembly bottom plate.

j. Install DU IAW Unit Maintenance Manual TM 11-7010-326-20&P, Chapter 2.

k. Secure W2 display cable and ground strap to display isolation assembly using tie-wraps.

l. Dress tie-wraps using diagonal wire cutters.

m. Perform Functional Check IAW paragraph U–6.1.

U–6.12 REMOVE/REPLACE RAM-BALL BRACKET

Refer to Figure U-8.

U–6.12.1 REMOVE RAM-BALL BRACKET

WARNING

Before conducting maintenance involving the removal and replacement of system components, ensure that all power to the FBCB2 system is off (including power from the vehicle). Failure to comply with warning may result in equipment damage or injury to personnel.

a. Power down AN/UYK-128(V) system IAW Operator's Manual TM 11-7010-326-10, or Pocket Guide TB 11-7010-326-10.

b. Remove DU IAW Unit Maintenance Manual TM 11-7010-326-20&P, Chapter 2.

NOTE

Note cable routing and tie-wrap locations before removing cable or tie-wraps.

c. Remove tie-wraps securing W2 display cable and ground strap to DU isolation assembly using diagonal wire cutters.

d. Remove one self-locking wing nut (10), safety lanyard, spacer (11) and square neck bolt (12) from RAM-Ball display base.

CAUTION

Ensure support is provided to display while loosening RAM-Ball knob. Failure to comply could result in display falling from RAM-Ball mount causing equipment damage.

e. Loosen RAM-Ball knob while supporting DU isolation assembly until RAM-Ball display base with ball can be lifted free of RAM-Ball socket arm.

f. Remove RAM-Ball socket arm from RAM-Ball mounting base with ball on RAM-Ball Mounting Bracket (8).

g. Remove three machine screws (9), flat washers (7), lock washers (6) and hex nuts (5) from RAM-Ball mounting base with ball and RAM-Ball Mounting Bracket (8) using a No. 3 cross-tip screwdriver and a 3/8" socket with ratchet.

h. Remove RAM-Ball display mounting base with ball from RAM-Ball Mounting Bracket (8).

i. Remove one hex head screw (3), two flat washers (2), safety lanyard and one self-locking nut (4) from RAM-Ball Mounting Bracket (8) and upper forward RAM-Ball mount clamps (1) using a 7/16" socket with ratchet and open-end wrench.

j. Remove remaining three hex head screws (3), six flat washers (2) and three self-locking nuts (4) from RAM-Ball Mounting Bracket (8) and two RAM-Ball mount clamps (1) using a 7/16" socket with ratchet and open-end wrench.

k. Remove RAM-Ball Mounting Bracket (8) and two RAM-Ball mount clamps (1).

U–6.12.2 REPLACE RAM-BALL BRACKET

a. Align two lower RAM-Ball mount clamp (1) holes with lower installation holes in RAM-Ball Mounting Bracket (8).

b. Install two hex head screws (3), four flat washers (2) and two self-locking nuts (4) using a 7/16" socket with ratchet and open-end wrench.

c. Align two upper RAM-Ball mount clamp (1) holes with upper installation holes in RAM-Ball Mounting Bracket (8).

d. Install one hex head screw (3), two flat washers (2), safety lanyard and one self-locking nuts (4) on upper forward RAM-Ball mount clamp using a 7/16" socket with ratchet and open-end wrench.

e. Install remaining hex head screw (3), two flat washers (2) and self-locking nut (4) using a 7/16" socket with ratchet and open-end wrench.

f. Position RAM-Ball Mounting Bracket and RAM-Ball mount clamps at proper height and tighten four screws (3) and nuts (4).

g. Align three holes in RAM-Ball mounting base with ball with installation holes in RAM-Ball Mounting Bracket (8).

h. Install three machine screws (9), flat washers (7), lock washers (6) and hex nuts (5) using a No. 3 cross-tip screwdriver and 3/8" socket with ratchet.

CAUTION

Ensure RAM-Ball is free of dirt and contaminants before reassembling. Failure to comply can result in slippage or excess wear of RAM-Ball assembly.

i. Inspect and clean RAM-Ball socket arm, display and mounting base with ball, as necessary, using clean lint-free wipes.

j. Install RAM-Ball socket arm on RAM-Ball mounting base with ball on RAM-Ball Mounting Bracket (8).

k. Insert RAM-Ball display base with ball onto RAM-Ball socket arm.

l. Adjust viewing angle and tighten RAM-Ball knob.

m. Install square neck bolt (12), spacer (11), safety lanyard and self-locking wing nut (10) on RAM-Ball display base with ball and DU isolation assembly bottom plate.

n. Install DU IAW Unit Maintenance Manual TM 11-7010-326-20&P, Chapter 2.

o. Secure W2 display cable and ground strap to DU assembly using tie-wraps.

p. Dress tie-wraps using diagonal wire cutters.

q. Perform Functional Check IAW paragraph U–6.1.

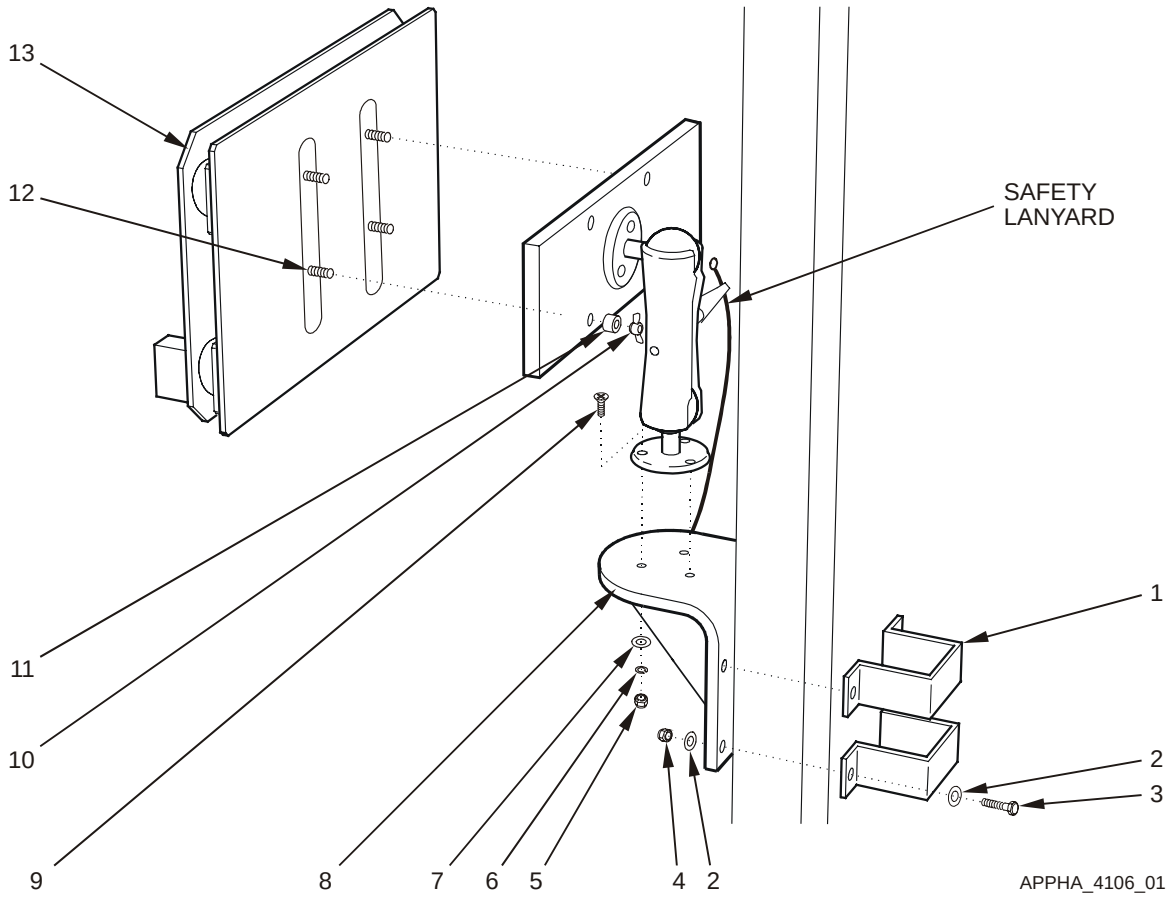

Figure U-8. Remove and Replace Ram-Ball Assembly and RAM-Ball Mounting Bracket

Key and Parts List for Figure U-8

ITEM NO.	NOMENCLATURE	CAGE CODE	PART NUMBER	NSN	QTY	SMR
1	(RAM-Ball mount clamp) Bracket, Mount, Clamp	80212	4250263		2	PAOZZ
2	Washer, Flat	96906	MS27183-10	5310-00-809-4058	8	PAOZZ
3	Screw, Cap, Hexagon	80204	B1821AH025C150N	5305-01-466-7243	4	PAOZZ
4	Nut, Self-Locking	96906	MS51922-1	5310-00-088-1251	4	PAOZZ
5	Nut, Plain, Hexagon	96906	MS35649-2252	5310-00-997-1888	3	PAOZZ
6	Washer, Lock	96906	MS35338-44	5310-00-582-5965	3	PAOZZ
7	Washer, Flat	96906	MS27183-10	5310-00-809-4058	3	PAOZZ
8	(RAM-Ball Mounting Bracket) Bracket, Mount, RAM-Ball	80212	4250264		1	PAOZZ
9	Screw, Machine	96906	MS35190-292	5305-00-990-1347	3	PAOZZ
10	Nut, Self-Locking, Wing	96906	MS51553-420	5310-01-384-2546	4	PAOZZ
11	Spacer, Aluminum	57177	10705AL315C		4	PAOZZ
12	Bolt, Square Neck	96906	MS35751-17	5306-00-889-2943	4	PAOZZ
13	(DU isolation assembly) Plate, Resilient Mount, DU	0J198	872870-1			PAODD
--	(Safety Lanyard) Wire Rope Assembly	39428	30645T11			PAOZZ

U–6.13 REMOVE/REPLACE KEYBOARD UNIT (KU) STOWAGE BOX

Refer to Figure U-9.

U–6.13.1 REMOVE KEYBOARD UNIT (KU) STOWAGE BOX

a. Remove KU from stowage box, if stowed.

b. While supporting KU stowage box, loosen four KU stowage box captive screws (2) until the captive screws move freely using a No. 2 cross-tip screwdriver.

c. Remove KU stowage box from mounting plate.

U–6.13.2 REPLACE KEYBOARD UNIT (KU) STOWAGE BOX

a. Align four KU stowage box captive screws (2) with mounting plate inserts on ceiling.

b. Support stowage box and tighten four captive screws (2) using a No. 2 cross-tip screwdriver.

c. Stow KU, if necessary.

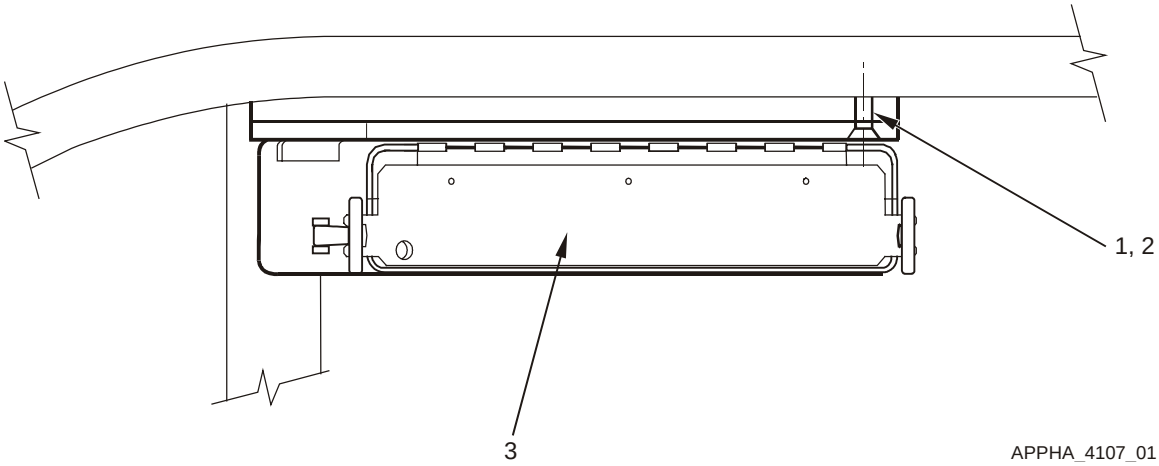

Figure U-9. Remove and Replace Keyboard Unit (KU) Stowage Box

Key and Parts List for Figure U-9

ITEM NO.	NOMENCLATURE	CAGE CODE	PART NUMBER	NSN	QTY	SMR
1	Retainer, Panel Screw	57177	214-03SS10-32		4	PAOZZ
2	Screw, Captive Panel	57177	PH207-05SS1032		4	PAOZZ
3	Box, Stowage, Keyboard	0J198	872845-1	2540-01-481-5744	1	PAODD
	Case, Keyboard	0J198	872845-11		1	XBOOO
	Bottom, Stowage Box	0J198	872845-12		1	XBOOO
	Side rail, KB Box	0J198	872845-13		1	XBOOO
	Side rail, KB Box	0J198	872845-14		1	XBOOO
	Door, Keyboard Box	0J198	872845-15		1	XBOOO
	Hinge, Keyboard Box	0J198	872845-16		1	XBOOO
	Strip, Rubber	0J198	872845-17		1	XBOOO
	Rivet, Solid, CSK	96906	MS20426AD4-5	5320-00-117-6950	6	PAOZZ
	Label, KB Box	0J198	881323-1		1	PAOZZ
	Nut, Plain Hexagon	96906	MS35649-262	5310-00-934-9747	3	PAOZZ

U–6.14 REMOVE/REPLACE KEYBOARD UNIT (KU) STOWAGE BOX DOOR LATCHES

Refer to Figure U-10.

U–6.14.1 REMOVE KEYBOARD UNIT (KU) STOWAGE BOX DOOR LATCHES

a. Remove KU stowage box IAW paragraph U–6.13.1.

b. Pull rubber T-handles and unfasten KU stowage box door latches, if necessary.

c. Remove two pan head screws (1), lock washers (2) and flat washers (3) from each KU stowage box door latch (4) using a No. 2 cross-tip screwdriver.

d. Remove KU stowage box door latch (4).

U–6.14.2 REPLACE KEYBOARD UNIT (KU) STOWAGE BOX DOOR LATCHES

NOTE

The same KU stowage box door latch part is used for each side of the KU stowage box. There is a bumper on one side of the latch that should be positioned toward the side of the KU stowage box when fastened.

a. Align KU stowage box door latch mounting holes with mounting holes in KU stowage box.

b. Install and tighten two pan head screws (1), lock washers (2) and flat washers (3) for each KU stowage box door latch (4), using a No. 2 cross-tip screwdriver.

c. Pull rubber T-handles and fasten KU stowage box door latches.

d. Install KU stowage box IAW paragraph U–6.13.2.

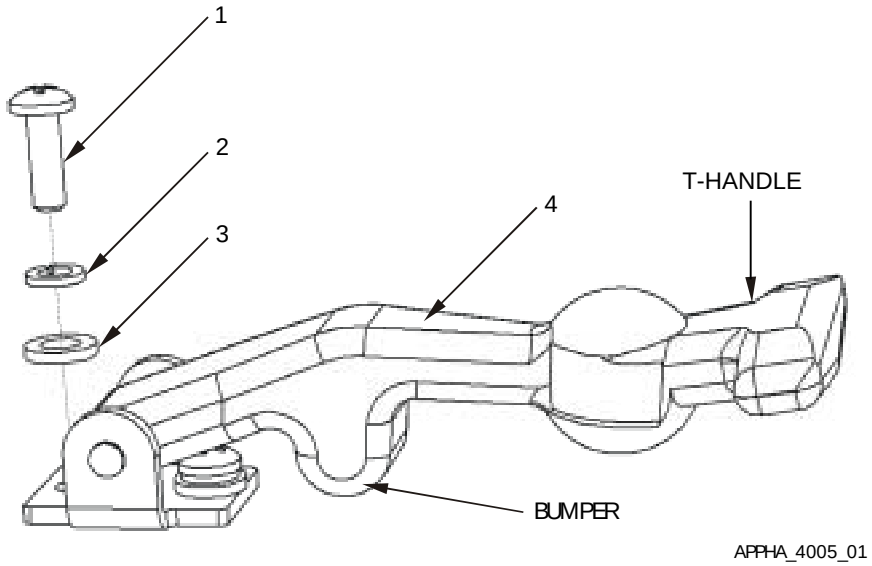

Figure U-10. Remove and Replace Keyboard Unit (KU) Stowage Box Door Latch

Key and Parts List for Figure U-10

ITEM NO.	NOMENCLATURE	CAGE CODE	PART NUMBER	NSN	QTY	SMR
1	Screw, Pan Head	96906	MS35206-229	5305-00-984-4989	4	PAOZZ
2	Washer, Lock	96906	MS35338-41	5310-00-045-4007	4	PAOZZ
3	Washer, Flat	96906	MS27183-5	5310-00-983-8483	4	PAOZZ
4	(KU stowage box door latch) Latch, Thumb	94222	37-20-071-20	5340-01-351-3340	2	PAOZZ

This page intentionally left blank.

APPENDIX V

SUPPLEMENTARY INFORMATION FOR

M1068 BRIGADE

TABLE OF CONTENTS

Page
V–1 GENERAL V–3
V–2 COMPONENT ITEM NUMBERS AND PART NUMBERS V–3
V–3 SYSTEM INTERFACES V–4
V–3.1 MECHANICAL V–4
V–3.2 CABLE INTERFACES V–4
V–4 COMPONENT LOCATION V–6
V–4.1 GENERAL LOCATION V–6
V–4.2 MOUNTING V–7
V–5 PLATFORM-UNIQUE TROUBLESHOOTING V–9
V–6 REMOVAL/REPLACEMENT IN THE PLATFORM V–9
V–6.1 FUNCTIONAL CHECK V–9
V–6.2 REMOVE/REPLACE W1 POWER CABLE V–10
V–6.3 REMOVE/REPLACE W2 DISPLAY CABLE V–11
V–6.4 REMOVE/REPLACE W3 SERIAL INTERFACE ADAPTER DEVICE (SIAD) V–12
V–6.5 REMOVE/REPLACE W3P PLGR CABLE V–13
V–6.6 REMOVE/REPLACE W3N INC CABLE V–14
V–6.7 REMOVE/REPLACE W4 AUDIO CABLE V–15
V–6.8 REMOVE/REPLACE PU ISOLATION ASSEMBLY V–18
V–6.9 REMOVE/REPLACE DU ISOLATION ASSEMBLY V–21
V–6.10 REMOVE/REPLACE RAM-BALL ASSEMBLY V–24
V–6.11 REMOVE/REPLACE KEYBOARD UNIT (KU) STOWAGE BOX V–27
V–6.12 REMOVE/REPLACE KEYBOARD UNIT (KU) STOWAGE BOX DOOR LATCHES V–29

LIST OF ILLUSTRATIONS

Page
Figure V-1. Equipment Interface Block Diagram V–5
Figure V-2. Relative Component Locations V–6
Figure V-3. Equipment Mounting V–7
Figure V-4. Top Down View-Table-Mounted Equipment V–8
Figure V-5. Cable Run V–17
Figure V-6. Remove and Replace PU Isolation Assembly V–19
Figure V-7. Remove and Replace DU Isolation Assembly V–23
Figure V-8. Remove and Replace RAM-Ball Assembly V–26
Figure V-9. Remove and Replace Keyboard Unit (KU) Stowage Box V–27
Figure V-10. Remove and Replace Keyboard Unit (KU) Stowage Box Door Latches V–30

V–1 GENERAL

This appendix describes the interfaces between the FBCB2 equipment and the M1068 BRIGADE. This appendix also identifies the component parts of the M1068 platform installation kit and details the removal and replacement procedures particular to the M1068 BRIGADE.

V–2 COMPONENT ITEM NUMBERS AND PART NUMBERS

Key and Parts List tables contained in the Removal and Replacement section of this Appendix serve a dual purpose. Use the Item Numbers in the Key to identify components and attaching hardware shown in the Figures illustrating the tasks. The nomenclature and part number for the hardware and equipment mounting components of the installation kit also are keyed to the Item Numbers in the tables. Additional parts ordering information, such as Contractor and Government Entity code (CAGE); National Stock Number (NSN); quantity; and Source, Maintenance and Recoverability (SMR) codes, are provided. The Key and Parts List follow the task illustrations.

V–3 SYSTEM INTERFACES

V–3.1 MECHANICAL

The mechanical hardware-to-hardware interfaces include:

a. Cables

b. Processor Unit (PU)

c. Display Unit (DU)

d. Keyboard Unit (KU)

V–3.2 CABLE INTERFACES

Figure V-1 illustrates a block diagram of the interface between FBCB2 and the M1068 BRIGADE (Platform). Figure V-1 also illustrates the signal and control interfaces along with the terminal connector labels (e.g., P1, P2). The purpose of each cable is listed below:

Cable Name	Purpose
W1–Cable	Supplies vehicle power to the AN/UYK-128(V) computer and its subassemblies.
W2–Cable	Supplies power and signals to the Display Unit (DU) and Keyboard Unit (KU). Returns Man Machine Interface (MMI) information from the KU to the Processor Unit (PU).
W3–Cable	The Serial Interface Adapter Device (SIAD) is a conduit assembly that breaks out each of the serial interface ports to a connector.
W3P–Cable	Collects position and time information from the PLGR.
W3N–Cable	Provides duplex communication between the PU, Internet Controller (INC) and radios.
W4MN–Cable	Provides audio alarm signals from FBCB2 PU to the MESHnet in M1068 BRIGADE vehicles equipped with this communications device.
W4–Cable	Connects audio signals from the PU to the Intercom system and Combat Vehicle Crew (CVC) Helmet in some M1068 BRIGADE vehicles.
W5–Cable	The Expansion Interface Adapter Device (EIAD) is connected to the Universal Serial Bus (USB) connector only when this vehicle is to be used in a Tactical Operations Center (TOC) setup. When used in this configuration, the EIAD is connected between the PU J5 connector and local router.
Ground Strap	Provides safety ground for the PU.
Ground Strap	Provides safety ground for the DU.

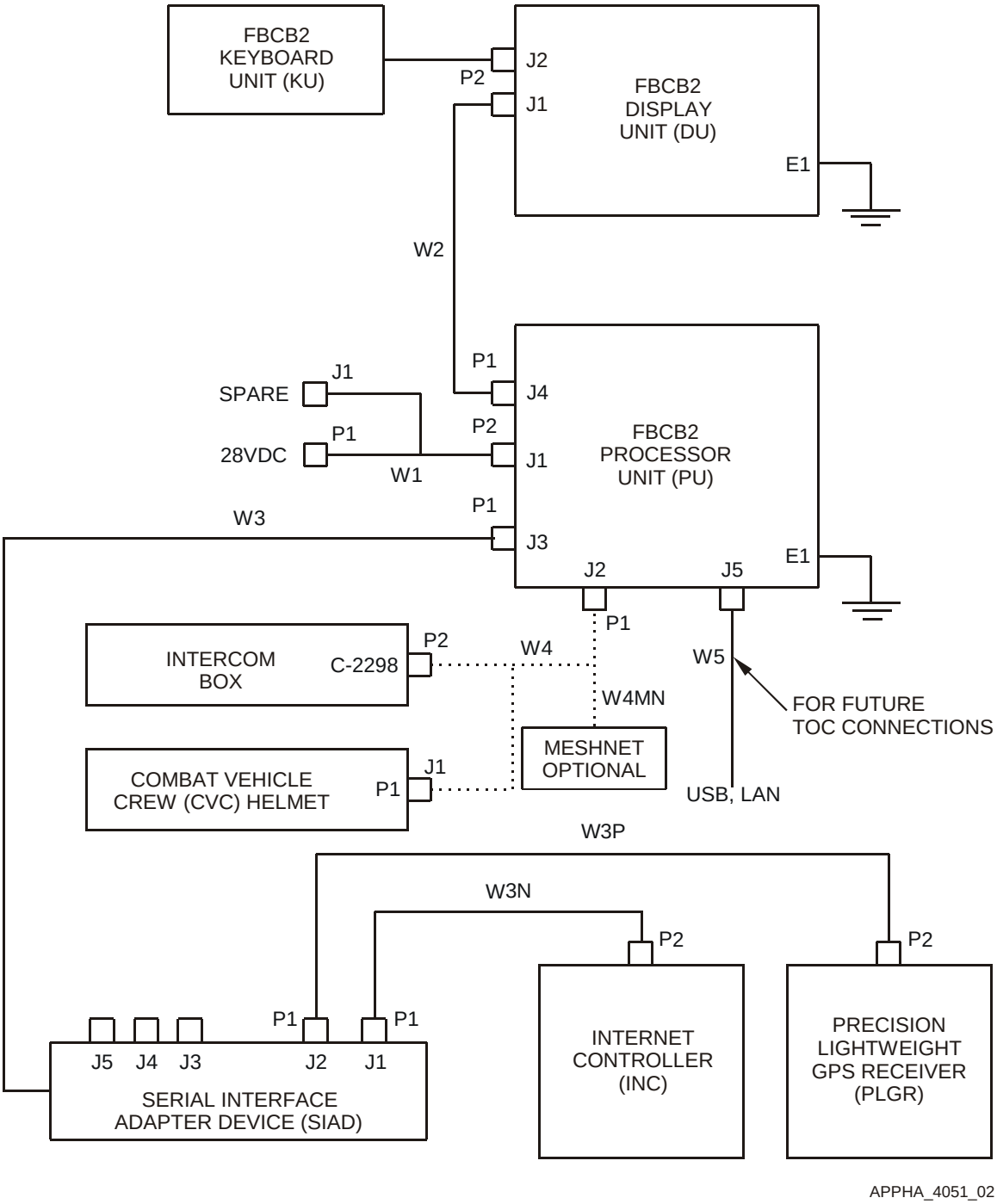

Figure V-1. Equipment Interface Block Diagram

NOTE

M1068 Brigade platforms may be equipped with the MESHnet communications device or with a standard intercom system.

V–4 COMPONENT LOCATION

V–4.1 GENERAL LOCATION

Figure V-2 shows the relative locations of the FBCB2 computer equipment and mounting components in the M1068 BRIGADE configuration. The equipment is mounted roadside on a table and shelf above.

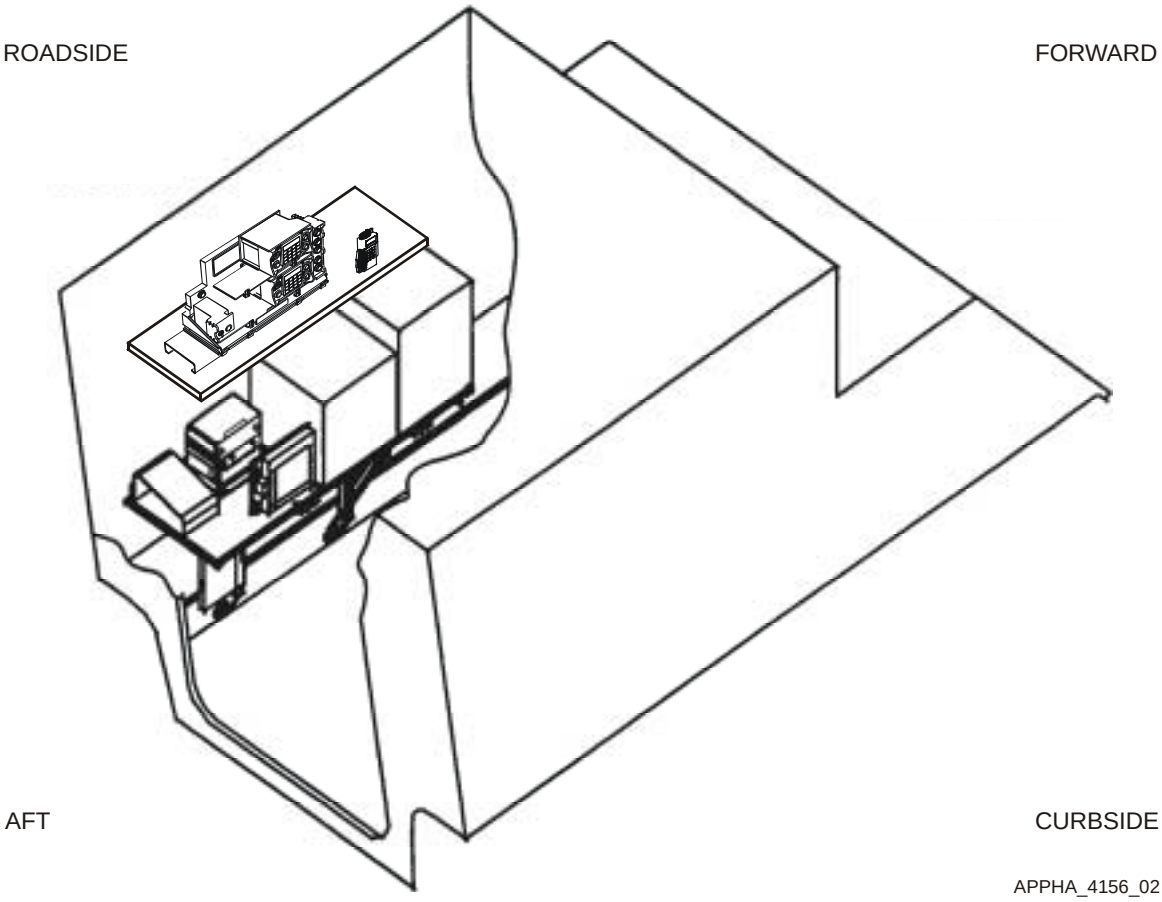

Figure V-2. Relative Component Locations

V–4.2 MOUNTING

Figure V-3 shows the mounting of components on the roadside table and shelf above.

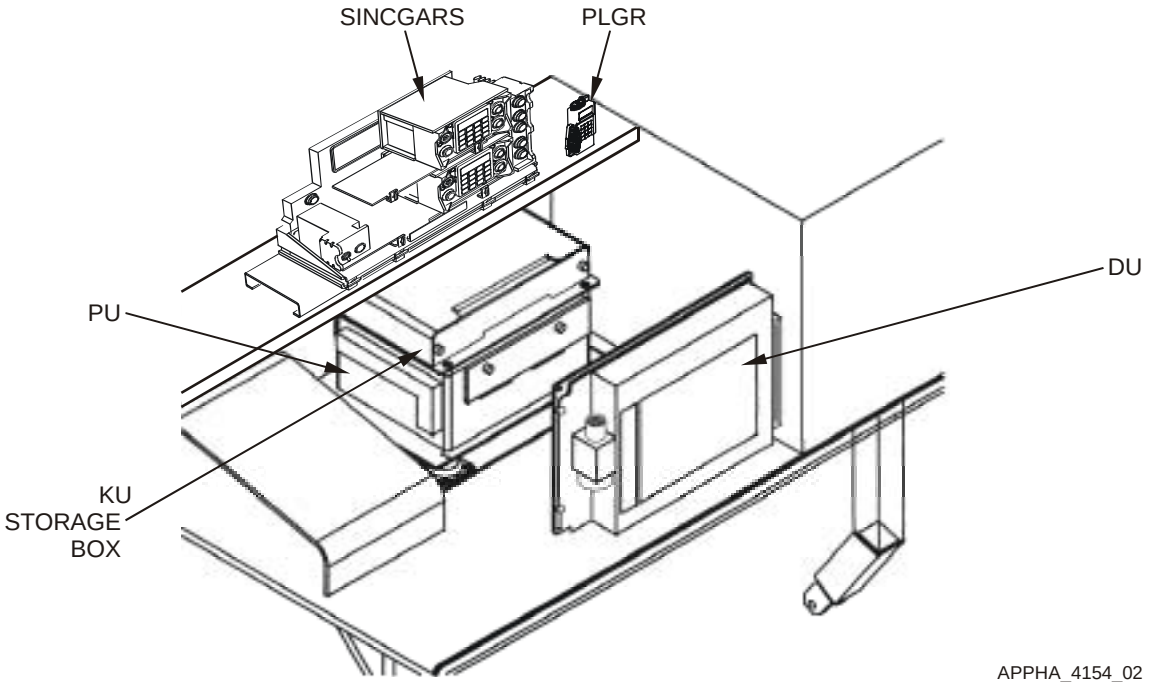

Figure V-3. Equipment Mounting

V–4.2.1 TABLE MOUNTED EQUIPMENT

Figure V-4 illustrates a top down view of the DU, PU and KU stowage box mounted on the roadside table. The KU stowage box is mounted on top of the PU.

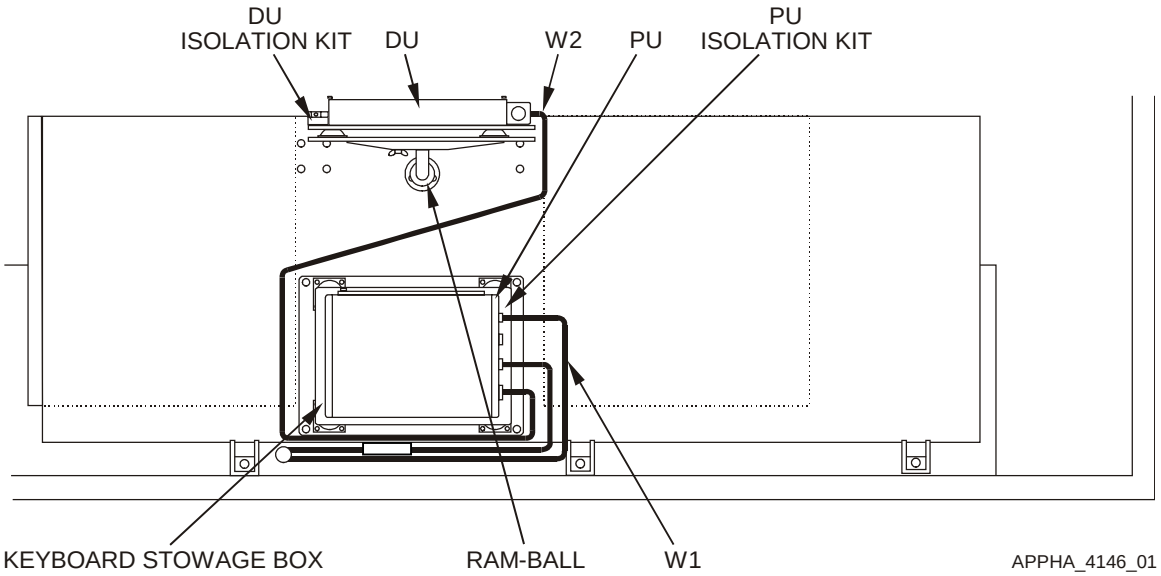

Figure V-4. Top Down View-Table-Mounted Equipment

V–5 PLATFORM-UNIQUE TROUBLESHOOTING

No unique troubleshooting procedures are required for this vehicle.

V–6 REMOVAL/REPLACEMENT IN THE PLATFORM

Most installations must be tailored to the platform. Cables and brackets are unique to the installation. Before a part or assembly is removed from a vehicle, fill out a “Maintenance Request” DA Form 2407. One copy of this completed form must remain with the vehicle and the remaining copies must be kept with the failed component. To prove the operability of the system after an item is replaced, perform the system Functional Check.

V–6.1 FUNCTIONAL CHECK

V–6.1.1 POWER UP

Power up and initialize all interface equipment and the AN/UYK-128(V) In Accordance With (IAW) Operator’s Manual TM 11-7010-326-10, or Pocket Guide TB 11-7010-326-10.

V–6.1.2 VERIFICATION

NOTE

Observe that the Display Unit PWR, DISP and CPU green LED lights are lit.

a. Observe that the PLGR synchronizes with PU, indicated by the PLGR dialog box showing green.

b. Observe that the Router synchronizes with the PU, indicated by the Router dialog box showing green.

c. At the Session Manager screen, select OPS button to display the OPS screen.

d. Verify the GPS status is either green or amber on the Classification/Status Bar.

e. Verify the Communications status is either green or amber on the Classification/Status Bar.

V–6.1.3 POWER DOWN

Power down all interface equipment and the AN/UYK-128(V) IAW the Operator’s Manual TM 11-7010-326-10, or Pocket Guide TB 11-7010-326-10.

V–6.2 REMOVE/REPLACE W1 POWER CABLE

Refer to Figure V-5.

V–6.2.1 REMOVE W1 POWER CABLE

WARNING

Before conducting maintenance involving the removal and replacement of system components, ensure that all power to the FBCB2 system is off (including power from the vehicle). Failure to comply with warning may result in equipment damage or injury to personnel.

a. Power down AN/UYK-128(V) system IAW Operator's Manual TM 11-7010-326-10, or Pocket Guide TB 11-7010-326-10.

b. Power down SINCGARS IAW TM 11-5820-890-10-8.

c. Release and slide SINCGARS Vehicular Amplifier-Adapter (VAA) (AM 7239/VRC) forward from Mounting Base (MB) (MT-6352/VRC) to access W1-P1 cable connector IAW TM 11-5820-890-10-8.

d. Disconnect W1-P1 cable connector from SINCGARS MB A4-J2 connector.

e. Disconnect W1-J1 cable connector from power interface cable (if applicable).

f. Disconnect W1-P2 cable connector from PU J1 connector.

g. Install protective cap on PU J1 connector.

NOTE

Note cable routing and tie-wrap locations before removing cable or tie-wraps.

h. Remove tie-wraps securing W1 cable using diagonal wire cutters.

i. Remove W1 power cable (4).

V–6.2.2 REPLACE W1 POWER CABLE

a. Route W1 power cable (4).

b. Remove protective cap from PU J1 connector.

c. Connect W1-P2 cable connector to PU J1 connector.

d. Connect W1-J1 cable connector to power interface cable (if applicable).

e. Connect W1-P1 cable connector to SINCGARS Mounting Base (MB) (MT-6352A/VRC) A4-J2 connector.

f. Secure W1 cable using tie-wraps, as applicable.

g. Dress tie-wraps using diagonal wire cutters.

h. Slide SINCGARS Vehicular Amplifier-Adapter (VAA) (AM 7239/VRC) back into SINCGARS MB and fasten IAW TM 11-5820-890-10-8.

i. Perform Functional Check IAW paragraph V–6.1.

V–6.3 REMOVE/REPLACE W2 DISPLAY CABLE

Refer to Figure V-5.

V–6.3.1 REMOVE W2 DISPLAY CABLE

WARNING

Before conducting maintenance involving the removal and replacement of system components, ensure that all power to the FBCB2 system is off (including power from the vehicle). Failure to comply with warning may result in equipment damage or injury to personnel.

a. Power down AN/UYK-128(V) system IAW Operator's Manual TM 11-7010-326-10, or Pocket Guide TB 11-7010-326-10.

b. Disconnect W2-P1 cable connector from PU J4 connector.

c. Install protective cap on PU J4 connector.

d. Disconnect W2-P2 cable connector from display J1 connector.

e. Install protective cap on display J1 connector.

NOTE

Note cable routing and tie-wrap locations before removing cable or tie-wraps.

f. Remove tie-wraps from W2 cable and ground strap using diagonal wire cutters.

g. Remove W2 display cable (3).

V–6.3.2 REPLACE W2 DISPLAY CABLE

a. Route W2 display cable (3) between PU and vehicle wall, then between PU and back of DU.

b. Remove protective cap from display J1 connector.

c. Connect W2-P2 cable connector to display J1 connector.

d. Remove protective cap from PU J4 connector.

e. Connect W2-P1 cable connector to PU J4 connector.

f. Secure W2 cable and ground strap using tie-wraps.

g. Dress tie-wraps using diagonal wire cutters.

h. Perform Functional Check IAW paragraph V–6.1.

V–6.4 REMOVE/REPLACE W3 SERIAL INTERFACE ADAPTER DEVICE (SIAD)

Refer to Figure V-5.

V–6.4.1 REMOVE W3 SERIAL INTERFACE ADAPTER DEVICE (SIAD)

WARNING

Before conducting maintenance involving the removal and replacement of system components, ensure that all power to the FBCB2 system is off (including power from the vehicle). Failure to comply with warning may result in equipment damage or injury to personnel.

a. Power down AN/UYK-128(V) system IAW Operator's Manual TM 11-7010-326-10, or Pocket Guide TB 11-7010-326-10.

b. Disconnect W3N-P1 cable connector from W3 SIAD J1 connector.

c. Disconnect W3P-P1 cable connector from W3 SIAD J2 connector.

d. Disconnect W3 SIAD-P1 cable connector from PU J3 connector.

e. Install protective cap on PU J3 connector.

NOTE

Note cable routing and tie-wrap locations before removing cable or tie-wraps.

f. Remove tie-wraps securing W3 SIAD using diagonal wire cutters.

g. Remove W3 SIAD (6).

V–6.4.2 REPLACE W3 SERIAL INTERFACE ADAPTER DEVICE (SIAD)

a. Route W3 SIAD (6).

b. Remove protective cap from PU J3 connector.

c. Connect W3 SIAD-P1 cable connector to PU J3 connector.

d. Connect W3P-P1 cable connector to W3 SIAD J2 connector.

e. Connect W3N-P1 cable connector to W3 SIAD J1 connector.

f. Secure W3 SIAD using tie-wraps.

g. Dress tie-wraps using diagonal wire cutters.

h. Perform Functional Check IAW paragraph V–6.1.

V–6.5 REMOVE/REPLACE W3P PLGR CABLE

Refer to Figure V-5.

V–6.5.1 REMOVE W3P PLGR CABLE

WARNING

Before conducting maintenance involving the removal and replacement of system components, ensure that all power to the FBCB2 system is off (including power from the vehicle). Failure to comply with warning may result in equipment damage or injury to personnel.

a. Power down AN/UYK-128(V) system IAW Operator's Manual TM 11-7010-326-10, or Pocket Guide TB 11-7010-326-10.

b. Disconnect W3P-P1 cable connector from W3 SIAD J2 connector.

c. Unfasten over-center latch and lift PLGR from mounting rack.

d. Disconnect W3P-P2 cable connector from PLGR J2 connector using an offset flat-tip screwdriver.

NOTE

Note cable routing and tie-wrap locations before removing cable or tie-wraps.

e. Remove tie-wraps securing W3P cable using diagonal wire cutters.

f. Remove W3P cable (2).

V–6.5.2 REPLACE W3P PLGR CABLE

a. Route W3P cable (2).

b. Connect W3P-P2 cable connector to PLGR J2 connector using an offset flat-tip screwdriver.

c. Install PLGR into mounting rack and fasten over-center latch.

d. Connect W3P-P1 cable connector to W3 SIAD J2 connector.

e. Secure W3P cable using tie-wraps.

f. Dress tie-wraps using diagonal wire cutters.

g. Perform Functional Check IAW paragraph V–6.1.

V–6.6 REMOVE/REPLACE W3N INC CABLE

Refer to Figure V-5.

V–6.6.1 REMOVE W3N INC CABLE

WARNING

Before conducting maintenance involving the removal and replacement of system components, ensure that all power to the FBCB2 system is off (including power from the vehicle). Failure to comply with warning may result in equipment damage or injury to personnel.

a. Power down AN/UYK-128(V) system IAW Operator's Manual TM 11-7010-326-10, or Pocket Guide TB 11-7010-326-10.

b. Disconnect W3N-P1 cable connector from W3 SIAD J1 connector.

c. Disconnect W3N-P2 cable connector from SINCGARS INC J6 connector.

NOTE

Note cable routing and tie-wrap locations before removing cable or tie-wraps.

d. Remove tie-wraps securing W3N cable using diagonal cutters.

e. Remove W3N cable (1).

V–6.6.2 REPLACE W3N INC CABLE

a. Route W3N cable (1).

b. Connect W3N-P2 cable connector to SINCGARS INC J6 connector.

c. Connect W3N-P1 cable connector to W3 SIAD J1 connector.

d. Secure W3N cable using tie-wraps.

e. Dress tie-wraps using diagonal wire cutters.

f. Perform Functional Check IAW paragraph V–6.1.

V–6.7 REMOVE/REPLACE W4 AUDIO CABLE

Refer to Figure V-5.

V–6.7.1 REMOVE W4 AUDIO CABLE

WARNING

Before conducting maintenance involving the removal and replacement of system components, ensure that all power to the FBCB2 system is off (including power from the vehicle). Failure to comply with warning may result in equipment damage or injury to personnel.

a. Power down AN/UYK-128(V) system IAW Operator's Manual TM 11-7010-326-10, or Pocket Guide TB 11-7010-326-10.

NOTE

If M1068 BRIGADE is equipped with MESHnet (MN) communications device, perform Steps b through e.

b. Disconnect W4MN-P1 cable connector from PU J2 connector.

c. Install protective cap on PU J2 connector.

d. Disconnect W4MN-P2 cable connector from MESHnet H1 connector, if vehicle is equipped with MESHnet communications device.

e. Install protective cap on MESHnet H1 connector.

NOTE

If M1068 BRIGADE is equipped with C-2298 Intercom Set, perform Steps f through i.

f. Disconnect W4-P1 cable connector from PU J2 connector.

g. Install protective cap on PU J2 connector.

h. Disconnect W4-P2 cable connector from Intercom Set C-2298 connector, if vehicle is equipped with intercom box.

i. Disconnect W4-J1 cable connector from Combat Vehicle Crew (CVC) helmet P1 connector if CVC helmet is connected.

NOTE

Note cable routing and tie-wrap locations before removing cable or tie-wraps.

j. Remove tie-wraps securing W4 cable using diagonal wire cutters.

k. Remove W4 audio cable (5).

V–6.7.2 REPLACE W4 AUDIO CABLE

a. Route W4 audio cable (5).

NOTE

If M1068 BRIGADE is equipped with MESHnet (MN) communications device, perform Steps b through e.

b. Remove protective cap from MESHnet H1 connector.

c. Connect W4MN-P2 cable connector to MESHnet H1 connector, if vehicle is equipped with MESHnet communications device.

d. Remove protective cap from PU J2 connector.

e. Connect W4MN-P1 cable connector to PU J2 connector.

NOTE

If M1068 BRIGADE is equipped with C-2298 Intercom Set, perform Steps f through i.

f. Connect W4-J1 cable connector to CVC helmet P1 connector.

g. Connect W4-P2 cable connector to Intercom Set C-2298 connector.

h. Remove protective cap from PU J2 connector.

i. Connect W4-P1 cable connector to PU J2 connector.

j. Secure W4 cable using tie-wraps.

k. Dress tie-wraps using diagonal wire cutters.

l. Perform Functional Check IAW paragraph V–6.1.

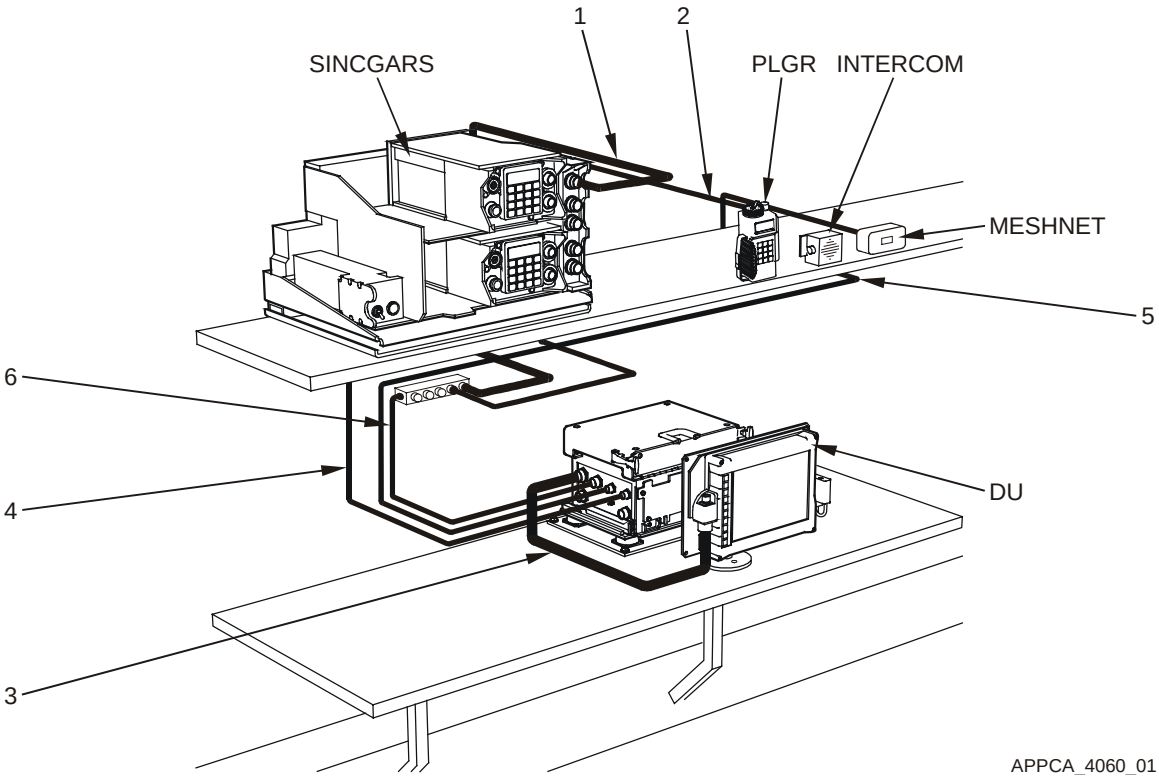

Figure V-5. Cable Run

Key and Parts List for Figure V-5

ITEM NO.	NOMENCLATURE	CAGE CODE	PART NUMBER	NSN	QTY	SMR
1	Cable Assembly W3N	0J198	881336-1	5995-01-478-4913	1	PAODD
2	Cable Assembly W3P	0J198	881335-3	5995-01-478-4898	1	PAODD
3	Cable Assembly W2	0J198	881327-1	5995-01-478-4876	1	PAODD
4	Cable Assembly W1	0J198	861880-1	5995-01-478-4776	1	PAODD
5	Cable Assembly W4MN	0J198	881271-1	5995-01-478-4938	1	PAODD
6	Adapter Assy SIAD W3	0J198	881331-1	4920-01-478-3722	1	PAODD
--	Strap, Tie Down, Elect	39428	7130K31		A/R	PAOZZ

V–6.8 REMOVE/REPLACE PU ISOLATION ASSEMBLY

Refer to Figure V-6.

NOTE

Ground straps are attached to components at one end (PU and DU) and a frame ground at the other end. Regardless of where the ground strap terminates, it is usually a burnished (void of paint) area. If the ground strap is removed from a burnished area, make sure to return it to the same burnished area. Where applicable, always connect the ground strap first when assembling, and disconnect the ground strap last when disassembling.

V–6.8.1 REMOVE PU ISOLATION ASSEMBLY

WARNING

Before conducting maintenance involving the removal and replacement of system components, ensure that all power to the FBCB2 system is off (including power from the vehicle). Failure to comply with warning may result in equipment damage or injury to personnel.

a. Power down AN/UYK-128(V) system IAW Operator's Manual TM 11-7010-326-10, or Pocket Guide TB 11-7010-326-10.

b. Loosen RAM-Ball knob and move DU to allow access to PU.

NOTE

Do not remove the Removable Hard Disk Drive Cartridge (RHDDC), locking bracket, or keyboard unit stowage box from PU.

c. Remove PU IAW Unit Maintenance Manual TM 11-7010-326-20&P, Chapter 2.

d. Remove one hex head screw (2), lock washer (3), flat washer (4) and ground strap from PU isolation assembly (1) bottom plate and rivet nut (5) using a 7/16" socket with ratchet and 7/16" open-end wrench.

e. Remove remaining three hex head screws (2), lock washers (3) and flat washers (4) from PU isolation assembly (1) bottom plate and rivet nuts (5) using a 7/16" socket with ratchet and 7/16" open-end wrench.

f. Remove PU isolation assembly (1) from table.

V–6.8.2 REPLACE PU ISOLATION ASSEMBLY

a. Align four PU isolation assembly (1) bottom plate holes with PU rivet nut installation holes in table.

NOTE

To ensure positive ground, PU ground strap must make direct contact with bare metal. Ensure PU ground strap is installed in its original location at the PU isolation assembly bottom plate mounting hole. Slip the ground strap, flat washer and lock washer on the mounting screw before installing and tightening screw.

b. Install one hex head screw (2), lock washer (3), flat washer (4) and ground strap in PU isolation assembly (1) bottom plate and rivet nut (5) using a 7/16” socket with ratchet and 7/16” open-end wrench.

c. Install remaining three hex head screws (2), lock washers (3) and flat washers (4) on PU isolation assembly (1) bottom plate and rivet nuts (5) using a 7/16” socket with ratchet and 7/16” open-end wrench.

d. Install PU IAW Unit Maintenance Manual TM 11-7010-326-20&P, Chapter 2.

e. Adjust DU viewing angle and tighten RAM-Ball knob.

f. Perform Functional Check IAW paragraph V–6.1.

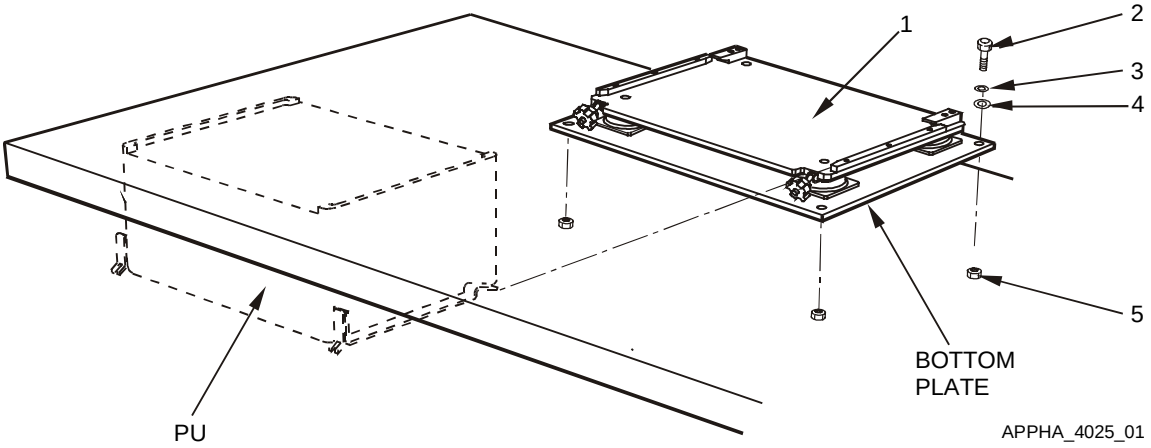

Figure V-6. Remove and Replace PU Isolation Assembly

Key and Parts List for Figure V-6

ITEM NO.	NOMENCLATURE	CAGE CODE	PART NUMBER	NSN	QTY	SMR
1	(PU Isolation Assembly) Plate, Resilient Mount PU	0J198	872826-1	5340-01-481-5742	1	PAODD
2	Screw, Cap, Hex Head	80204	B1821AH025C100N	5305-01-389-7984	4	PAOZZ
3	Washer, Lock	96906	MS35338-44	5310-00-582-5965	4	PAOZZ
4	Washer, Flat	96906	MS27183-10	5310-00-809-4058	4	PAOZZ
5	Nut, Plain, Blind Rivet	96906	MS27130-S33	5310-00-158-9408	4	PAOZZ
--	Assembly, PU Lock	0J198	861865-1		1	XBOOO
--	Bracket, Locking	0J198	861871-1		1	XBOZZ
--	Screw	80205	MS35190-253	5305-00-059-4568	2	PAOZZ

V–6.9 REMOVE/REPLACE DU ISOLATION ASSEMBLY

Refer to Figure V-7.

NOTE

Ground straps are attached to components at one end (PU and DU) and a frame ground at the other end. Regardless of where the ground strap terminates, it is usually a burnished (void of paint) area. If the ground strap is removed from a burnished area, make sure to return it to the same burnished area. Where applicable, always connect the ground strap first when assembling, and disconnect the ground strap last when disassembling.

V–6.9.1 REMOVE DU ISOLATION ASSEMBLY

WARNING

Before conducting maintenance involving the removal and replacement of system components, ensure that all power to the FBCB2 system is off (including power from the vehicle). Failure to comply with warning may result in equipment damage or injury to personnel.

a. Power down AN/UYK-128(V) system IAW Operator's Manual TM 11-7010-326-10, or Pocket Guide TB 11-7010-326-10.

b. Remove DU IAW Unit Maintenance Manual TM 11-7010-326-20&P, Chapter 2.

NOTE

Note cable routing and tie-wrap locations before removing cable or tie-wraps.

c. Remove tie-wraps securing W2 display cable and ground strap to DU isolation assembly using diagonal wire cutters.

d. Loosen RAM-Ball knob while supporting DU isolation assembly (1) until RAM-Ball display base with ball can be lifted free of RAM-Ball socket arm.

e. Remove four self-locking wing nuts (2), spacers (3) and square neck bolts (4) from RAM-Ball display base with ball and DU isolation assembly (1) bottom plate.

f. Remove DU isolation assembly (1) from RAM-Ball display base.

V–6.9.2 REPLACE DU ISOLATION ASSEMBLY

a. Align four RAM-Ball display base with ball installation holes with slots in the DU isolation assembly (1) bottom plate.

b. Install four square neck bolts (4), spacers (3) and self-locking wing nuts (2) and secure DU isolation assembly (1) bottom plate to RAM-Ball display base with ball.

CAUTION

Ensure RAM-Ball is free of dirt and contaminants before reassembling. Failure to comply can result in slippage or excess wear of RAM-Ball assembly.

c. Inspect and clean RAM-Ball socket arm and display base with ball, as necessary, using clean lint-free wipes.

d. Insert RAM-Ball display base with ball into RAM-Ball socket arm.

e. Adjust viewing angle and tighten RAM-Ball knob.

f. Secure W2 display cable and ground strap to DU isolation assembly (1) bottom plate using tie-wraps.

g. Dress tie-wraps using diagonal wire cutters.

h. Replace DU IAW Unit Maintenance Manual TM 11-7010-326-20&P, Chapter 2.

i. Perform Functional Check IAW paragraph V–6.1.

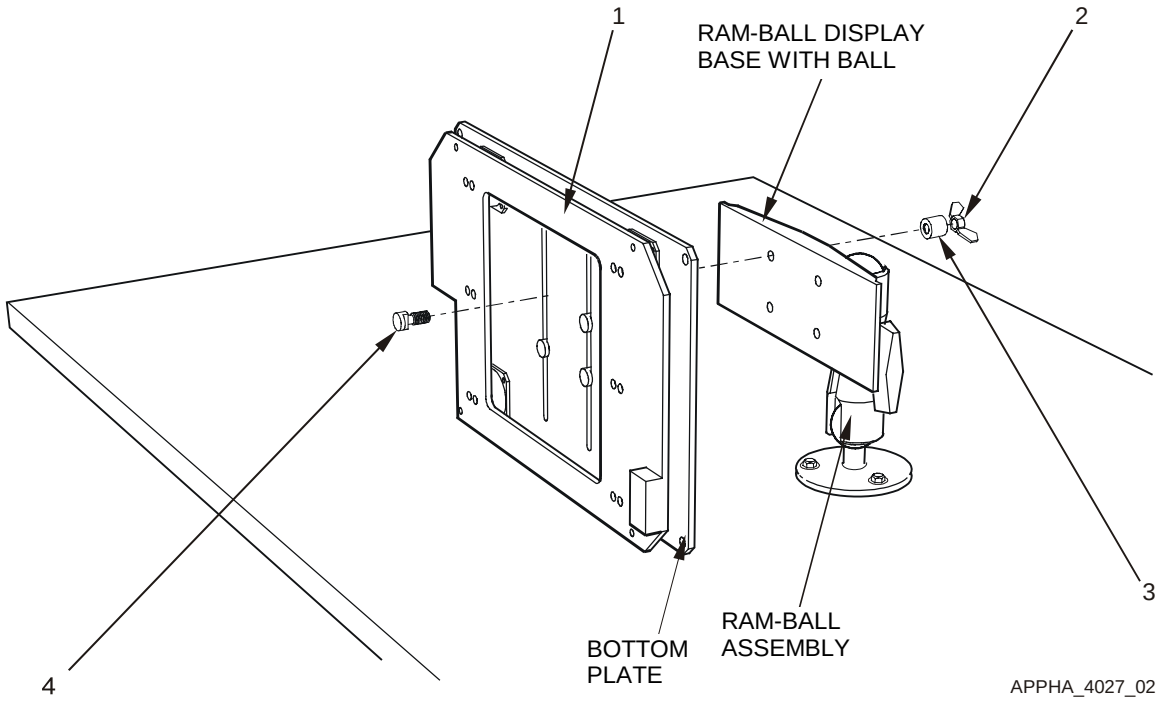

Figure V-7. Remove and Replace DU Isolation Assembly

Key and Parts List for Figure V-7

ITEM NO.	NOMENCLATURE	CAGE CODE	PART NUMBER	NSN	QTY	SMR
1	(DU isolation assembly) Plate, Resilient Mount DU	0J198	872871-1	5304-01-481-5743	1	PAODD
2	Nut, Self-Locking, Wing	96906	MS51553-420	5310-01-384-2546	4	PAOZZ
3	Spacer, Aluminum	57177	10705AL315C		4	PAOZZ
4	Bolt, Square Neck	96906	MS35751-17	5306-00-889-2943	4	PAOZZ
--	Assembly, Lock DU	0J198	872843-1		1	XBOOO
--	Bracket, Locking	0J198	861871-3		1	XBOZZ
--	Washer, Lock	96906	MS35338-42	5310-00-045-3299	2	PAOZZ
--	Screw	80205	MS35190-253	5305-00-059-4568	2	PAOZZ

V–6.10 REMOVE/REPLACE RAM-BALL ASSEMBLY

Refer to Figure V-8.

NOTE

Ground straps are attached to components at one end (PU and DU) and a frame ground at the other end. Regardless of where the ground strap terminates, it is usually a burnished (void of paint) area. If the ground strap is removed from a burnished area, make sure to return it to the same burnished area. Where applicable, always connect the ground strap first when assembling, and disconnect the ground strap last when disassembling.

V–6.10.1 REMOVE RAM-BALL ASSEMBLY

WARNING

Before conducting maintenance involving the removal and replacement of system components, ensure that all power to the FBCB2 system is off (including power from the vehicle). Failure to comply with warning may result in equipment damage or injury to personnel.

a. Power down AN/UYK-128(V) system IAW Operator's Manual TM 11-7010-326-10, or Pocket Guide TB 11-7010-326-10.

b. Remove DU IAW Unit Maintenance Manual TM 11-7010-326-20&P, Chapter 2.

NOTE

Note cable routing and tie-wrap locations before removing cable or tie-wraps.

c. Remove tie-wraps securing W2 display cable and ground strap to DU isolation assembly using diagonal wire cutters.

d. Loosen RAM-Ball knob while supporting DU isolation assembly until RAM-Ball display base with ball can be lifted free of RAM-Ball socket arm.

e. Remove four self-locking wing nuts (2), spacers (3) and square neck bolts (5) from RAM-Ball display base with ball and DU isolation assembly bottom plate.

f. Remove RAM-Ball socket arm from RAM-Ball mounting base with ball on table.

g. Remove three hex nuts (8), lock washers (7), flat washers (6) and flat head screws (4) from RAM-Ball mounting base with ball under table using a No. 3 cross-tip screwdriver and 7/16" socket with ratchet.

V–6.10.2 REPLACE RAM-BALL ASSEMBLY

a. Align three holes in RAM-Ball mounting base with ball with table installation holes.

b. Install three flat head screws (4), flat washers (6), lock washers (7) and hex nuts (8) under table to secure RAM-Ball mounting base using a No. 3 cross-tip screwdriver and 7/16” socket with ratchet.

CAUTION

Ensure RAM-Ball is free of dirt and contaminants before reassembling. Failure to comply can result in slippage or excess wear of RAM-Ball assembly.

c. Inspect and clean RAM-Ball socket arm, display and mounting base with ball, as necessary, using clean lint-free wipes.

d. Install RAM-Ball socket arm on RAM-Ball mounting base with ball.

e. Align four holes in RAM-Ball display base with ball with slots in DU isolation assembly bottom plate.

f. Install four square neck bolts (5), spacers (3) and self-locking wing nuts (2) to secure DU isolation assembly bottom plate to RAM-Ball display base with ball.

g. Insert RAM-Ball display base with ball into RAM-Ball socket arm.

h. Adjust viewing angle and tighten RAM-Ball knob.

i. Install DU IAW Unit Maintenance Manual TM 11-7010-326-20&P, Chapter 2.

j. Secure W2 display cable and ground strap to DU isolation assembly using tie-wraps.

k. Dress tie-wraps using diagonal wire cutters.

l. Perform Functional Check IAW paragraph V–6.1.

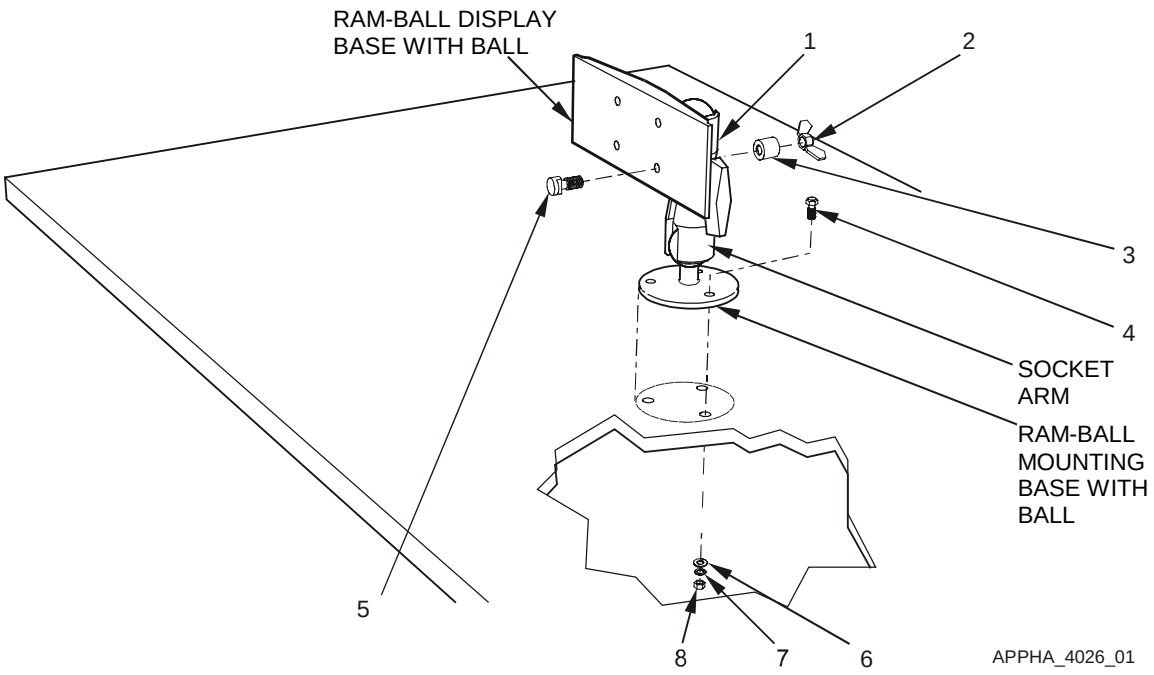

Figure V-8. Remove and Replace RAM-Ball Assembly

Key and Parts List for Figure V-8

ITEM NO.	NOMENCLATURE	CAGE CODE	PART NUMBER	NSN	QTY	SMR
1	Mount, RAM-Ball	0J198	889489-1		1	PAOZZ
2	Nut, Self-Locking, Wing	96906	MS51553-420	5310-01-384-2546	4	PAOZZ
3	Spacer, Aluminum	57177	10705AL315C		4	PAOZZ
4	Screw, Flat Head	96906	MS35190-296	5305-00-957-6642	3	PAOZZ
5	Bolt, Square Neck	96906	MS35751-17	5306-00-889-2943	4	PAOZZ
6	Washer, Flat	96906	MS27183-10	5310-00-809-4058	3	PAOZZ
7	Washer, Lock	96906	MS35338-44	5310-00-582-5965	3	PAOZZ
8	Nut, Plain, Hexagon	10110	MS51967-2	5310-01-291-3389	3	PAOZZ

V–6.11 REMOVE/REPLACE KEYBOARD UNIT (KU) STOWAGE BOX

Refer to Figure V-9.

V–6.11.1 REMOVE KEYBOARD UNIT (KU) STOWAGE BOX

a. Remove keyboard from stowage box, if stowed.

b. Loosen four KU stowage box captive screws (2) until the captive screws move freely using a No. 2 cross-tip screwdriver.

c. Remove KU stowage box (1) from PU.

V–6.11.2 REPLACE KEYBOARD UNIT (KU) STOWAGE BOX

a. Align four KU stowage box captive screws with PU installation holes.

b. Tighten four captive screws (2) using a No. 2 cross-tip screwdriver.

c. Stow keyboard, if necessary.

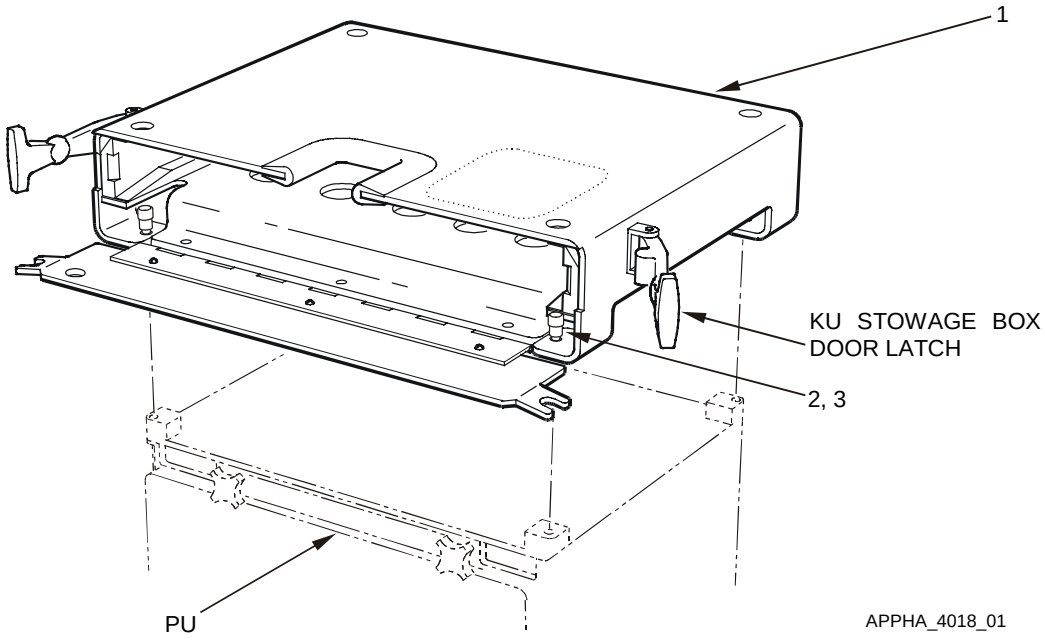

Figure V-9. Remove and Replace Keyboard Unit (KU) Stowage Box

Key and Parts List for Figure V-9

ITEM NO.	NOMENCLATURE	CAGE CODE	PART NUMBER	NSN	QTY	SMR
1	Box, KU Stowage	0J198	872845-1	2540-01-481-5744	1	PAODD
2	Screw, Captive Panel	57177	PH207-05SS1032		4	PAOZZ
3	Retainer, Panel Screw	57177	214-03SS10-32		4	PAOZZ
--	Case, Keyboard	0J198	872845-11		1	XBOOO
--	Label, Keyboard Box	0J198	881323-1		1	PAOZZ
--	Rubber Edge Trim	39428	8507K16	5325-01-435-2840	9	PAOZZ
--	Bottom, Stowage Box	0J198	872845-12		1	XBOOO
--	Side Rail, Keybd Box	0J198	872845-13		1	XBOOO
--	Side Rail, Keybd Box	0J198	872845-14		1	XBOOO
--	Door, Keyboard Box	0J198	872845-15		1	XBOOO
--	Hinge, Keyboard Box	0J198	872845-16		1	XBOOO
--	Strip, Rubber	0J198	872845-17		1	XBOOO
--	Rivet, Solid, Csk	96906	MS20426AD-4-5	5320-00-117-6950	6	PAOZZ
--	Label, Keyboard Box	0J198	881323-1		1	PAOZZ
--	Screw, Pan Head	96906	MS35206-229	5305-00-984-4989	14	PAOZZ
--	Washer, Flat	96906	MS27183-5	5310-00-983-8483	16	PAOZZ
--	Washer, Lock	96906	MS35338-41	5310-00-045-4007	13	PAOZZ
--	Nut, Plain	96906	MS35649-262	5310-00-934-9747	3	PAOZZ
--	Adhesive	04963	SCOTCH-GRIP RUB	8040-00-664-4318	1	PAOZZ
--	Grip, Handle Assembly	0J198	861867-1		1	XBOOO
--	Grip, Handle	0J198	861869-1		1	XBOZZ
--	Screw, Machine	96906	MS35206-228	5305-00-984-4988	4	PAOZZ
--	Washer, Lock	96906	MS35338-41	5310-00-045-4007	4	PAOZZ
--	Tape, Shielding, Elect	39428	7648A34		1	XBOZZ

V–6.12 REMOVE/REPLACE KEYBOARD UNIT (KU) STOWAGE BOX DOOR LATCHES

Refer to Figure V-10.

V–6.12.1 REMOVE KEYBOARD UNIT (KU) STOWAGE BOX DOOR LATCHES

a. Pull rubber T-handles and unfasten KU stowage box door latches, if necessary.

b. Remove two pan head screws (1), lock washers (2) and flat washers (3) from each KU stowage box door latch (4) using a No. 2 cross-tip screwdriver.

c. Remove KU stowage box door latch (4).

V–6.12.2 REPLACE KEYBOARD UNIT (KU) STOWAGE BOX DOOR LATCHES

NOTE

The same KU stowage box door latch part is used for each side of the keyboard stowage box. Position the bumper that is on one side of the latch so it is toward the side of the keyboard stowage box when fastened.

a. Align KU stowage box door latch mounting holes with mounting holes in KU stowage box.

b. Install and tighten two pan head screws (1), lock washers (2) and flat washers (3) for each KU stowage box door latch (4), using a No. 2 cross-tip screwdriver.

c. Pull rubber T-handles and fasten KU stowage box door latches.

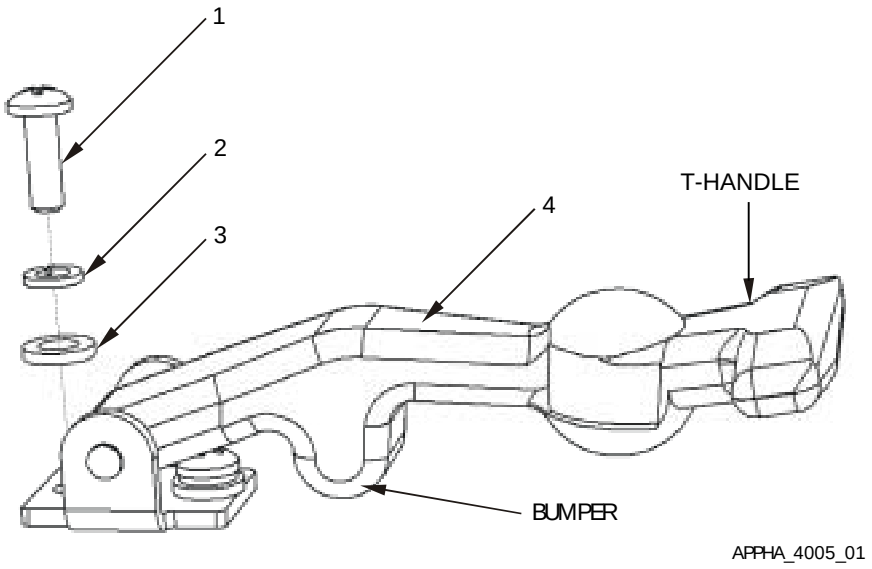

Figure V-10. Remove and Replace Keyboard Unit (KU) Stowage Box Door Latches

Key and Parts List Figure V-10

ITEM NO.	NOMENCLATURE	CAGE CODE	PART NUMBER	NSN	QTY	SMR
1	Screw, Pan Head	96906	MS35206-229	5305-00-984-4989	4	PAOZZ
2	Washer, Lock	96906	MS35338-41	5310-00-045-4007	4	PAOZZ
3	Washer, Flat	96906	MS27183-5	5310-00-983-8483	4	PAOZZ
4	(KU stowage box door latch) Latch, Thumb	94222	37-20-071-20	5340-01-351-3340	2	PAOZZ

APPENDIX W

SUPPLEMENTARY INFORMATION FOR

M1068 STANDARDIZED INTEGRATED

COMMAND POST SHELTER (SICPS) BATTALION

TABLE OF CONTENTS

Page
W–1 GENERAL W–3
W–2 COMPONENT ITEM NUMBERS AND PART NUMBERS W–3
W–3 SYSTEM INTERFACES W–4
W–3.1 MECHANICAL W–4
W–3.2 CABLE INTERFACES W–4
W–4 COMPONENT LOCATION W–6
W–4.1 GENERAL LOCATION W–6
W–4.2 MOUNTING W–7
W–5 PLATFORM-UNIQUE TROUBLESHOOTING W–9
W–6 REMOVAL/REPLACEMENT IN THE PLATFORM W–9
W–6.1 FUNCTIONAL CHECK W–9
W–6.2 REMOVE/REPLACE W1 POWER CABLE W–10
W–6.3 REMOVE/REPLACE W2 DISPLAY CABLE W–11
W–6.4 REMOVE/REPLACE W3 SERIAL INTERFACE ADAPTER DEVICE (SIAD) W–12
W–6.5 REMOVE/REPLACE W3P PLGR CABLE W–13
W–6.6 REMOVE/REPLACE W3N INC CABLE W–14
W–6.7 REMOVE/REPLACE W4 AUDIO CABLE W–15
W–6.8 REMOVE/REPLACE PU ISOLATION ASSEMBLY W–17
W–6.9 REMOVE/REPLACE DU ISOLATION ASSEMBLY W–20
W–6.10 REMOVE/REPLACE RAM-BALL ASSEMBLY W–23
W–6.11 REMOVE/REPLACE KEYBOARD UNIT (KU) STOWAGE BOX W–26
W–6.12 REMOVE/REPLACE KEYBOARD UNIT (KU) STOWAGE BOX DOOR LATCHES W–28

LIST OF ILLUSTRATIONS

Page
Figure W-1. Equipment Interface Block Diagram W–5
Figure W-2. Relative Component Locations W–6
Figure W-3. Equipment Mounting W–7
Figure W-4. Top Down View-Table Mounted Equipment..... W–8
Figure W-5. Cable Run W–16
Figure W-6. Remove and Replace PU Isolation Assembly..... W–18
Figure W-7. Remove and Replace DU Isolation Assembly W–22
Figure W-8. Remove and Replace RAM-Ball Assembly..... W–25
Figure W-9. Remove and Replace Keyboard Unit (KU) Stowage Box W–26
Figure W-10. Remove and Replace Keyboard Unit (KU) Stowage Box Door Latches..... W–29

W–1 GENERAL

This appendix describes the interfaces between the FBCB2 equipment and the M1068 Standardized Integrated Command Post Shelter (SICPS) BATTALION. This appendix also identifies the component parts of the M1068 platform installation kit and details the removal and replacement procedures particular to the M1068 SICPS BATTALION.

W–2 COMPONENT ITEM NUMBERS AND PART NUMBERS

Key and Parts List tables contained in the Removal and Replacement section of this Appendix serve a dual purpose. Use the Item Numbers in the Key to identify components and attaching hardware shown in the Figures illustrating the tasks. The nomenclature and part number for the hardware and equipment mounting components of the installation kit also are keyed to the Item Numbers in the tables. Additional parts ordering information, such as Contractor and Government Entity code (CAGE); National Stock Number (NSN); quantity; and Source, Maintenance and Recoverability (SMR) codes, are provided. The Key and Parts List follow the task illustrations.

W–3 SYSTEM INTERFACES

W–3.1 MECHANICAL

The mechanical hardware-to-hardware interfaces include:

a. Cables

b. Processor Unit (PU)

c. Display Unit (DU)

d. Keyboard Unit (KU)

W–3.2 CABLE INTERFACES

Figure W-1 illustrates a block diagram of the interface between FBCB2 and the M1068 SICPS BATTALION (Platform). Figure W-1 also illustrates the signal and control interfaces along with the terminal connector labels (e.g., P1, P2). The purpose of each cable is listed below:

Cable Name	Purpose
W1–Cable	Supplies vehicle power to the AN/UYK-128(V) computer and its subassemblies.
W2–Cable	Supplies power and signals to the Display Unit (DU) and Keyboard Unit (KU). Returns Man Machine Interface (MMI) information from the KU to the Processor Unit (PU).
W3–Cable	The Serial Interface Adapter Device (SIAD) is a conduit assembly that breaks out each of the serial interface ports to a connector.
W3P–Cable	Collects position and time information from the PLGR.
W3N–Cable	Provides duplex communication between the PU, Internet Controller (INC) and radios.
W4–Cable	Connects audio signals from PU to the Intercom system and Combat Vehicle Crew (CVC) Helmet.
W5–Cable	The Expansion Interface Adapter Device (EIAD) is connected to the Universal Serial Bus (USB) connector only when this vehicle is to be used in a Tactical Operations Center (TOC) setup. When used in this configuration, it is connected between the PU J5 connector and local router.
Ground Strap	Provides safety ground for the PU.
Ground Strap	Provides safety ground for the DU.

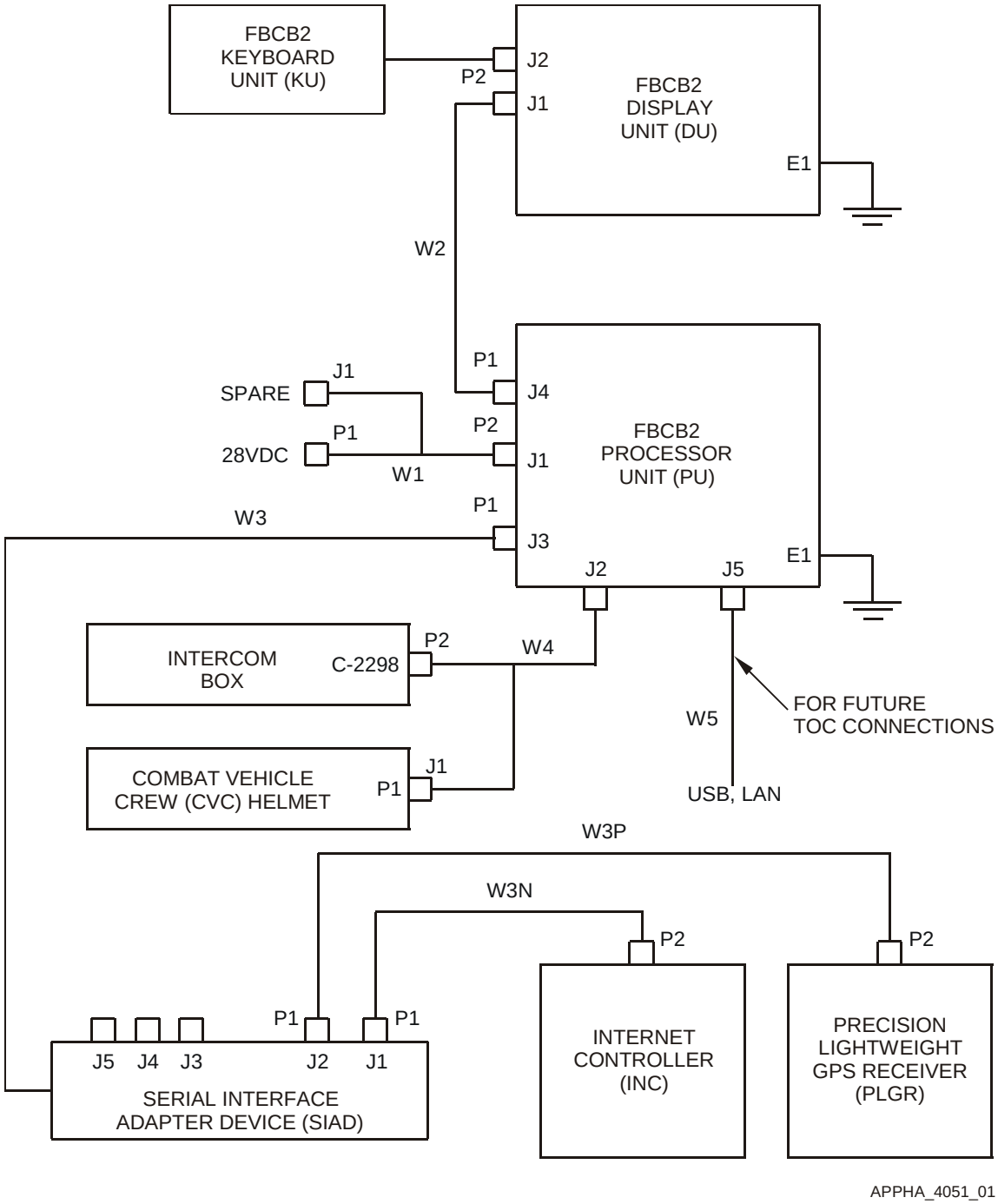

Figure W-1. Equipment Interface Block Diagram

W–4 COMPONENT LOCATION

W–4.1 GENERAL LOCATION

Figure W-2 shows the relative locations of the FBCB2 computer equipment and mounting components in the M1068 SICPS BATTALION configuration. The equipment is mounted roadside on a table and shelf above.

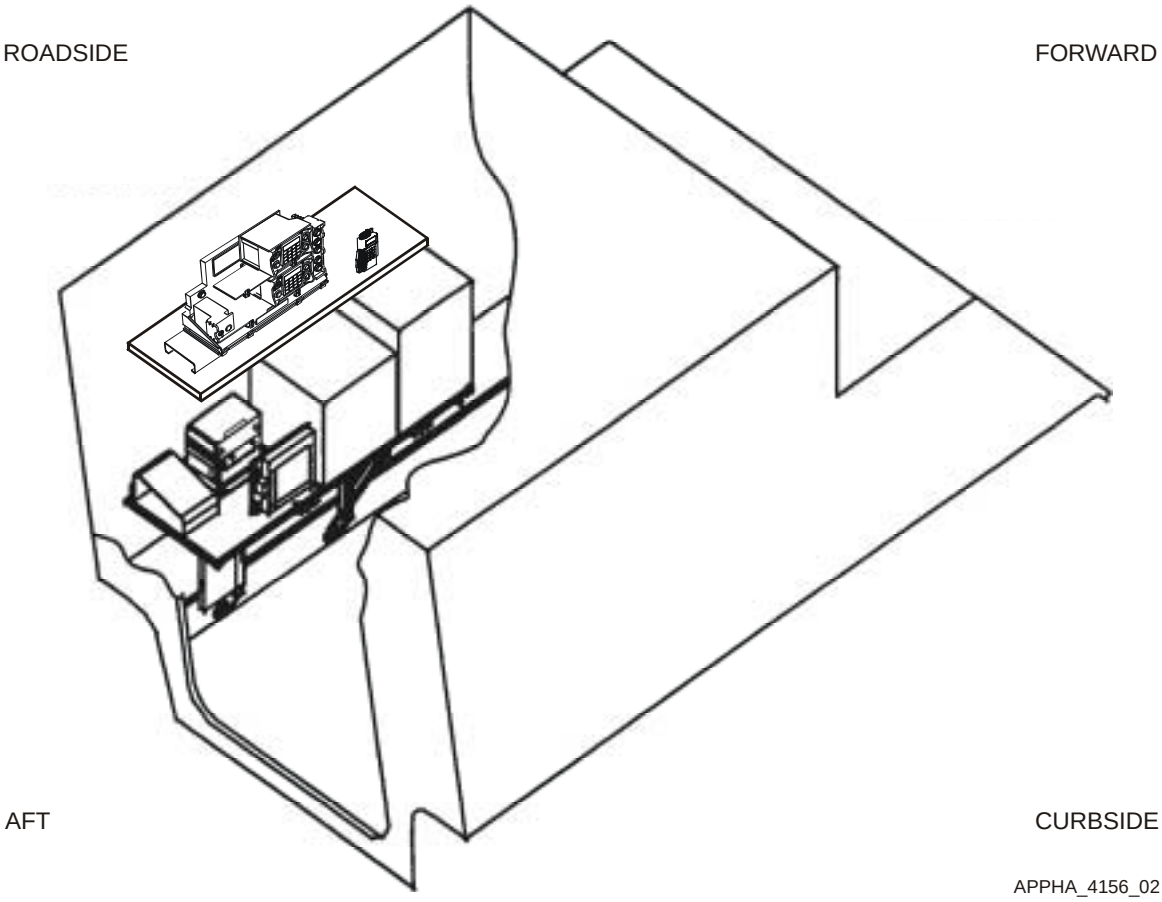

Figure W-2. Relative Component Locations

W–4.2 MOUNTING

Figure W-3 shows the mounting of components on the roadside table and shelf above.

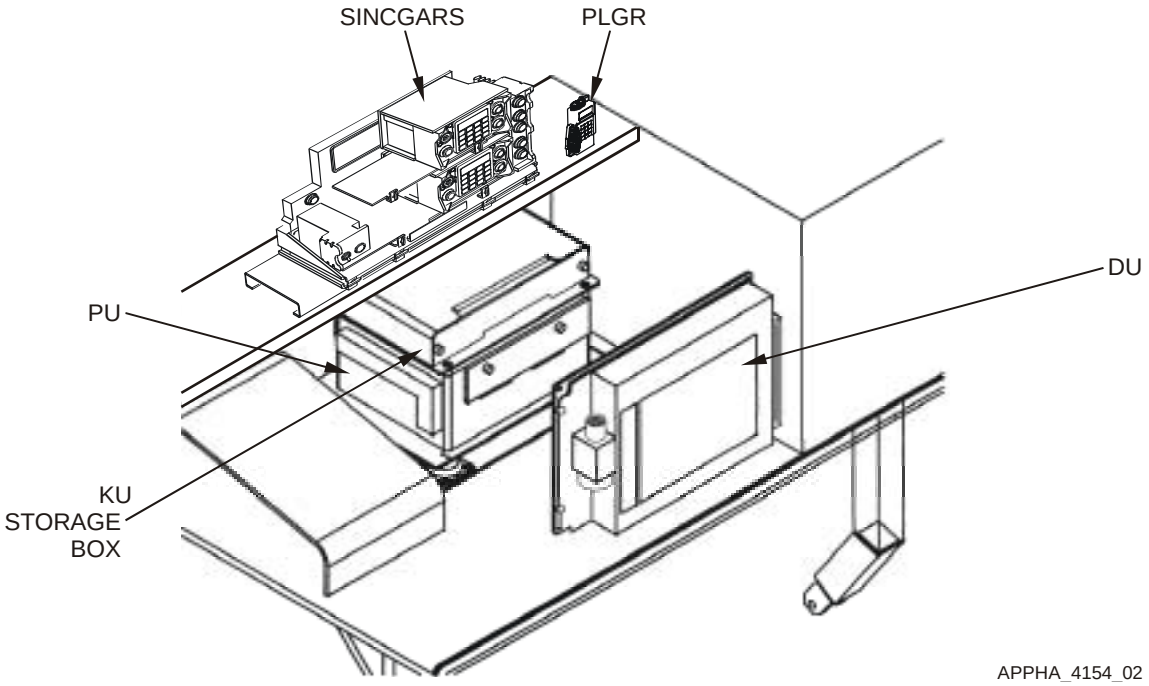

Figure W-3. Equipment Mounting

W–4.2.1 TABLE MOUNTED EQUIPMENT

Figure W-4 illustrates a top down view of the DU, PU and KU stowage box mounted on the roadside table. The KU stowage box is mounted on top of the PU.

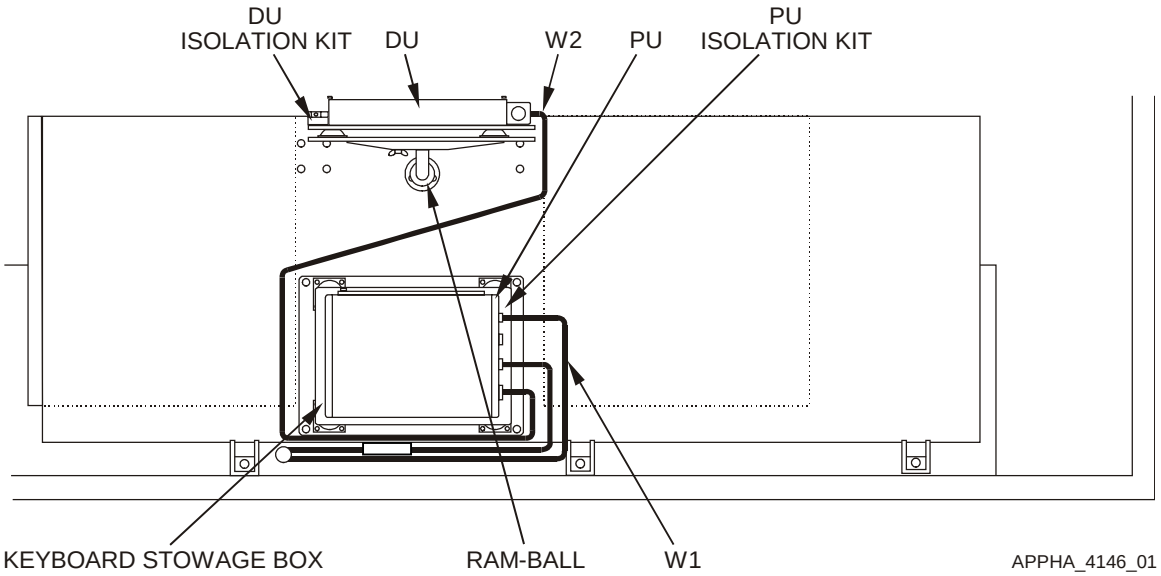

Figure W-4. Top Down View-Table Mounted Equipment

W–5 PLATFORM-UNIQUE TROUBLESHOOTING

No unique troubleshooting procedures are required for this vehicle.

W–6 REMOVAL/REPLACEMENT IN THE PLATFORM

Most installations must be tailored to the platform. Cables and brackets are unique to the installation. Before a part or assembly is removed from a vehicle, fill out a “Maintenance Request” DA Form 2407. One copy of this completed form must remain with the vehicle and the remaining copies must be kept with the failed component. To prove the operability of the system after an item is replaced, perform the system Functional Check.

W–6.1 FUNCTIONAL CHECK

W–6.1.1 POWER UP

Power up and initialize all interface equipment and the AN/UYK-128(V) In Accordance With (IAW) Operator’s Manual TM 11-7010-326-10, or Pocket Guide TB 11-7010-326-10.

W–6.1.2 VERIFICATION

NOTE

Observe that the Display Unit PWR, DISP and CPU green LED lights are lit.

a. Observe that the PLGR synchronizes with PU, indicated by the PLGR dialog box showing green.

b. Observe that the Router synchronizes with the PU, indicated by the Router dialog box showing green.

c. At the Session Manager screen, select OPS button to display the OPS screen.

d. Verify the GPS status is either green or amber on the Classification/Status Bar.

e. Verify the Communications status is either green or amber on the Classification/Status Bar.

W–6.1.3 POWER DOWN

Power down all interface equipment and the AN/UYK-128(V) IAW the Operator’s Manual TM 11-7010-326-10, or Pocket Guide TB 11-7010-326-10.

W–6.2 REMOVE/REPLACE W1 POWER CABLE

Refer to Figure W-5.

W–6.2.1 REMOVE W1 POWER CABLE

WARNING

Before conducting maintenance involving the removal and replacement of system components, ensure that all power to the FBCB2 system is off (including power from the vehicle). Failure to comply with warning may result in equipment damage or injury to personnel.

a. Power down AN/UYK-128(V) system IAW Operator's Manual TM 11-7010-326-10, or Pocket Guide TB 11-7010-326-10.

b. Power down SINCGARS IAW TM 11-5820-890-10-8.

c. Release and slide SINCGARS Vehicular Amplifier-Adapter (VAA) (AM 7239/VRC) forward from Mounting Base (MB) (MT-6352/VRC) to access W1-P1 cable connector IAW TM 11-5820-890-10-8.

d. Disconnect W1-P1 cable connector from SINCGARS MB A4-J2 connector.

e. Disconnect W1-J1 cable connector from power interface cable (if applicable).

f. Disconnect W1-P2 cable connector from PU J1 connector.

g. Install protective cap on PU J1 connector.

NOTE

Note cable routing and tie-wrap locations before removing cable or tie-wraps.

h. Remove tie-wraps securing W1 cable using diagonal wire cutters.

i. Remove W1 power cable (4).

W–6.2.2 REPLACE W1 POWER CABLE

a. Route W1 power cable (4).

b. Remove protective cap from PU J1 connector.

c. Connect W1-P2 cable connector to PU J1 connector.

d. Connect W1-J1 cable connector to power interface cable (if applicable).

e. Connect W1-P1 cable connector to SINCGARS Mounting Base (MB) (MT-6352A/VRC) A4-J2 connector.

f. Secure W1 cable using tie-wraps, as applicable.

g. Dress tie-wraps using diagonal wire cutters.

h. Slide SINCGARS Vehicular Amplifier-Adapter (VAA) (AM 7239/VRC) back into SINCGARS MB and fasten IAW TM 11-5820-890-10-8.

i. Perform Functional Check IAW paragraph W–6.1.

W–6.3 REMOVE/REPLACE W2 DISPLAY CABLE

Refer to Figure W-5.

W–6.3.1 REMOVE W2 DISPLAY CABLE

WARNING

Before conducting maintenance involving the removal and replacement of system components, ensure that all power to the FBCB2 system is off (including power from the vehicle). Failure to comply with warning may result in equipment damage or injury to personnel.

a. Power down AN/UYK-128(V) system IAW Operator's Manual TM 11-7010-326-10, or Pocket Guide TB 11-7010-326-10.

b. Disconnect W2-P1 cable connector from PU J4 connector.

c. Install protective cap on PU J4 connector.

d. Disconnect W2-P2 cable connector from display J1 connector.

e. Install protective cap on display J1 connector.

NOTE

Note cable routing and tie-wrap locations before removing cable or tie-wraps.

f. Remove tie-wraps from W2 cable and ground strap using diagonal wire cutters.

g. Remove W2 display cable (3).

W–6.3.2 REPLACE W2 DISPLAY CABLE

a. Route W2 display cable (3) between PU and vehicle wall, then between PU and back of DU.

b. Remove protective cap from display J1 connector.

c. Connect W2-P2 cable connector to display J1 connector.

d. Remove protective cap from PU J4 connector.

e. Connect W2-P1 cable connector to PU J4 connector.

f. Secure W2 cable and ground strap using tie-wraps.

g. Dress tie-wraps using diagonal wire cutters.

h. Perform Functional Check IAW paragraph W–6.1.

W–6.4 REMOVE/REPLACE W3 SERIAL INTERFACE ADAPTER DEVICE (SIAD)

Refer to Figure W-5.

W–6.4.1 REMOVE W3 SERIAL INTERFACE ADAPTER DEVICE (SIAD)

WARNING

Before conducting maintenance involving the removal and replacement of system components, ensure that all power to the FBCB2 system is off (including power from the vehicle). Failure to comply with warning may result in equipment damage or injury to personnel.

a. Power down AN/UYK-128(V) system IAW Operator's Manual TM 11-7010-326-10, or Pocket Guide TB 11-7010-326-10.

b. Disconnect W3N-P1 cable connector from W3 SIAD J1 connector.

c. Disconnect W3P-P1 cable connector from W3 SIAD J2 connector.

d. Disconnect W3 SIAD-P1 cable connector from PU J3 connector.

e. Install protective cap on PU J3 connector.

NOTE

Note cable routing and tie-wrap locations before removing cable or tie-wraps.

f. Remove tie-wraps securing W3 SIAD using diagonal wire cutters.

g. Remove W3 SIAD (6).

W–6.4.2 REPLACE W3 SERIAL INTERFACE ADAPTER DEVICE (SIAD)

a. Route W3 SIAD (6).

b. Remove protective cap from PU J3 connector.

c. Connect W3 SIAD-P1 cable connector to PU J3 connector.

d. Connect W3P-P1 cable connector to W3 SIAD J2 connector.

e. Connect W3N-P1 cable connector to W3 SIAD J1 connector.

f. Secure W3 SIAD using tie-wraps.

g. Dress tie-wraps using diagonal wire cutters.

h. Perform Functional Check IAW paragraph W–6.1.

W–6.5 REMOVE/REPLACE W3P PLGR CABLE

Refer to Figure W-5.

W–6.5.1 REMOVE W3P PLGR CABLE

WARNING

Before conducting maintenance involving the removal and replacement of system components, ensure that all power to FBCB2 system is off (including power from the vehicle). Failure to comply with warning may result in equipment damage or injury to personnel.

a. Power down AN/UYK-128(V) system IAW Operator's Manual TM 11-7010-326-10, or Pocket Guide TB 11-7010-326-10.

b. Disconnect W3P-P1 cable connector from W3 SIAD J2 connector.

c. Unfasten over-center latch and lift PLGR from mounting rack.

d. Disconnect W3P-P2 cable connector from PLGR J2 connector using an offset flat-tip screwdriver.

NOTE

Note cable routing and tie-wrap locations before removing cable or tie-wraps.

e. Remove tie-wraps securing W3P cable using diagonal wire cutters.

f. Remove W3P cable (2).

W–6.5.2 REPLACE W3P PLGR CABLE

a. Route W3P cable (2).

b. Connect W3P-P2 cable connector to PLGR J2 connector using an offset flat-tip screwdriver.

c. Install PLGR in mounting rack and fasten over-center latch.

d. Connect W3P-P1 cable connector to W3 SIAD J2 connector.

e. Secure W3P cable using tie-wraps.

f. Dress tie-wraps using diagonal wire cutters.

g. Perform Functional Check IAW paragraph W–6.1.

W–6.6 REMOVE/REPLACE W3N INC CABLE

Refer to Figure W-5.

W–6.6.1 REMOVE W3N INC CABLE

WARNING

Before conducting maintenance involving the removal and replacement of system components, ensure that all power to the FBCB2 system is off (including power from the vehicle). Failure to comply with warning may result in equipment damage or injury to personnel.

a. Power down AN/UYK-128(V) system IAW Operator's Manual TM 11-7010-326-10, or Pocket Guide TB 11-7010-326-10.

b. Disconnect W3N-P1 cable connector from W3 SIAD J1 connector.

c. Disconnect W3N-P2 cable connector from SINCGARS INC J6 connector.

NOTE

Note cable routing and tie-wrap locations before removing cable or tie-wraps.

d. Remove tie-wraps securing W3N cable using diagonal cutters.

e. Remove W3N cable (1).

W–6.6.2 REPLACE W3N INC CABLE

a. Route W3N cable (1).

b. Connect W3N-P2 cable connector to SINCGARS INC J6 connector.

c. Connect W3N-P1 cable connector to W3 SIAD J1 connector.

d. Secure W3N cable using tie-wraps.

e. Dress tie-wraps using diagonal wire cutters.

f. Perform Functional Check IAW paragraph W–6.1.

W–6.7 REMOVE/REPLACE W4 AUDIO CABLE

Refer to Figure W-5.

W–6.7.1 REMOVE W4 AUDIO CABLE

WARNING

Before conducting maintenance involving the removal and replacement of system components, ensure that all power to the FBCB2 system is off (including power from the vehicle). Failure to comply with warning may result in equipment damage or injury to personnel.

a. Power down AN/UYK-128(V) system IAW Operator's Manual TM 11-7010-326-10, or Pocket Guide TB 11-7010-326-10.

b. Disconnect W4-P1 cable connector from PU J2 connector.

c. Install protective cap on PU J2 connector.

d. Disconnect W4-P2 cable connector from Intercom Box C-2298 connector.

e. Disconnect W4-J1 cable connector from Combat Vehicle Crew (CVC) helmet P1 connector.

NOTE

Note cable routing and tie-wrap locations before removing cable or tie-wraps.

f. Remove tie-wraps securing W4 cable using diagonal wire cutters.

g. Remove W4 audio cable (5).

W–6.7.2 REPLACE W4 AUDIO CABLE

a. Route W4 audio cable (5).

b. Connect W4-J1 cable connector to CVC helmet P1 connector.

c. Connect W4-P2 cable connector to Intercom Box C-2298 connector.

d. Remove protective cap from PU J2 connector.

e. Connect W4-P1 cable connector to PU J2 connector.

f. Secure W4 cable using tie-wraps.

g. Dress tie-wraps using diagonal wire cutters.

h. Perform Functional Check IAW paragraph W–6.1.

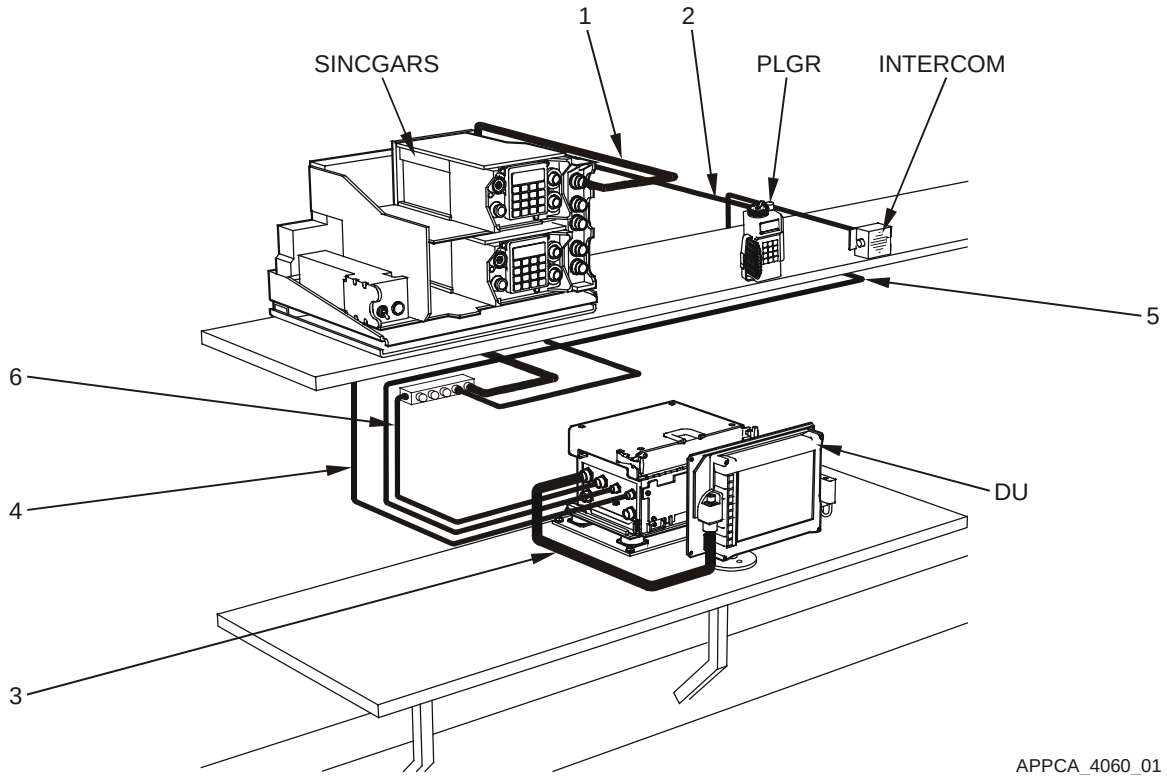

Figure W-5. Cable Run

Key and Parts List for Figure W-5

ITEM NO.	NOMENCLATURE	CAGE CODE	PART NUMBER	NSN	QTY	SMR
1	Cable Assembly W3N	0J198	881336-1	5995-01-478-4913		PAODD
2	Cable Assembly W3P	0J198	881335-3	5995-01-478-4898		PAODD
3	Cable Assembly W2	0J198	881327-1	5995-01-478-4876		PAODD
4	Cable Assembly W1	0J198	861880-1	5995-01-478-4776		PAODD
5	Cable Assembly W4	0J198	881270-1	5995-01-478-4924		PAODD
6	Adapter Assy SIAD W3	0J198	881331-1	4920-01-478-3722		PAODD
--	Strap, Tie Down, Elect	39428	7130K31		A/R	PAOZZ

W–6.8 REMOVE/REPLACE PU ISOLATION ASSEMBLY

Refer to Figure W-6.

NOTE

Ground straps are attached to components at one end (PU and DU) and a frame ground at the other end. Regardless of where the ground strap terminates, it is usually a burnished (void of paint) area. If the ground strap is removed from a burnished area, make sure to return it to the same burnished area. Where applicable, always connect the ground strap first when assembling, and disconnect the ground strap last when disassembling.

W–6.8.1 REMOVE PU ISOLATION ASSEMBLY

WARNING

Before conducting maintenance involving the removal and replacement of system components, ensure that all power to the FBCB2 system is off (including power from the vehicle). Failure to comply with warning may result in equipment damage or injury to personnel.

a. Power down AN/UYK-128(V) system IAW Operator's Manual TM 11-7010-326-10, or Pocket Guide TB 11-7010-326-10.

NOTE

Do not remove the Removable Hard Disk Drive Cartridge (RHDDC), locking bracket, or keyboard unit stowage box from PU.

b. Loosen RAM-Ball knob and move DU to allow access to PU.

c. Remove PU IAW Unit Maintenance Manual TM 11-7010-326-20&P, Chapter 2.

d. Remove one hex head screw (2), lock washer (3), flat washer (4), and ground strap from PU isolation assembly (1) bottom plate and rivet nut (5) using a 7/16" socket with ratchet and 7/16" open-end wrench.

e. Remove remaining three hex head screws (2), lock washers (3) and flat washers (4) from PU isolation assembly (1) bottom plate and rivet nuts (5) using a 7/16" socket with ratchet and 7/16" open-end wrench.

f. Remove PU isolation assembly (1) from table.

W–6.8.2 REPLACE PU ISOLATION ASSEMBLY

a. Align four PU isolation assembly (1) bottom plate holes with PU rivet nut installation holes in table.

NOTE

To ensure positive ground, PU ground strap must make direct contact with bare metal. Ensure PU ground strap is installed in its original location at the PU isolation assembly bottom plate mounting hole. Slip the ground strap, flat washer and lock washer on the mounting screw before installing and tightening nut.

b. Install one hex head screw (2), lock washer (3), flat washer (4) and ground strap in PU isolation assembly (1) bottom plate and rivet nut (5) using a 7/16” socket with ratchet and 7/16” open-end wrench.

c. Install remaining three hex head screws (2), lock washers (3) and flat washers (4) in PU isolation assembly (1) bottom plate and rivet nuts (5) using 7/16” socket with ratchet and 7/16” open-end wrench.

d. Install PU IAW Unit Maintenance Manual TM 11-7010-326-20&P, Chapter 2.

e. Adjust DU viewing angle and tighten RAM-Ball knob.

f. Perform Functional Check IAW paragraph W–6.1.

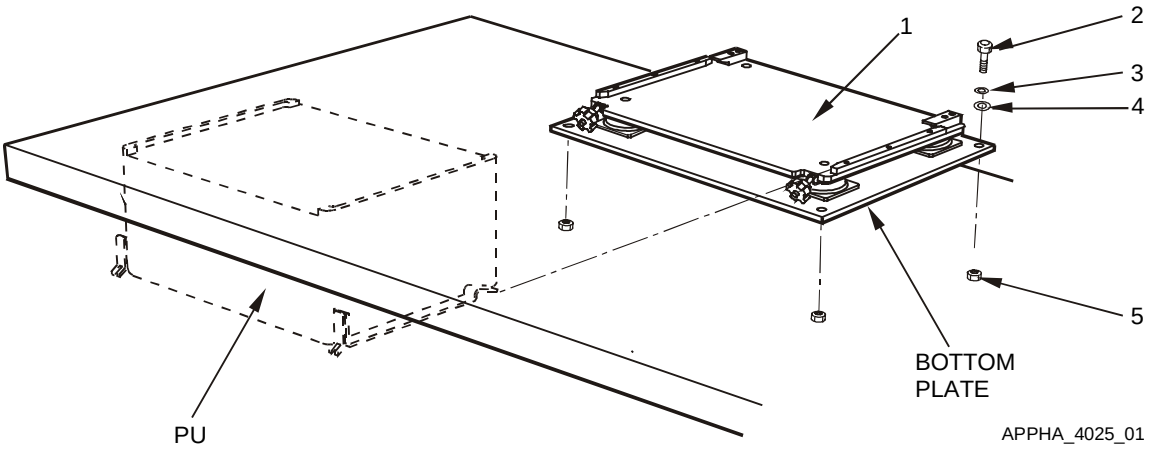

Figure W-6. Remove and Replace PU Isolation Assembly

Key and Parts List for Figure W-6

ITEM NO.	NOMENCLATURE	CAGE CODE	PART NUMBER	NSN	QTY	SMR
1	(PU isolation assembly) Plate, Resilient Mount PU	0J198	872826-1	5340-01-481-5742		PAODD
2	Screw, Cap, Hex Head	80204	B1821AH025C100N	5305-01-389-7984	4	PAOZZ
3	Washer, Lock	96906	MS35338-44	5310-00-582-5965	4	PAOZZ
4	Washer, Flat	96906	MS27183-10	5310-00-809-4058	4	PAOZZ
5	Nut, Plain, Blind Rivet	96906	MS27130-S33	5310-00-158-9408	4	PAOZZ
--	Assembly, PU Lock	0J198	861865-1		1	XBOOO
--	Bracket, Locking	0J198	861871-1		1	XBOZZ
--	Screw	80205	MS35190-253	5305-00-059-4568	2	PAOZZ

W–6.9 REMOVE/REPLACE DU ISOLATION ASSEMBLY

Refer to Figure W-7.

NOTE

Ground straps are attached to components at one end (PU and DU) and a frame ground at the other end. Regardless of where the ground strap terminates, it is usually a burnished (void of paint) area. If the ground strap is removed from a burnished area, make sure to return it to the same burnished area. Where applicable, always connect the ground strap first when assembling, and disconnect the ground strap last when disassembling.

W–6.9.1 REMOVE DU ISOLATION ASSEMBLY

WARNING

Before conducting maintenance involving the removal and replacement of system components, ensure that all power to the FBCB2 system is off (including power from the vehicle). Failure to comply with warning may result in equipment damage or injury to personnel.

a. Power down AN/UYK-128(V) system IAW Operator's Manual TM 11-7010-326-10, or Pocket Guide TB 11-7010-326-10.

b. Remove DU IAW Unit Maintenance Manual TM 11-7010-326-20&P, Chapter 2.

NOTE

Note cable routing and tie-wrap locations before removing cable or tie-wraps.

c. Remove tie-wraps securing W2 display cable and ground strap to DU isolation assembly using diagonal wire cutters.

d. Loosen RAM-Ball knob while supporting DU isolation assembly (1) until RAM-Ball display base with ball can be lifted free of RAM-Ball socket arm.

e. Remove four self-locking wing nuts (2), spacers (3), and square neck bolts (4) from RAM-Ball display base with ball and DU isolation assembly (1) bottom plate.

f. Remove DU isolation assembly (1) from RAM-Ball display base.

W–6.9.2 REPLACE DU ISOLATION ASSEMBLY

a. Align four RAM-Ball display base with ball installation holes with slots in the DU isolation assembly (1) bottom plate.

b. Install four square neck bolts (4), spacers (3), and self-locking wing nuts (2) and secure DU isolation assembly (1) bottom plate to RAM-Ball display base with ball.

CAUTION

Ensure RAM-Ball is free of dirt and contaminants before reassembling. Failure to comply can result in slippage or excess wear of RAM-Ball assembly.

c. Inspect and clean RAM-Ball socket arm and display base with ball, as necessary, using clean lint-free wipes.

d. Insert RAM-Ball display base with ball into RAM-Ball socket arm.

e. Adjust viewing angle and tighten RAM-Ball knob.

f. Secure W2 display cable and ground strap to DU isolation assembly (1) bottom plate using tie-wraps.

g. Dress tie-wraps using diagonal wire cutters.

h. Replace DU IAW Unit Maintenance Manual TM 11-7010-326-20&P, Chapter 2.

i. Perform Functional Check IAW paragraph W–6.1.

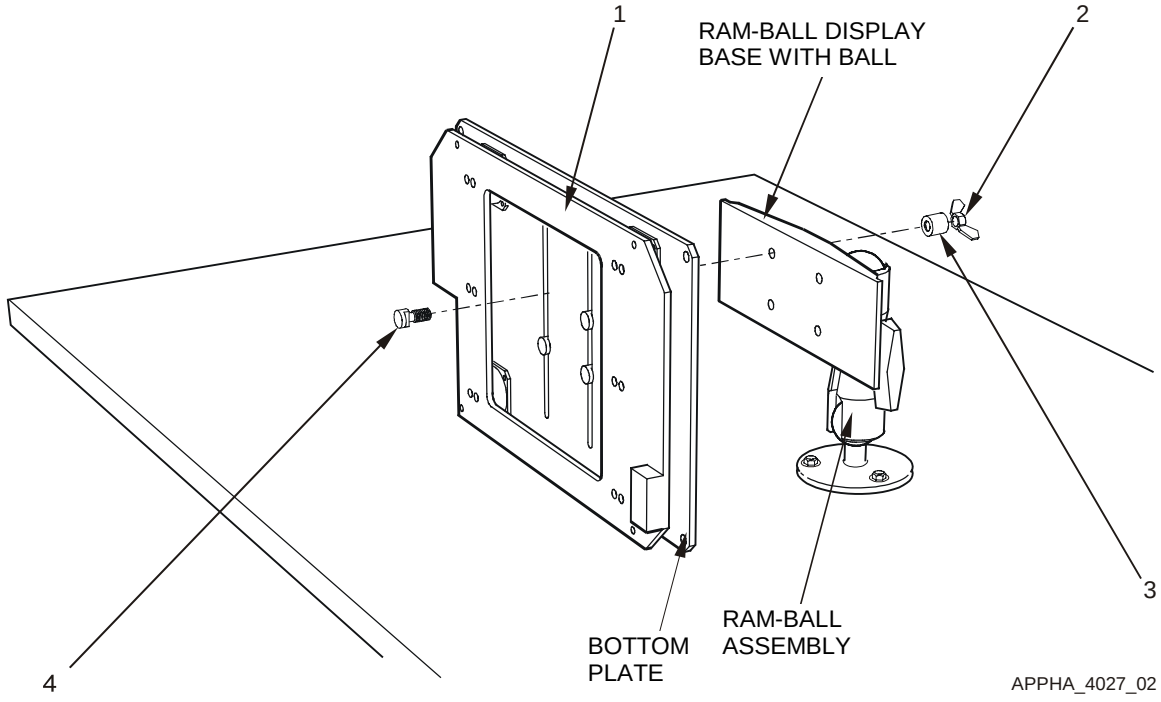

Figure W-7. Remove and Replace DU Isolation Assembly

Key and Parts List for Figure W-7

ITEM NO.	NOMENCLATURE	CAGE CODE	PART NUMBER	NSN	QTY	SMR
1	(DU isolation assembly) Plate, Resilient Mount DU		872871-1	5340-01-481-5743	1	PAODD
2	Nut, Self-Locking, Wing	96906	MS51553-420	5310-01-384-2546	4	PAOZZ
3	Spacer, Aluminum	57177	10705AL315C		4	PAOZZ
4	Bolt, Square Neck	96906	MS35751-17	5306-00-889-2943	4	PAOZZ
--	Assembly, Lock DU	0J198	872843-1		1	XBOOO
--	Bracket, Locking	0J198	861871-3		1	XBOZZ
--	Washer, Lock	96906	MS35338-42	5310-00-045-3299	2	PAOZZ
--	Screw	80205	MS35190-253	5305-00-059-4568	2	PAOZZ

W–6.10 REMOVE/REPLACE RAM-BALL ASSEMBLY

Refer to Figure W-8.

NOTE

Ground straps are attached to components at one end (PU and DU) and a frame ground at the other end. Regardless of where the ground strap terminates, it is usually a burnished (void of paint) area. If the ground strap is removed from a burnished area, make sure to return it to the same burnished area. Where applicable, always connect the ground strap first when assembling, and disconnect the ground strap last when disassembling.

W–6.10.1 REMOVE RAM-BALL ASSEMBLY

WARNING

Before conducting maintenance involving the removal and replacement of system components, ensure that all power to the FBCB2 system is off (including power from the vehicle). Failure to comply with warning may result in equipment damage or injury to personnel.

a. Power down AN/UYK-128(V) system IAW Operator's Manual TM 11-7010-326-10, or Pocket Guide TB 11-7010-326-10.

b. Remove DU IAW Unit Maintenance Manual TM 11-7010-326-20&P, Chapter 2.

NOTE

Note cable routing and tie-wrap locations before removing cable or tie-wraps.

c. Remove tie-wraps securing W2 display cable and ground strap to DU isolation assembly using diagonal wire cutters.

d. Loosen RAM-Ball knob while supporting DU isolation assembly until RAM-Ball display base with ball can be lifted free of RAM-Ball socket arm.

e. Remove four self-locking wing nuts (2), spacers (3), and square neck bolts (5) from RAM-Ball display base with ball and DU isolation assembly bottom plate.

f. Remove RAM-Ball socket arm from RAM-Ball mounting base with ball on table.

g. Remove three hex nuts (8), lock washers (7), flat washers (6), and flat head screws (4) from RAM-Ball mounting base with ball under table using a No. 3 cross-tip screwdriver and 7/16" socket with ratchet.

W–6.10.2 REPLACE RAM-BALL ASSEMBLY

a. Align three holes in RAM-Ball mounting base with ball with table installation holes.

b. Install three flat head screws (4), flat washers (6), lock washers, (7) and hex nuts (8) under table to secure RAM-Ball mounting base using a No. 3 cross-tip screwdriver and 7/16” socket with ratchet.

CAUTION

Ensure RAM-Ball is free of dirt and contaminants before reassembling. Failure to comply can result in slippage or excess wear of RAM-Ball assembly.

c. Inspect and clean RAM-Ball socket arm, display and mounting base with ball, as necessary, using clean lint-free wipes.

d. Install RAM-Ball socket arm on RAM-Ball mounting base with ball.

e. Align four holes in RAM-Ball display base with ball with slots in DU isolation assembly bottom plate.

f. Install four square neck bolts (5), spacers (3), and self-locking wing nuts (2) to secure DU isolation assembly bottom plate to RAM-Ball display base with ball.

g. Insert RAM-Ball display base with ball into RAM-Ball socket arm.

h. Adjust viewing angle and tighten RAM-Ball knob.

i. Install DU IAW Unit Maintenance Manual TM 11-7010-326-20&P, Chapter 2.

j. Secure W2 display cable and ground strap to DU isolation assembly using tie-wraps.

k. Dress tie-wraps using diagonal wire cutters.

l. Perform Functional Check IAW paragraph W–6.1.

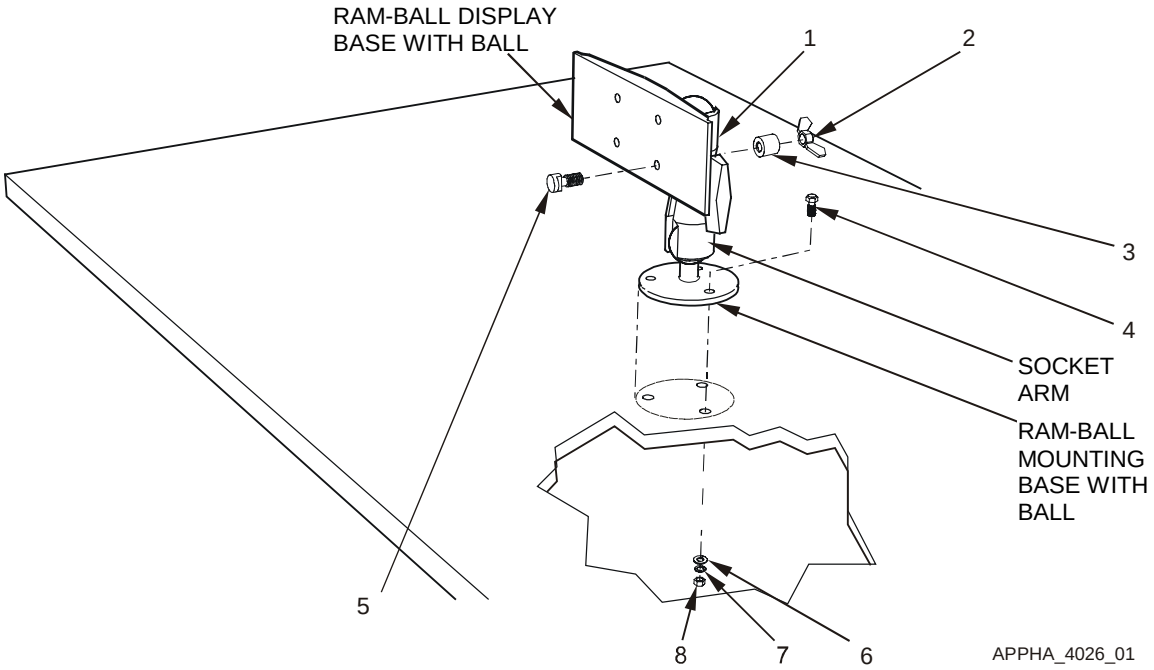

Figure W-8. Remove and Replace RAM-Ball Assembly

Key and Parts List for Figure W-8

ITEM NO.	NOMENCLATURE	CAGE CODE	PART NUMBER	NSN	QTY	SMR
1	Mount, RAM-Ball	0J198	889489-1		1	PAOZZ
2	Nut, Self-Locking, Wing	96906	MS51553-420	5310-01-384-2546	4	PAOZZ
3	Spacer, Aluminum	57177	10705AL315C		4	PAOZZ
4	Screw, Flat Head	96906	MS35190-296	5305-00-957-6642	3	PAOZZ
5	Bolt, Square Neck	96906	MS35751-17	5306-00-889-2943	4	PAOZZ
6	Washer, Flat	96906	MS27183-10	5310-00-809-4058	3	PAOZZ
7	Washer, Lock	96906	MS35338-44	5310-00-582-5965	3	PAOZZ
8	Nut, Plain, Hexagon	10110	MS51967-2	5310-01-291-3389	3	PAOZZ

W–6.11 REMOVE/REPLACE KEYBOARD UNIT (KU) STOWAGE BOX

Refer to Figure W-9.

W–6.11.1 REMOVE KEYBOARD UNIT (KU) STOWAGE BOX

a. Remove keyboard from stowage box, if stowed.

b. Loosen four KU stowage box captive screws until the captive screws move freely using a No. 2 cross-tip screwdriver.

c. Remove KU stowage box (1) from PU.

W–6.11.2 REPLACE KEYBOARD UNIT (KU) STOWAGE BOX

a. Align four KU stowage box captive screws with PU installation holes.

b. Tighten four captive screws using a No. 2 cross-tip screwdriver.

c. Stow keyboard, if necessary.

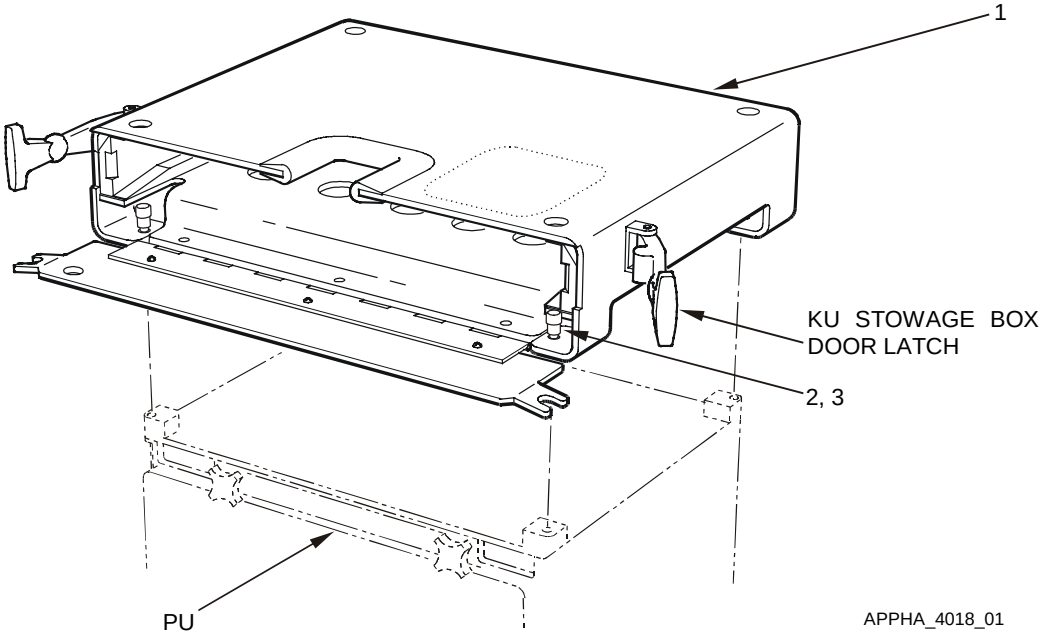

Figure W-9. Remove and Replace Keyboard Unit (KU) Stowage Box

Key and Parts List for Figure W-9

ITEM NO.	NOMENCLATURE	CAGE CODE	PART NUMBER	NSN	QTY	SMR
1	Box, KU Stowage	0J198	872845-1	2540-01-481-5744	1	PAODD
2	Screw, Captive Panel	57177	PH207-05SS1032		4	PAOZZ
3	Retainer, Panel Screw	57177	214-03SS10-32		4	PAOZZ
--	Case, Keyboard	0J198	872845-11		1	XBOOO
--	Label, Keyboard Box	0J198	881323-1		1	PAOZZ
--	Rubber Edge Trim	39428	8507K16	5325-01-435-2840	9	PAOZZ
--	Bottom, Stowage Box	0J198	872845-12		1	XBOOO
--	Side Rail, Keybd Box	0J198	872845-13		1	XBOOO
--	Side Rail, Keybd Box	0J198	872845-14		1	XBOOO
--	Door, Keyboard Box	0J198	872845-15		1	XBOOO
--	Hinge, Keyboard Box	0J198	872845-16		1	XBOOO
--	Strip, Rubber	0J198	872845-17		1	XBOOO
--	Rivet, Solid, Csk	96906	MS20426AD-4-5	5320-00-117-6950	6	PAOZZ
--	Screw, Pan Head	96906	MS35206-229	5305-00-984-4989	14	PAOZZ
--	Washer, Flat	96906	MS27183-5	5310-00-983-8483	16	PAOZZ
--	Washer, Lock	96906	MS35338-41	5310-00-045-4007	13	PAOZZ
--	Nut, Plain	96906	MS35649-262	5310-00-934-9747	3	PAOZZ
--	Adhesive	04963	SCOTCH-GRIP RUB	8040-00-664-4318	1	PAOZZ
--	Grip, Handle Assembly	0J198	861867-1		1	XBOOO
--	Grip, Handle	0J198	861869-1		1	XBOZZ
--	Screw, Machine	96906	MS35206-228	5305-00-984-4988	4	PAOZZ
--	Washer, Lock	96906	MS35338-41	5310-00-045-4007	4	PAOZZ
--	Tape, Shielding, Elect	39428	7648A34		1	XBOZZ

W–6.12 REMOVE/REPLACE KEYBOARD UNIT (KU) STOWAGE BOX DOOR LATCHES

Refer to Figure W-10.

W–6.12.1 REMOVE KEYBOARD UNIT (KU) STOWAGE BOX DOOR LATCHES

a. Pull rubber T-handles and unfasten KU stowage box door latches, if necessary.

b. Remove two pan head screws (1), lock washers (2) and flat washers (3) from each KU stowage box door latch (4) using a No. 2 cross-tip screwdriver.

c. Remove KU stowage box door latch (4).

W–6.12.2 REPLACE KEYBOARD UNIT (KU) STOWAGE BOX DOOR LATCHES

NOTE

The same KU stowage box door latch part is used for each side of the keyboard stowage box. Position the bumper that is on one side of the latch so that it is toward the side of the keyboard stowage box when fastened.

a. Align KU stowage box door latch mounting holes with mounting holes in KU stowage box.

b. Install and tighten two pan head screws (1), lock washers (2) and flat washers (3) for each KU stowage box door latch (4), using a No. 2 cross-tip screwdriver.

c. Pull rubber T-handles and fasten KU stowage box door latches.

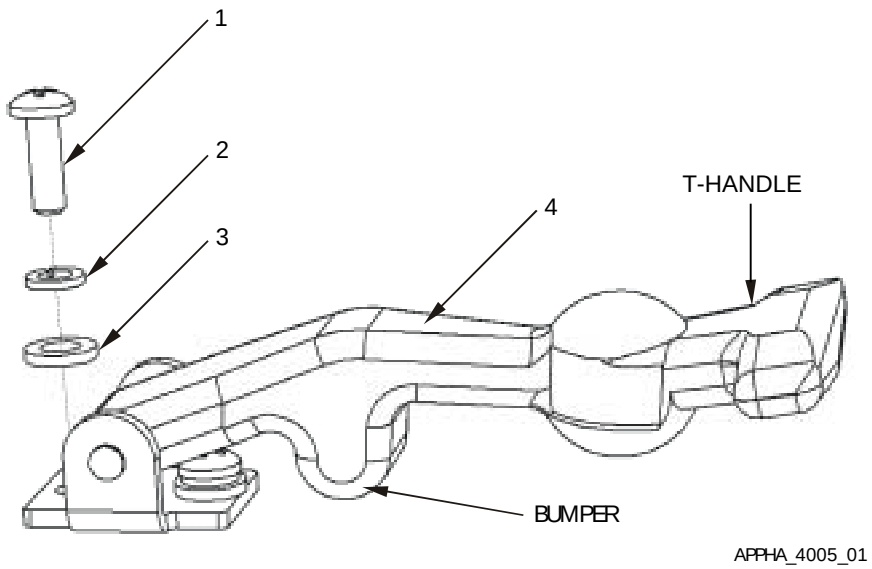

Figure W-10. Remove and Replace Keyboard Unit (KU) Stowage Box Door Latches

Key and Parts List for Figure W-10

ITEM NO.	NOMENCLATURE	CAGE CODE	PART NUMBER	NSN	QTY	SMR
1	Screw, Pan Head	96906	MS35206-229	5305-00-984-4989	4	PAOZZ
2	Washer, Lock	96906	MS35338-41	5310-00-045-4007	4	PAOZZ
3	Washer, Flat	96906	MS27183-5	5310-00-983-8483	4	PAOZZ
4	(KU stowage box door latch) Latch, Thumb	94222	37-20-071-20	5340-01-351-3340	2	PAOZZ

This page intentionally left blank.

APPENDIX X

SUPPLEMENTARY INFORMATION FOR

M1068 FIRE DIRECTION CONTROL VEHICLE

TABLE OF CONTENTS

Page
X–1 GENERAL X–3
X–2 COMPONENT PART NUMBERS X–3
X–3 SYSTEM INTERFACES X–4
X–3.1 MECHANICAL X–4
X–3.2 CABLE INTERFACES X–4
X–4 COMPONENT LOCATION X–6
X–4.1 GENERAL LOCATION X–6
X–4.2 MOUNTING X–7
X–5 PLATFORM-UNIQUE TROUBLESHOOTING X–8
X–6 REMOVAL/REPLACEMENT IN THE PLATFORM X–8
X–6.1 FUNCTIONAL CHECK X–8
X–6.2 REMOVE/REPLACE W1 POWER CABLE X–9
X–6.3 REMOVE/REPLACE W2 DISPLAY CABLE X–10
X–6.4 REMOVE/REPLACE W3 SERIAL INTERFACE ADAPTER DEVICE (SIAD) X–11
X–6.5 REMOVE/REPLACE W3P PLGR CABLE X–12
X–6.6 REMOVE/REPLACE W3N INC CABLE X–13
X–6.7 REMOVE/REPLACE W4 AUDIO CABLE X–14
X–6.8 REMOVE/REPLACE PU ISOLATION ASSEMBLY X–16
X–6.9 REMOVE/REPLACE DU ISOLATION ASSEMBLY X–19
X–6.10 REMOVE/REPLACE RAM-BALL ASSEMBLY X–22
X–6.11 REMOVE/REPLACE KEYBOARD UNIT (KU) STOWAGE BOX X–24
X–6.12 REMOVE/REPLACE KEYBOARD UNIT (KU) STOWAGE BOX DOOR LATCHES X–26

LIST OF ILLUSTRATIONS

Page
Figure X-1. Equipment Interface Block Diagram X–5
Figure X-2. Relative Component Locations X–6
Figure X-3. M1068 FDCV Equipment Mounting - Forward View X–7
Figure X-4. M1068 FDCV Equipment Mounting - Curbside View X–7
Figure X-5. Cable Run X–15
Figure X-6. Remove and Replace PU Isolation Assembly X–18
Figure X-7. Remove and Replace DU Isolation Assembly and Ram-Ball Assembly X–21
Figure X-8. Remove and Replace Keyboard Unit (KU) Stowage Box X–24
Figure X-9. Remove and Replace Keyboard Unit (KU) Stowage Box Door Latches X–27

X–1 GENERAL

This appendix describes the interfaces between the FBCB2 equipment and the M1068 Fire Direction Control Vehicle (FDCV). This Appendix also identifies the component parts of the M1068 FDCV platform installation kit and details the removal and replacement procedures particular to the M1068 FDCV.

X–2 COMPONENT PART NUMBERS

Key and Parts List tables contained in the Removal and Replacement section of this Appendix serve a dual purpose. Use the Item Numbers in the Key to identify components and attaching hardware shown in the Figures illustrating the tasks. The nomenclature and part number for the hardware and equipment mounting components of the installation kit also are keyed to the Item Numbers in the tables. Additional parts ordering information, such as Contractor and Government Entity code (CAGE); National Stock Number (NSN); quantity; and Source, Maintenance and Recoverability (SMR) codes, are provided. The Key and Parts List follow the task illustrations.

X–3 SYSTEM INTERFACES

X–3.1 MECHANICAL

The mechanical hardware-to-hardware interfaces include:

a. Cables

b. Processor Unit (PU)

c. Display Unit (DU)

d. Keyboard Unit (KU)

X–3.2 CABLE INTERFACES

Figure X-1 illustrates a block diagram of the interface between FBCB2 equipment and the M1068 FDCV (Platform). Figure X-1 also illustrates the signal and control interfaces along with the terminal connector labels (e.g., P1, P2). The purpose of each cable is listed below:

Cable Name	Purpose
W1–Cable	Supplies vehicle power to the AN/UYK-128(V) computer and its subassemblies.
W2–Cable	Supplies power and signals to the Display Unit (DU) and Keyboard Unit (KU). Returns Man Machine Interface (MMI) information from the KU to the Processor Unit (PU).
W3–Cable	The Serial Interface Adapter Device (SIAD) is a conduit assembly that breaks out each of the serial interface ports to a connector.
W3P–Cable	Collects position and time information from the PLGR.
W3N–Cable	Provides duplex communication between the PU, Internet Controller (INC) and radios.
W4–Cable	Connects audio signals from PU to the Intercom system and Combat Vehicle Crew (CVC) Helmet.
W5–Cable	The Expansion Interface Adapter Device (EIAD) is connected to the Universal Serial Bus (USB) connector only when this vehicle is to be used in a Tactical Operations Center (TOC) setup. When used in this configuration, the EIAD is connected between the PU J5 connector and local router.
Ground Strap	Provides safety ground for the PU.
Ground Strap	Provides safety ground for the DU.

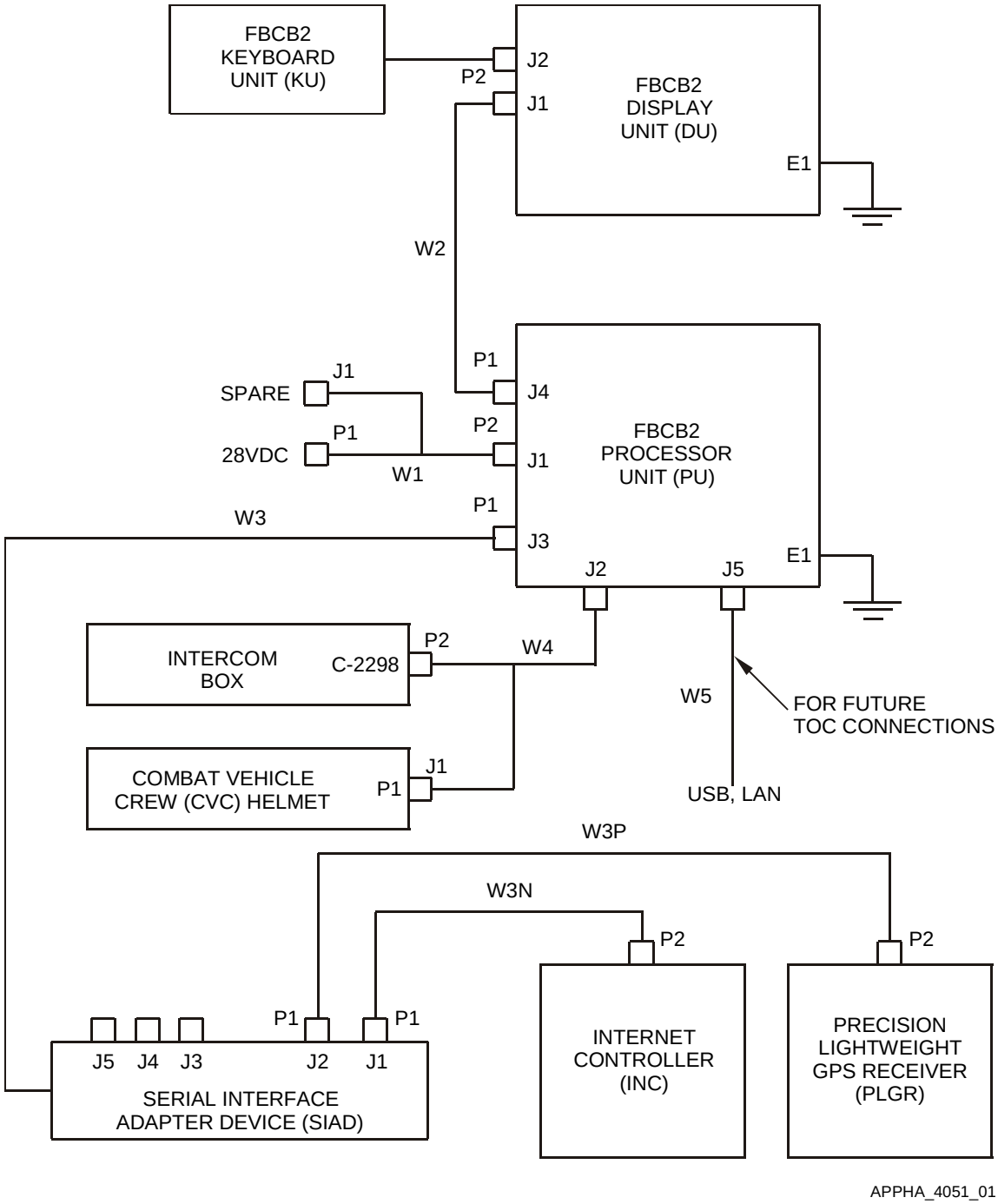

Figure X-1. Equipment Interface Block Diagram

X–4 COMPONENT LOCATION

X–4.1 GENERAL LOCATION

Figure X-2 shows the relative locations of the FBCB2 equipment and mounting location perspective for the FDCV vehicle configuration.

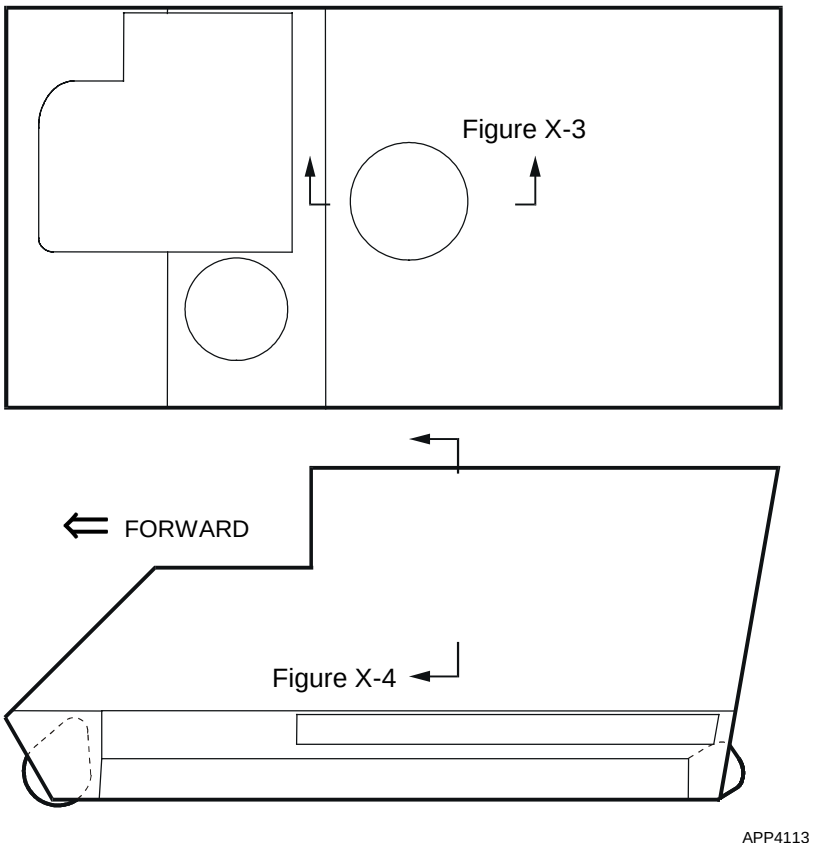

Figure X-2. Relative Component Locations

X–4.2 MOUNTING

Figure X-3 shows the equipment mounting location looking forward. Figure X-4 shows the equipment mounting location looking curbside from the cargo area.

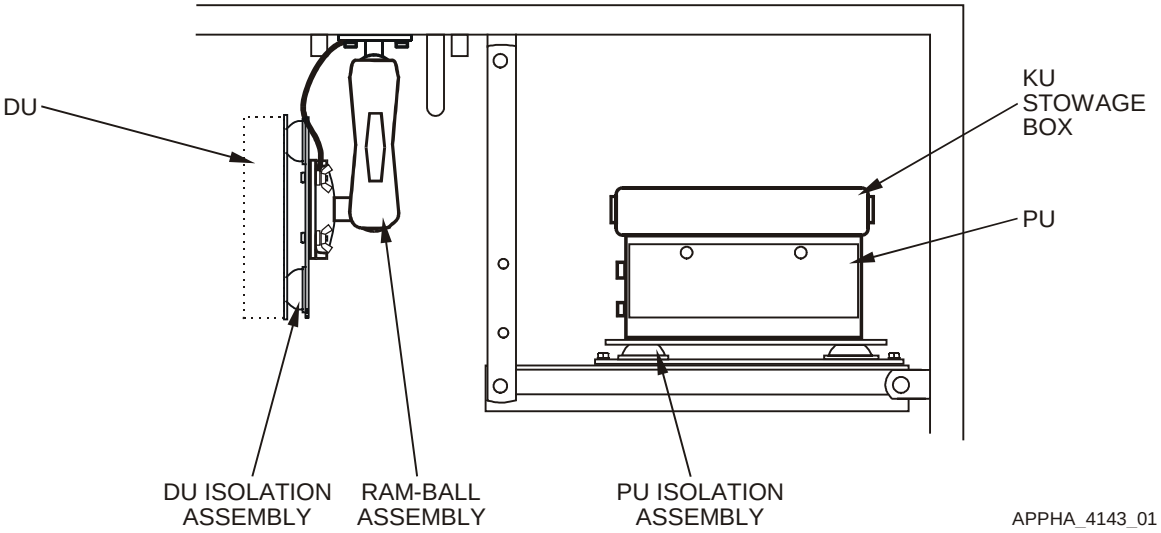

Figure X-3. M1068 FDCV Equipment Mounting - Forward View

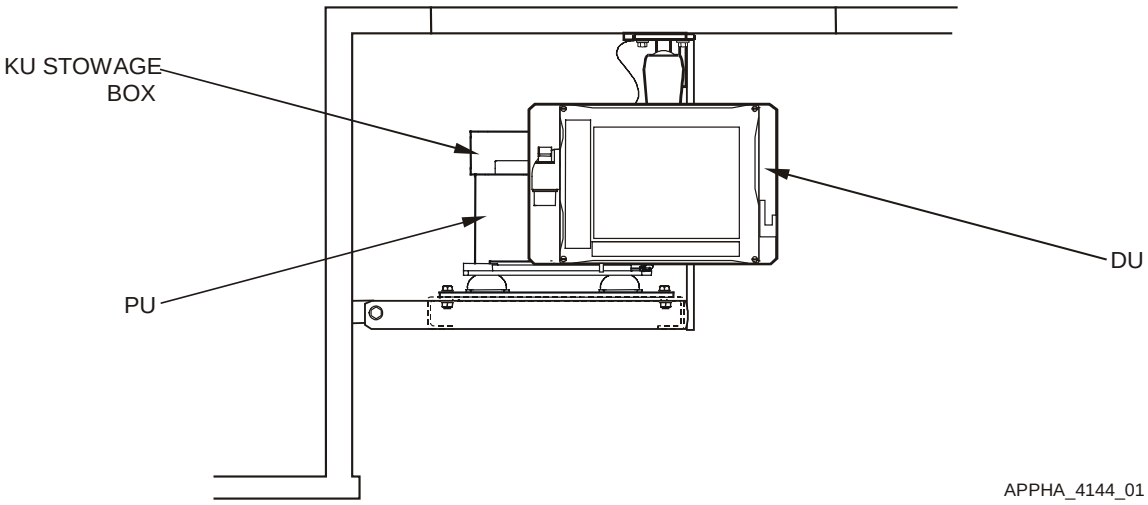

Figure X-4. M1068 FDCV Equipment Mounting - Curbside View

X–5 PLATFORM-UNIQUE TROUBLESHOOTING

No unique troubleshooting procedures are required for this vehicle.

X–6 REMOVAL/REPLACEMENT IN THE PLATFORM

Most installations must be tailored to the platform. Cables and brackets are unique to the installation. Before a part or assembly is removed from a vehicle, fill out a “Maintenance Request” DA Form 2407. One copy of this completed form must remain with the vehicle and the remaining copies must be kept with the failed component. To prove the operability of the system after an item is replaced, perform the system Functional Check.

X–6.1 FUNCTIONAL CHECK

X–6.1.1 POWER UP

Power up and initialize all interface equipment and the AN/UYK-128(V) In Accordance With (IAW) Operator’s Manual TM 11-7010-326-10, or Pocket Guide TB 11-7010-326-10.

X–6.1.2 VERIFICATION

NOTE

Observe that the Display Unit PWR, DISP and CPU green LED lights are lit.

a. Observe that the PLGR synchronizes with PU, indicated by the PLGR dialog box showing green.

b. Observe that the Router synchronizes with the PU, indicated by the Router dialog box showing green.

c. At the Session Manager screen, select OPS button to display the OPS screen.

d. Verify the GPS status is either green or amber on the Classification/Status Bar.

e. Verify the Communications status is either green or amber on the Classification/Status Bar.

X–6.1.3 POWER DOWN

Power down all interface equipment and the AN/UYK-128(V) IAW the Operator’s Manual TM 11-7010-326-10, or Pocket Guide TB 11-7010-326-10.

X–6.2 REMOVE/REPLACE W1 POWER CABLE

Refer to Figure X-5.

X–6.2.1 REMOVE W1 POWER CABLE

WARNING

Before conducting maintenance involving the removal and replacement of system components, ensure that all power to the FBCB2 system is off (including power from the vehicle). Failure to comply with warning may result in equipment damage or injury to personnel.

a. Power down AN/UYK-128(V) system IAW Operator's Manual TM 11-7010-326-10, or Pocket Guide TB 11-7010-326-10.

b. Power down SINCGARS IAW TM 11-5820-890-10-8.

c. Release and slide SINCGARS Vehicular Amplifier-Adapter (VAA) (AM 7239/VRC) forward from Mounting Base (MB) (MT-6352/VRC) IAW TM 11-5820-890-10-8.

d. Disconnect W1-P1 cable connector from SINCGARS MB A4-J2 connector.

e. Disconnect W1-J1 cable connector from power interface cable (if applicable).

f. Disconnect W1-P2 cable connector from PU J1 connector.

g. Install protective cap on PU J1 connector.

NOTE

Note cable routing and tie-wrap locations before removing cable or tie-wraps.

h. Remove tie-wraps securing W1 cable using diagonal wire cutters.

i. Remove W1 power cable (2).

X–6.2.2 REPLACE W1 POWER CABLE

a. Route W1 power cable (2).

b. Remove protective cap from PU J1 connector.

c. Connect W1-P2 cable connector to PU J1 connector.

d. Connect W1-J1 cable connector to power interface cable (if applicable).

e. Connect W1-P1 cable connector to SINCGARS Mounting Base (MB) (MT-6352A/VRC) A4-J2 connector.

f. Secure W1 cable using tie-wraps, as applicable.

g. Dress tie-wraps using diagonal wire cutters.

h. Slide SINCGARS Vehicular Amplifier-Adapter (VAA) (AM 7239/VRC) back into SINCGARS MB and fasten IAW TM 11-5820-890-10-8.

i. Perform Functional Check IAW paragraph X–6.1.

X–6.3 REMOVE/REPLACE W2 DISPLAY CABLE

Refer to Figure X-5.

X–6.3.1 REMOVE W2 DISPLAY CABLE

WARNING

Before conducting maintenance involving the removal and replacement of system components, ensure that all power to the FBCB2 system is off (including power from the vehicle). Failure to comply with warning may result in equipment damage or injury to personnel.

a. Power down AN/UYK-128(V) system IAW Operator's Manual TM 11-7010-326-10, or Pocket Guide TB 11-7010-326-10.

b. Disconnect W2-P1 cable connector from PU J4 connector.

c. Install protective cap on PU J4 connector.

d. Disconnect W2-P2 cable connector from display J1 connector.

e. Install protective cap on display J1 connector.

NOTE

Note cable routing and tie-wrap locations before removing cable or tie-wraps.

f. Remove tie-wraps from W2 cable and ground strap using diagonal wire cutters.

g. Remove W2 display cable (1).

X–6.3.2 REPLACE W2 DISPLAY CABLE

a. Route W2 display cable (1).

b. Remove protective cap from display J1 connector.

c. Connect W2-P2 cable connector to display J1 connector.

d. Remove protective cap from PU J4 connector.

e. Connect W2-P1 cable connector to PU J4 connector.

f. Secure W2 cable and ground strap using tie-wraps.

g. Dress tie-wraps using diagonal wire cutters.

h. Perform Functional Check IAW paragraph X–6.1.

X–6.4 REMOVE/REPLACE W3 SERIAL INTERFACE ADAPTER DEVICE (SIAD)

Refer to Figure X-5.

X–6.4.1 REMOVE W3 SERIAL INTERFACE ADAPTER DEVICE (SIAD)

WARNING

Before conducting maintenance involving the removal and replacement of system components, ensure that all power to the FBCB2 system is off (including power from the vehicle). Failure to comply with warning may result in equipment damage or injury to personnel.

a. Power down AN/UYK-128(V) system IAW Operator's Manual TM 11-7010-326-10, or Pocket Guide TB 11-7010-326-10.

b. Disconnect W3N-P1 cable connector from W3 SIAD J1 connector.

c. Disconnect W3P-P1 cable connector from W3 SIAD J2 connector.

d. Disconnect W3 SIAD-P1 cable connector from PU J3 connector.

e. Install protective cap on PU J3 connector.

NOTE

Note cable routing and tie-wrap locations before removing cable or tie-wraps.

f. Remove tie-wraps securing W3 SIAD using diagonal wire cutters.

g. Remove W3 SIAD (6).

X–6.4.2 REPLACE W3 SERIAL INTERFACE ADAPTER DEVICE (SIAD)

a. Route W3 SIAD (6) into original position.

b. Remove protective cap from PU J3 connector.

c. Connect W3 SIAD-P1 cable connector to PU J3 connector.

d. Connect W3P-P1 cable connector to W3 SIAD J2 connector.

e. Connect W3N-P1 cable connector to W3 SIAD J1 connector.

f. Secure W3 SIAD using tie-wraps.

g. Dress tie-wraps using diagonal wire cutters.

h. Perform Functional Check IAW paragraph X–6.1.

X–6.5 REMOVE/REPLACE W3P PLGR CABLE

Refer to Figure X-5.

X–6.5.1 REMOVE W3P PLGR CABLE

WARNING

Before conducting maintenance involving the removal and replacement of system components, ensure that all power to FBCB2 system is off (including power from the vehicle). Failure to comply with warning may result in equipment damage or injury to personnel.

a. Power down AN/UYK-128(V) system IAW Operator's Manual TM 11-7010-326-10, or Pocket Guide TB 11-7010-326-10.

b. Disconnect W3P-P1 cable connector from W3 SIAD J2 connector.

c. Unfasten over-center latch and lift PLGR from mounting rack.

d. Disconnect W3P-P2 cable connector from PLGR J2 connector using an offset flat-tip screwdriver.

NOTE

Note cable routing and tie-wrap locations before removing cable or tie-wraps.

e. Remove tie-wraps securing W3P cable using diagonal wire cutters.

f. Remove W3P cable (4).

X–6.5.2 REPLACE W3P PLGR CABLE

a. Route W3P cable (4).

b. Connect W3P-P2 cable connector to PLGR J2 connector using an offset flat-tip screwdriver.

c. Install PLGR in mounting rack and fasten over-center latch.

d. Connect W3P-P1 cable connector to W3 SIAD J2 connector.

e. Secure W3P cable using tie-wraps.

f. Dress tie-wraps using diagonal wire cutters.

g. Perform Functional Check IAW paragraph X–6.1.

X–6.6 REMOVE/REPLACE W3N INC CABLE

Refer to Figure X-5.

X–6.6.1 REMOVE W3N INC CABLE

WARNING

Before conducting maintenance involving the removal and replacement of system components, ensure that all power to the FBCB2 system is off (including power from the vehicle). Failure to comply with warning may result in equipment damage or injury to personnel.

a. Power down AN/UYK-128(V) system IAW Operator's Manual TM 11-7010-326-10, or Pocket Guide TB 11-7010-326-10.

b. Disconnect W3N-P1 cable connector from W3 SIAD J1 connector.

c. Disconnect W3N-P2 cable connector from SINCGARS INC J6 connector.

NOTE

Note cable routing and tie-wrap locations before removing cable or tie-wraps.

d. Remove tie-wraps securing W3N cable using diagonal cutters.

e. Remove W3N cable (3).

X–6.6.2 REPLACE W3N INC CABLE

a. Route W3N cable (3).

b. Connect W3N-P2 cable connector to SINCGARS INC J6 connector.

c. Connect W3N-P1 cable connector to W3 SIAD J1 connector.

d. Secure W3N cable using tie-wraps.

e. Dress tie-wraps using diagonal wire cutters.

f. Perform Functional Check IAW paragraph X–6.1.

X–6.7 REMOVE/REPLACE W4 AUDIO CABLE

Refer to Figure X-5.

X–6.7.1 REMOVE W4 AUDIO CABLE

WARNING

Before conducting maintenance involving the removal and replacement of system components, ensure that all power to the FBCB2 system is off (including power from the vehicle). Failure to comply with warning may result in equipment damage or injury to personnel.

a. Power down AN/UYK-128(V) system IAW Operator's Manual TM 11-7010-326-10, or Pocket Guide TB 11-7010-326-10.

b. Disconnect W4-P1 cable connector from PU J2 connector.

c. Install protective cap on PU J2 connector.

d. Disconnect W4-P2 cable connector from Intercom Box C-2298 connector.

e. Disconnect W4-J1 cable connector from Combat Vehicle Crew (CVC) helmet P1 connector.

NOTE

Note cable routing and tie-wrap locations before removing cable or tie-wraps.

f. Remove tie-wraps securing W4 cable using diagonal wire cutters.

g. Remove W4 audio cable (5).

X–6.7.2 REPLACE W4 AUDIO CABLE

a. Route W4 audio cable (5).

b. Connect W4-J1 cable connector to CVC helmet P1 connector.

c. Connect W4-P2 cable connector to Intercom Box C-2298 connector.

d. Remove protective cap from PU J2 connector.

e. Connect W4-P1 cable connector to PU J2 connector.

f. Secure W4 cable using tie-wraps.

g. Dress tie-wraps using diagonal wire cutters.

h. Perform Functional Check IAW paragraph X–6.1.

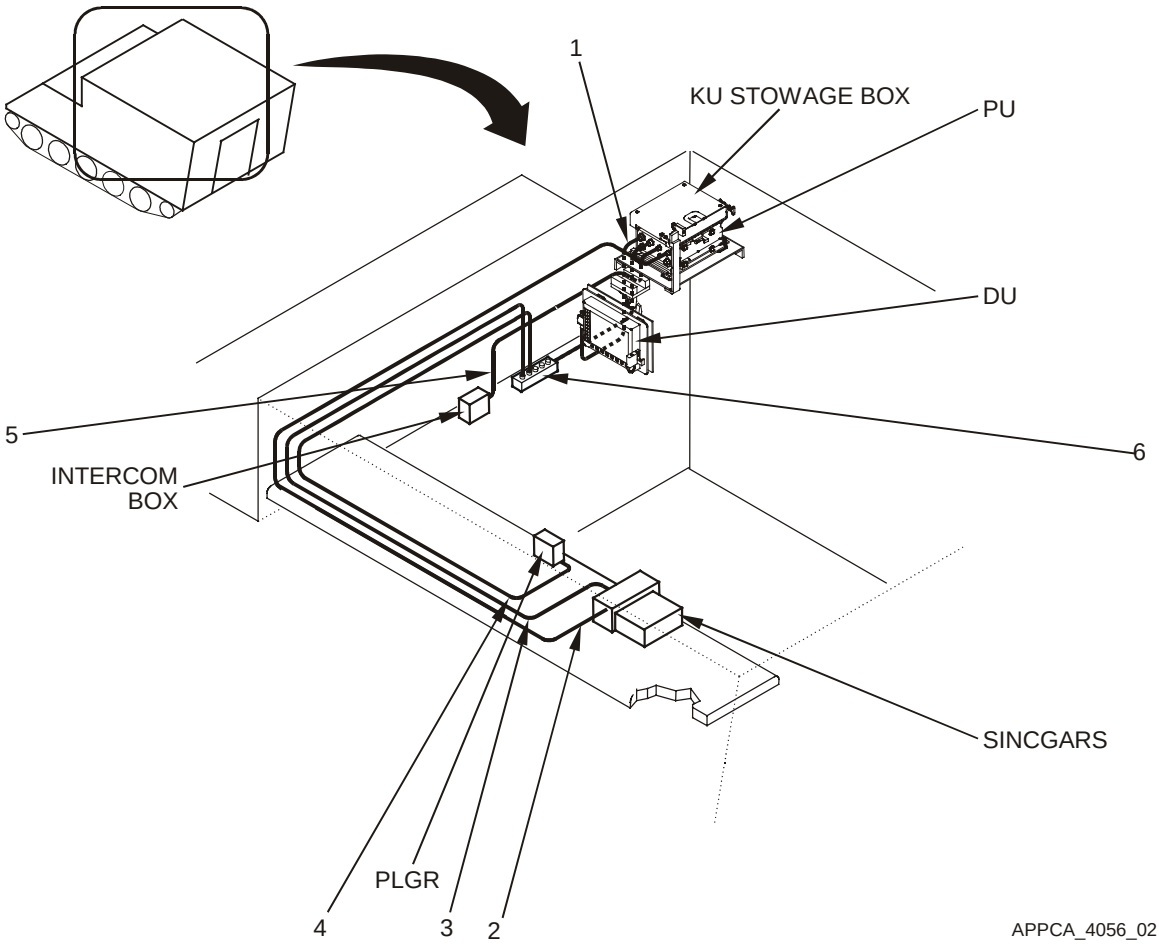

Figure X-5. Cable Run

Key and Parts List for Figure X-5

ITEM NO.	NOMENCLATURE	CAGE CODE	PART NUMBER	NSN	QTY	SMR
1	Cable Assembly W2	0J198	881327-1	5995-01-478-4876		PAODD
2	Cable Assembly W1	0J198	861880-1	5995-01-478-4776		PAODD
3	Cable Assembly W3N	0J198	881336-1	5995-01-478-4913		PAODD
4	Cable Assembly W3P	0J198	881335-3	5995-01-478-4898		PAODD
5	Cable Assembly W4	0J198	881270-1	5995-01-478-4924		PAODD
6	Adapter Assy SIAD W3	0J198	881331-1	4920-01-478-3722		PAODD
--	Strap, Tie Down, Elect	39428	7130K31		A/R	PAOZZ

X–6.8 REMOVE/REPLACE PU ISOLATION ASSEMBLY

Refer to Figure X-6.

NOTE

Ground straps are attached to components at one end (PU and DU) and a frame ground at the other end. Regardless of where the ground strap terminates, it is usually a burnished (void of paint) area. If the ground strap is removed from a burnished area, make sure to return it to the same burnished area. Where applicable, always connect the ground strap first when assembling, and disconnect the ground strap last when disassembling.

X–6.8.1 REMOVE PU ISOLATION ASSEMBLY

WARNING

Before conducting maintenance involving the removal and replacement of system components, ensure that all power to the FBCB2 system is off (including power from the vehicle). Failure to comply with warning may result in equipment damage or injury to personnel.

a. Power down AN/UYK-128(V) system IAW Operator's Manual TM 11-7010-326-10, or Pocket Guide TB 11-7010-326-10.

NOTE

Do not remove the Removable Hard Disk Drive Cartridge (RHDDC), locking bracket, or KU unit stowage box from PU.

b. Remove PU IAW Unit Maintenance Manual TM 11-7010-326-20&P, Chapter 2.

c. Remove one hex head screw (2), flat washer (3), ground strap, flat washer (3), lock washer (4) and hex nut (5) from PU isolation assembly (1) bottom plate and mounting bracket using a 7/16" socket with ratchet and 7/16" open-end wrench.

d. Remove remaining three hex head screws (2), flat washers (3), lock washers (4) and hex nuts (5) from PU isolation assembly (1) bottom plate and mounting bracket using a 7/16" socket with ratchet and 7/16" open-end wrench.

e. Remove PU isolation assembly (1) from mounting bracket.

X–6.8.2 REPLACE PU ISOLATION ASSEMBLY

a. Align four PU isolation assembly (1) bottom plate holes with mounting bracket holes.

NOTE

To ensure positive ground, PU ground strap must make direct contact with bare metal. Ensure PU ground strap is installed in its original location at the PU isolation assembly bottom plate mounting hole. Slip the ground strap, flat washer and lock washer on the mounting screw before installing and tightening nut.

b. Install one hex head screw (2), flat washer (3), ground strap, flat washer (3), lock washer (4) and hex nut (5) on PU isolation assembly (1) bottom plate and mounting bracket using a 7/16” socket with ratchet and 7/16” open-end wrench.

c. Install remaining three hex head screws (2), flat washers (3), lock washers (4) and hex nuts (5) on PU isolation assembly (1) bottom plate and mounting bracket using 7/16” socket with ratchet and 7/16” open-end wrench.

d. Install PU IAW Unit Maintenance Manual TM 11-7010-326-20&P, Chapter 2.

e. Perform Functional Check IAW paragraph X–6.1.

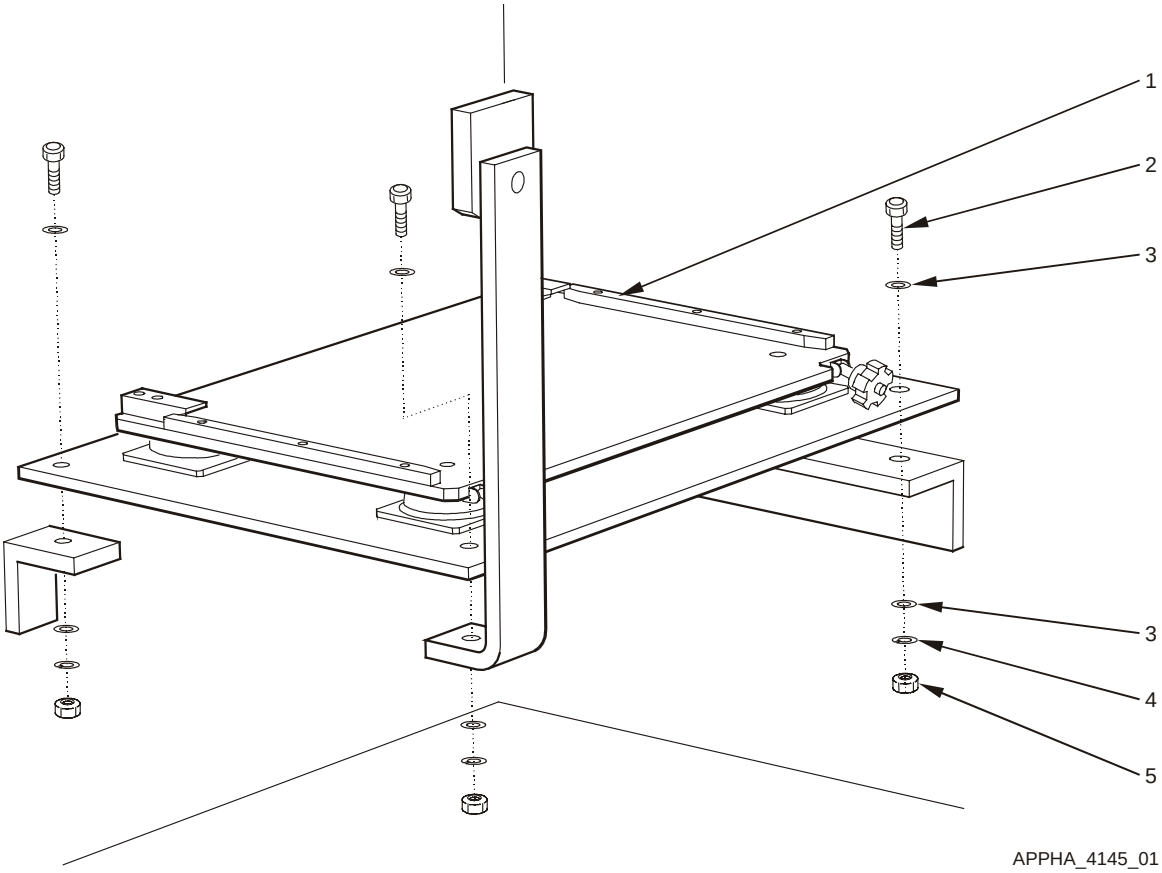

Figure X-6. Remove and Replace PU Isolation Assembly

Key and Parts List for Figure X-6

ITEM NO.	NOMENCLATURE	CAGE CODE	PART NUMBER	NSN	QTY	SMR
1	(PU isolation assembly) Plate, Resilient Mount PU	0J198	872826-1	5340-01-481-5742	1	PAODD
2	Screw, Cap, Hex Head	80204	B1821AH025C088N	5305-01-389-8787	4	PAOZZ
3	Washer, Flat	96906	MS27183-10	5310-00-809-4058	8	PAOZZ
4	Washer, Lock	96906	MS35333-40	5310-00-550-1130	4	PAOZZ
5	Nut, Plain, Hexagon	10110	MS51967-2	5310-01-291-3389	4	PAOZZ
--	Assembly, PU Lock	0J198	861865-1		1	XBOOO
--	Bracket, Locking	0J198	861871-1		1	XBOZZ
--	Screw	80205	MS35190-253	5305-00-059-4568	2	PAOZZ

X–6.9 REMOVE/REPLACE DU ISOLATION ASSEMBLY

Refer to Figure X-7.

NOTE

Ground straps are attached to components at one end (PU and DU) and a frame ground at the other end. Regardless of where the ground strap terminates, it is usually a burnished (void of paint) area. If the ground strap is removed from a burnished area, make sure to return it to the same burnished area. Where applicable, always connect the ground strap first when assembling, and disconnect the ground strap last when disassembling.

X–6.9.1 REMOVE DU ISOLATION ASSEMBLY

WARNING

Before conducting maintenance involving the removal and replacement of system components, ensure that all power to the FBCB2 system is off (including power from the vehicle). Failure to comply with warning may result in equipment damage or injury to personnel.

a. Power down AN/UYK-128(V) system IAW Operator's Manual TM 11-7010-326-10, or Pocket Guide TB 11-7010-326-10.

b. Remove DU IAW Unit Maintenance Manual TM 11-7010-326-20&P, Chapter 2.

NOTE

Note cable routing and tie-wrap locations before removing cable or tie-wraps.

c. Remove tie-wraps securing W2 display cable and ground strap to DU isolation assembly using diagonal wire cutters.

d. Remove one self-locking wing nut (8), safety lanyard (4), spacer (9) and square neck bolt (10) from RAM-Ball display base with ball and DU isolation assembly (1) bottom plate.

CAUTION

Ensure support is provided to display while loosening RAM-Ball knob. Failure to comply could result in display falling from RAM-Ball mount causing equipment damage.

e. Loosen RAM-Ball knob while supporting DU isolation assembly (1) until RAM-Ball display base with ball can be lifted free of RAM-Ball socket arm.

f. Remove remaining three self-locking wing nuts (8), spacers (9) and square neck bolts (10) from RAM-Ball display base with ball and DU isolation assembly (1) bottom plate.

g. Remove DU isolation assembly (1) from RAM-Ball display base.

X–6.9.2 REPLACE DU ISOLATION ASSEMBLY

a. Align four RAM-Ball display base with ball installation holes with slots in DU isolation assembly (1) bottom plate.

b. Install three square neck bolts (10), spacers (9) and self-locking wing nuts (8) to secure RAM-Ball display base with ball to DU isolation assembly (1) bottom plate.

CAUTION

Ensure RAM-Ball is free of dirt and contaminants before reassembling. Failure to comply can result in slippage or excess wear of RAM-Ball assembly.

c. Inspect and clean RAM-Ball socket arm and display base with ball, as necessary, using clean lint-free wipes.

d. Insert RAM-Ball display base with ball into RAM-Ball socket arm.

e. Install remaining square neck bolt (10), spacer (9), safety lanyard (4) and self-locking wing nut (8) on RAM-Ball display base with ball and DU isolation assembly (1) bottom plate.

f. Adjust viewing angle and tighten RAM-Ball knob.

g. Secure W2 display cable and ground strap to DU isolation assembly (1) bottom plate using tie-wraps.

h. Dress tie-wraps using diagonal wire cutters.

i. Replace DU IAW Unit Maintenance Manual TM 11-7010-326-20&P, Chapter 2.

j. Perform Functional Check IAW paragraph X–6.1.

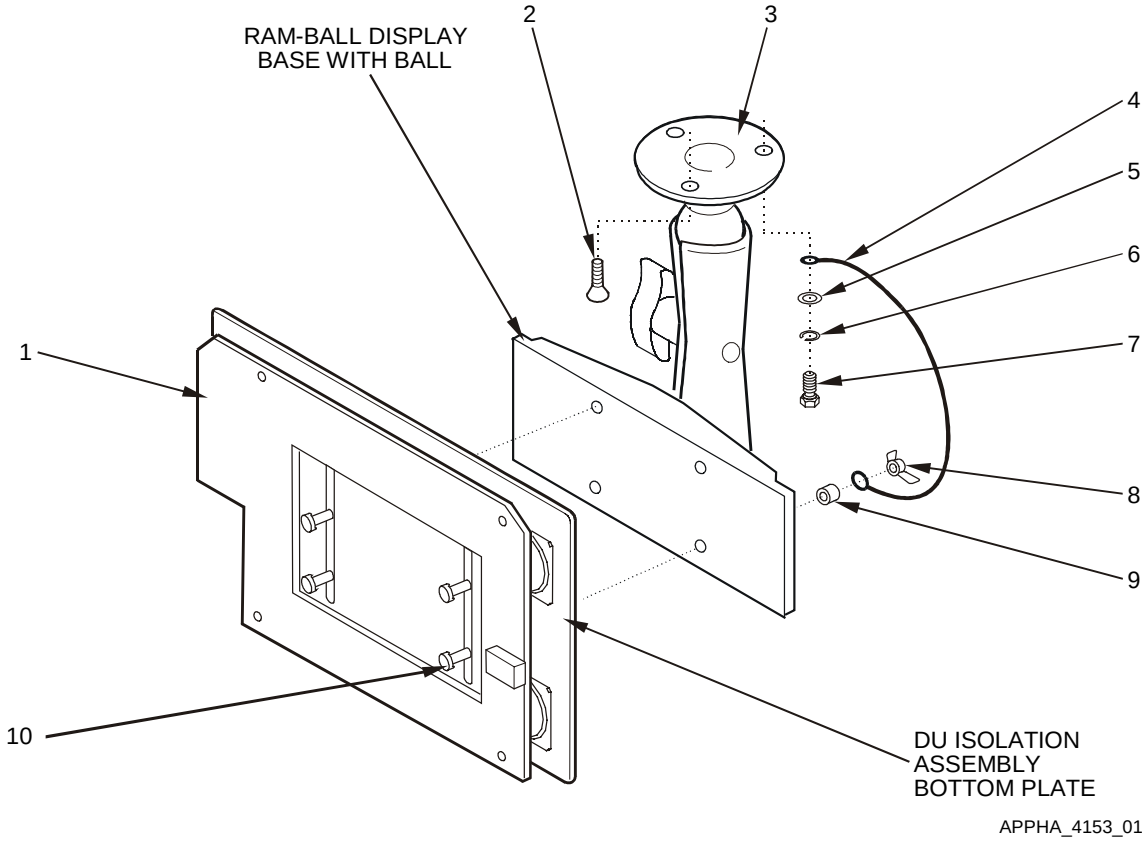

Figure X-7. Remove and Replace DU Isolation Assembly and Ram-Ball Assembly

Key and Parts List for Figure X-7

ITEM NO.	NOMENCLATURE	CAGE CODE	PART NUMBER	NSN	QTY	SMR
1	(DU isolation assembly) Plate, Resilient Mount DU	0J198	872871-1	5340-01-481-5743	1	PAODD
2	Screw, Flathead	80205	MS35190-289	5305-00-958-5246	2	PAOZZ
3	RAM-Ball Mount	0J198	889489-1		1	PAOZZ
4	Wire Rope Assembly	39428	30645T11		1	PAOZZ
5	Washer, Flat	96906	MS27183-11	5310-00-809-3078	1	PAOZZ
6	Washer, Lock	96906	MS35333-40	5310-00-550-1130	1	PAOZZ
7	Screw, Cap, Hexagon	80204	B1821AH025C100N	5305-01-389-7984	1	PAOZZ
8	Nut, Self-Locking, Wing	96906	MS51553-420	5310-01-384-2546	4	PAOZZ
9	Spacer, Aluminum	57177	10705AL315C		4	PAOZZ
10	Bolt, Square Neck	96906	MS35751-17	5306-00-889-2943	4	PAOZZ
--	Assembly, Lock DU	0J198	872843-1		1	XBOOO
--	Bracket, Locking	0J198	861871-3		1	XBOZZ
--	Washer, Lock	96906	MS35338-42	5310-00-045-3299	2	PAOZZ
--	Screw	80205	MS35190-253	5305-00-059-4568	2	PAOZZ

X–6.10 REMOVE/REPLACE RAM-BALL ASSEMBLY

Refer to Figure X-7.

NOTE

Ground straps are attached to components at one end (PU and DU) and a frame ground at the other end. Regardless of where the ground strap terminates, it is usually a burnished (void of paint) area. If the ground strap is removed from a burnished area, make sure to return it to the same burnished area. Where applicable, always connect the ground strap first when assembling, and disconnect the ground strap last when disassembling.

X–6.10.1 REMOVE RAM-BALL ASSEMBLY

WARNING

Before conducting maintenance involving the removal and replacement of system components, ensure that all power to the FBCB2 system is off (including power from the vehicle). Failure to comply with warning may result in equipment damage or injury to personnel.

a. Power down AN/UYK-128(V) system IAW Operator's Manual TM 11-7010-326-10, or Pocket Guide TB 11-7010-326-10.

b. Remove DU IAW Unit Maintenance Manual TM 11-7010-326-20&P, Chapter 2.

NOTE

Note cable routing and tie-wrap locations before removing cable or tie-wraps.

c. Remove tie-wraps securing W2 display cable and ground strap to DU isolation assembly using diagonal wire cutters.

d. Remove one self-locking wing nut (8), safety lanyard (4), spacer (9) and square neck bolt (10) from RAM-Ball display base with ball and DU isolation assembly (1) bottom plate.

CAUTION

Ensure support is provided to display while loosening RAM-Ball knob. Failure to comply could result in display falling from RAM-Ball mount causing equipment damage.

e. Loosen RAM-Ball knob while supporting DU isolation assembly (1) until RAM-Ball display base with ball can be lifted free of RAM-Ball socket arm.

f. Remove remaining three self-locking wing nuts (8), spacers (9) and square neck bolts (10) from RAM-Ball display base with ball and DU isolation assembly bottom plate.

g. Remove RAM-Ball socket arm (1) from RAM-Ball mounting base (1) with ball on ceiling.

h. Remove one hex head screw (7), lock washer (6), flat washer (5) and safety lanyard (4) from RAM-Ball mounting base with ball and ceiling using a 7/16" socket with ratchet.

i. Remove two flat head screws (2) from RAM-Ball mounting base with ball and ceiling using a No. 3 cross-tip screwdriver.

X–6.10.2 REPLACE RAM-BALL ASSEMBLY

a. Align three holes in RAM-Ball mounting base with ball (1) with ceiling installation holes.

b. Install one hex head screw (7), lock washer (6), flat washer (5) and safety lanyard (4), in RAM-Ball mounting base with ball and ceiling using a 7/16” socket with ratchet.

c. Install two flat head screws (2) in RAM-Ball mounting base with ball and ceiling using a No. 3 cross-tip screwdriver.

CAUTION

Ensure RAM-Ball is free of dirt and contaminants before reassembling. Failure to comply can result in slippage or excess wear of RAM-Ball assembly.

d. Inspect and clean RAM-Ball socket arm (1), display and mounting base with ball, as necessary, using clean lint-free wipes.

e. Install RAM-Ball socket arm on RAM-Ball mounting base with ball.

f. Align four holes in RAM-Ball display base with ball with slots in DU isolation assembly bottom plate.

g. Install three square neck bolts (10), spacers (9) and self-locking wing nuts (8) to secure DU isolation assembly bottom plate to RAM-Ball display base with ball.

h. Insert RAM-Ball display base with ball into RAM-Ball socket arm.

i. Adjust viewing angle and tighten RAM-Ball knob.

j. Install remaining square neck bolt (10), spacer (9), safety lanyard (4) and self-locking wing nut (8) on RAM-Ball display base with ball and DU isolation assembly (1) bottom plate.

k. Install DU IAW Unit Maintenance Manual TM 11-7010-326-20&P, Chapter 2.

l. Secure W2 display cable and ground strap to DU isolation assembly using tie-wraps.

m. Dress tie-wraps using diagonal wire cutters.

n. Perform Functional Check IAW paragraph X–6.1.

X–6.11 REMOVE/REPLACE KEYBOARD UNIT (KU) STOWAGE BOX

Refer to Figure X-8.

X–6.11.1 REMOVE KEYBOARD UNIT (KU) STOWAGE BOX

a. Loosen RAM-Ball knob and move display to allow access to PU.

b. Tighten RAM-Ball knob.

c. Remove KU from stowage box, if stowed.

d. Loosen four KU stowage box captive screws until the captive screws move freely using a No. 2 cross-tip screwdriver.

e. Remove KU stowage box (1) from PU.

X–6.11.2 REPLACE KEYBOARD UNIT (KU) STOWAGE BOX

a. Align four KU stowage box captive screws with PU installation holes.

b. Tighten four captive screws using a No. 2 cross-tip screwdriver.

c. Stow KU, if necessary.

d. Loosen RAM-Ball knob.

e. Adjust viewing angle and tighten RAM-Ball knob.

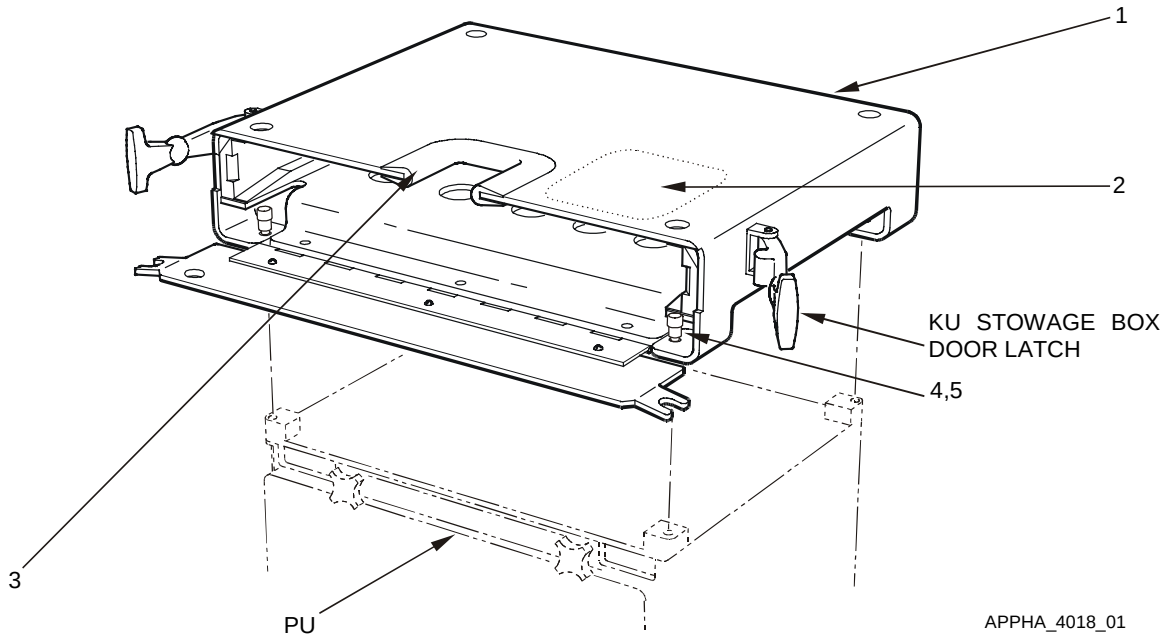

Figure X-8. Remove and Replace Keyboard Unit (KU) Stowage Box

Key and Parts List for Figure X-8

ITEM NO.	NOMENCLATURE	CAGE CODE	PART NUMBER	NSN	QTY	SMR
1	Box, KU Stowage	0J198	872845-1	2540-01-481-5744	1	PAODD
--	Case, Keyboard	0J198	872845-11		1	XBOOO
2	Label, Keyboard Box	0J198	881323-1		1	PAOZZ
3	Rubber Edge Trim	39428	8507K16	5325-01-435-2840	9	PAOZZ
4	Screw, Captive Panel	57177	PH207-05SS1032		4	PAOZZ
5	Retainer, Panel Screw	57177	214-03SS10-32		4	PAOZZ
--	Bottom, Stowage Box	0J198	872845-12		1	XBOOO
--	Side Rail, Keybd Box	0J198	872845-13		1	XBOOO
--	Side Rail, Keybd Box	0J198	872845-14		1	XBOOO
--	Door, Keyboard Box	0J198	872845-15		1	XBOOO
--	Hinge, Keyboard Box	0J198	872845-16		1	XBOOO
--	Strip, Rubber	0J198	872845-17		1	XBOOO
--	Rivet, Solid, Csk	96906	MS20426AD-4-5	5320-00-117-6950	6	PAOZZ
--	Screw, Pan Head	96906	MS35206-229	5305-00-984-4989	14	PAOZZ
--	Washer, Flat	96906	MS27183-5	5310-00-983-8483	16	PAOZZ
--	Washer, Lock	96906	MS35338-41	5310-00-045-4007	13	PAOZZ
--	Nut, Plain	96906	MS35649-262	5310-00-934-9747	3	PAOZZ
--	Adhesive	04963	SCOTCH-GRIP RUB	8040 006644318	1	PAOZZ
--	Grip, Handle Assembly	0J198	861867-1		1	XBOOO
--	Grip, Handle	0J198	861869-1		1	XBOZZ
--	Screw, Machine	96906	MS35206-228	5305-00-984-4988	4	PAOZZ
--	Washer, Lock	96906	MS35338-41	5310-00-045-4007	4	PAOZZ
--	Tape, Shielding, Elect	39428	7648A34		1	XBOZZ

X–6.12 REMOVE/REPLACE KEYBOARD UNIT (KU) STOWAGE BOX DOOR LATCHES

Refer to Figure X-9.

X–6.12.1 REMOVE KEYBOARD UNIT (KU) STOWAGE BOX DOOR LATCHES

NOTE

If replacing the curbside KU stowage box latch, due to limited clearance remove the stowage box from the PU IAW paragraph X–6.11.1.

a. Pull rubber T-handles and unfasten KU stowage box door latches, if necessary.

b. Remove two pan head screws (1), lock washers (2) and flat washers (3) from each KU stowage box door latch (4) using a No. 2 cross-tip screwdriver.

c. Remove KU stowage box door latch (4).

X–6.12.2 REPLACE KEYBOARD UNIT (KU) STOWAGE BOX DOOR LATCHES

NOTE

The same KU stowage box door latch part is used for each side of the KU stowage box. Position the bumper that is on one side of the latch so that it is toward the side of the KU stowage box when fastened.

a. Align KU stowage box door latch mounting holes with mounting holes in KU stowage box.

b. Install and tighten two pan head screws (1), lock washers (2) and flat washers (3) for each KU stowage box door latch (4), using a No. 2 cross-tip screwdriver.

c. Pull rubber T-handles and fasten KU stowage box door latches.

NOTE

If the curbside KU stowage box latch was replaced, install the stowage box on the PU IAW paragraph X–6.11.2.

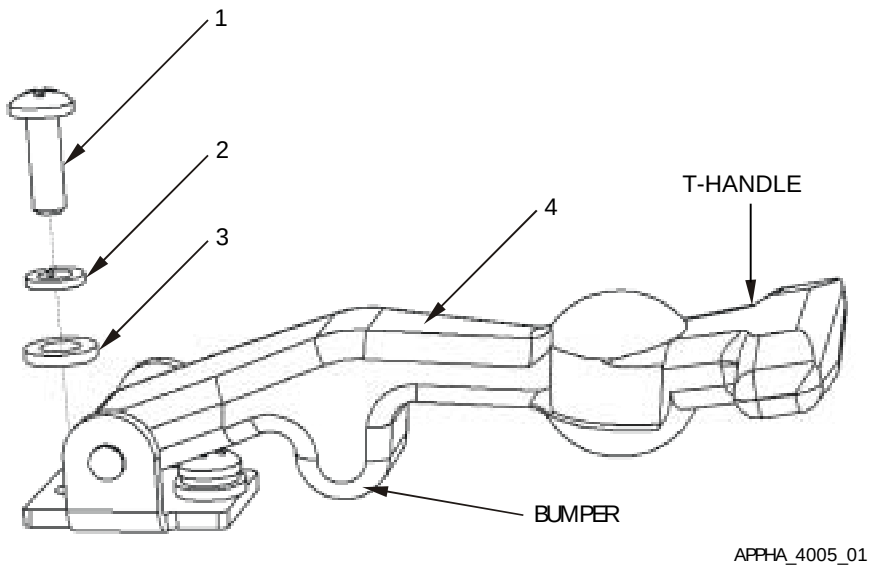

Figure X-9. Remove and Replace Keyboard Unit (KU) Stowage Box Door Latches

Key and Parts List for Figure X-9

ITEM NO.	NOMENCLATURE	CAGE CODE	PART NUMBER	NSN	QTY	SMR
1	Screw, Pan Head	96906	MS35206-229	5305-00-984-4989	4	PAOZZ
2	Washer, Lock	96906	MS35338-41	5310-00-045-4007	4	PAOZZ
3	Washer, Flat	96906	MS27183-5	5310-00-983-8483	4	PAOZZ
4	(KU stowage box door latch) Latch, Thumb	94222	37-20-071-20	5340-01-351-3340	2	PAOZZ

This page intentionally left blank.

APPENDIX Y

SUPPLEMENTARY INFORMATION FOR

M934 EXPANDO VAN

TABLE OF CONTENTS

Page

Y–1 GENERAL Y–3

Y–2 COMPONENT ITEM NUMBERS AND PART NUMBERS Y–3

Y–3 SYSTEM INTERFACES Y–3

Y–3.1 MECHANICAL Y–3

Y–3.2 CABLE INTERFACES Y–4

Y–4 COMPONENT LOCATION Y–6

Y–5 PLATFORM-UNIQUE TROUBLESHOOTING Y–7

Y–6 REMOVAL/REPLACEMENT IN THE PLATFORM Y–7

Y–6.1 FUNCTIONAL CHECK Y–7

Y–6.2 REMOVE/REPLACE W1 POWER CABLE Y–8

Y–6.3 REMOVE/REPLACE W2 DISPLAY CABLE Y–9

Y–6.4 REMOVE/REPLACE W3 SERIAL INTERFACE ADAPTER DEVICE (SIAD) Y–10

Y–6.5 REMOVE/REPLACE W3P PLGR CABLE Y–11

Y–6.6 REMOVE/REPLACE W3N INC CABLE Y–12

Y–6.7 REMOVE/REPLACE PU ISOLATION ASSEMBLY Y–14

Y–6.8 REMOVE/REPLACE DU ISOLATION ASSEMBLY Y–16

Y–6.9 REMOVE/REPLACE RAM-BALL ASSEMBLY Y–19

Y–6.10 REMOVE/REPLACE KEYBOARD UNIT (KU) STOWAGE BOX Y–22

Y–6.11 REMOVE/REPLACE KEYBOARD UNIT (KU) STOWAGE BOX DOOR LATCHES Y–24

LIST OF FIGURES

Page
Figure Y-1. Equipment Interface Block Diagram Y–5
Figure Y-2. Relative Component Locations Y–6
Figure Y-3. Cable Run Y–13
Figure Y-4. Remove and Replace PU Isolation Assembly Y–15
Figure Y-5. Remove and Replace DU Isolation Assembly Y–18
Figure Y-6. Remove and Replace RAM-Ball Assembly Y–20
Figure Y-7. Remove and Replace Keyboard Unit (KU) Stowage Box Y–22
Figure Y-8. Remove and Replace Keyboard Unit (KU) Stowage Box Door Latch Y–25

Y–1 GENERAL

This appendix describes the interfaces between the FBCB2 equipment and the M934 Expando Van. This Appendix also identifies the component parts of the M934 platform installation kit and details the removal and replacement procedures particular to the M934.

Y–2 COMPONENT ITEM NUMBERS AND PART NUMBERS

Key and Parts List tables contained in the Removal and Replacement section of this Appendix serve a dual purpose. Use the Item Numbers in the Key to identify components and attaching hardware shown in the Figures illustrating the tasks. The nomenclature and part number for the hardware and equipment mounting components of the installation kit also are keyed to the Item Numbers in the tables. Additional parts ordering information, such as Contractor and Government Entity code (CAGE); National Stock Number (NSN); quantity; and Source, Maintenance and Recoverability (SMR) codes, are provided. The Key and Parts List follow the task illustrations.

Y–3 SYSTEM INTERFACES

Y–3.1 MECHANICAL

The mechanical hardware-to-hardware interfaces include:

a. Cables

b. Processor Unit (PU)

c. Display Unit (DU)

d. Keyboard Unit (KU)

Y–3.2 CABLE INTERFACES

Figure Y-1 illustrates a block diagram of the interfaces between FBCB2 equipment and the M934 (Platform). Figure Y-1 also illustrates the signal and control interfaces along with the terminal connector labels (e.g., P1, P2). The purpose of each cable is listed below:

Cable Name	Purpose
W1–Cable	Supplies vehicle power to the AN/UYK-128(V) computer and its subassemblies.
W2–Cable	Supplies power and signals to the Display Unit (DU) and Keyboard Unit (KU). Returns Man Machine Interface (MMI) information from the KU to the Processor Unit (PU).
W3–Cable	The Serial Interface Adapter Device (SIAD) is a conduit assembly that breaks out each of the serial interface ports to a connector.
W3P–Cable	Collects position and time information from the PLGR.
W3N–Cable	Provides duplex communication between the PU, Internet Controller (INC) and radios.
W4–Cable	Audio cable (This cable is not used in this platform).
W5–Cable	The Expansion Interface Adapter Device (EIAD) is connected to the Universal Serial Bus (USB) connector only when this vehicle is to be used in a Tactical Operations Center (TOC) set-up. When used in this configuration, it is connected between the PU J5 connector and local router.
Ground Strap	Provides safety ground for the PU.
Ground Strap	Provides safety ground for the DU.

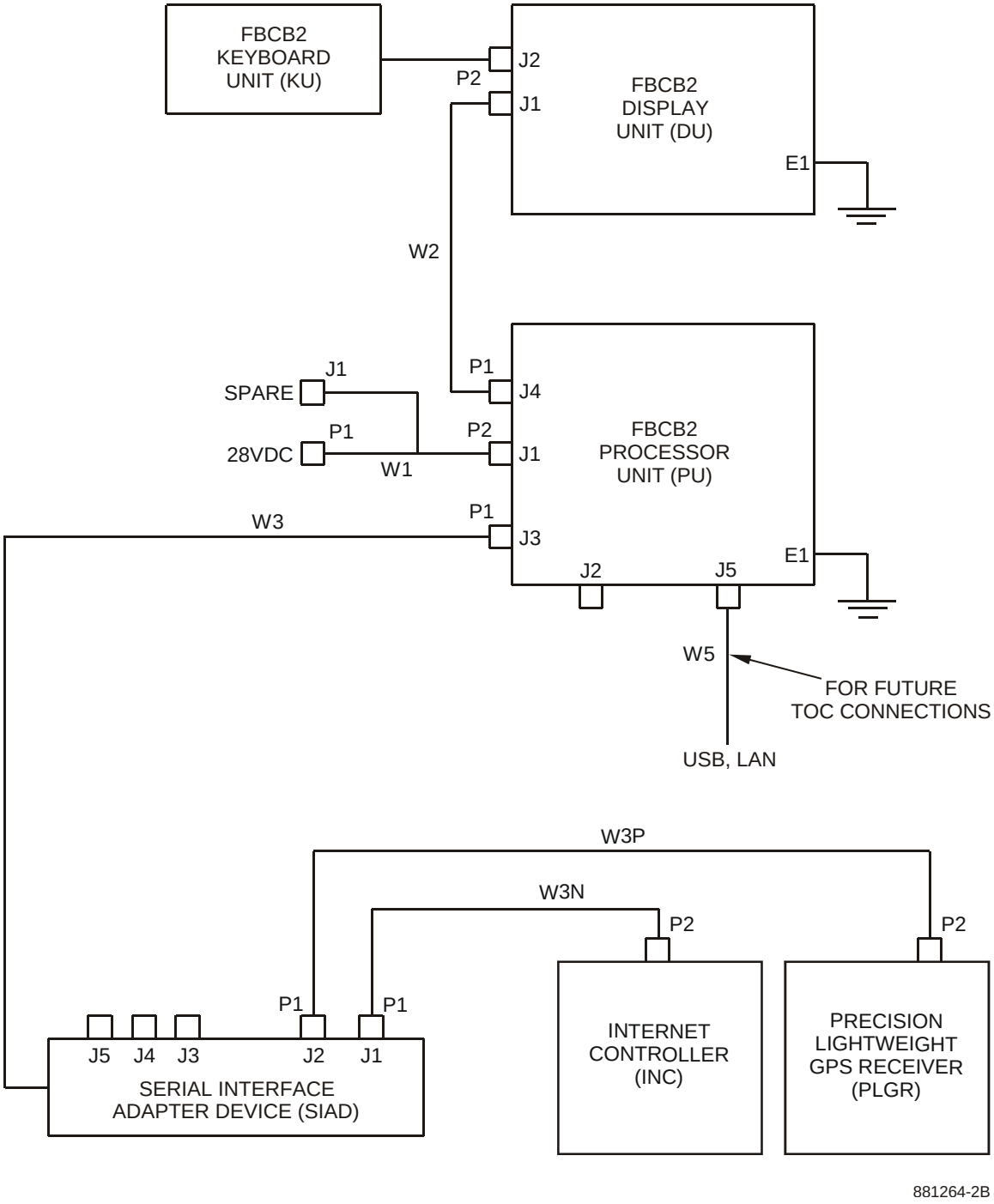

Figure Y-1. Equipment Interface Block Diagram

Y–4 COMPONENT LOCATION

There are two location configurations of the AN/UYK-128(V) components within M934 EXPANDO Vans. The AN/UYK-128(V) components may be mounted roadside on the existing table or the components may be mounted forward on a shelf. Connectivity and removal/replacement are the same for either location. Figure Y-2 shows the relative location of the AN/UYK-128(V) components mounted on the table within the vehicle.

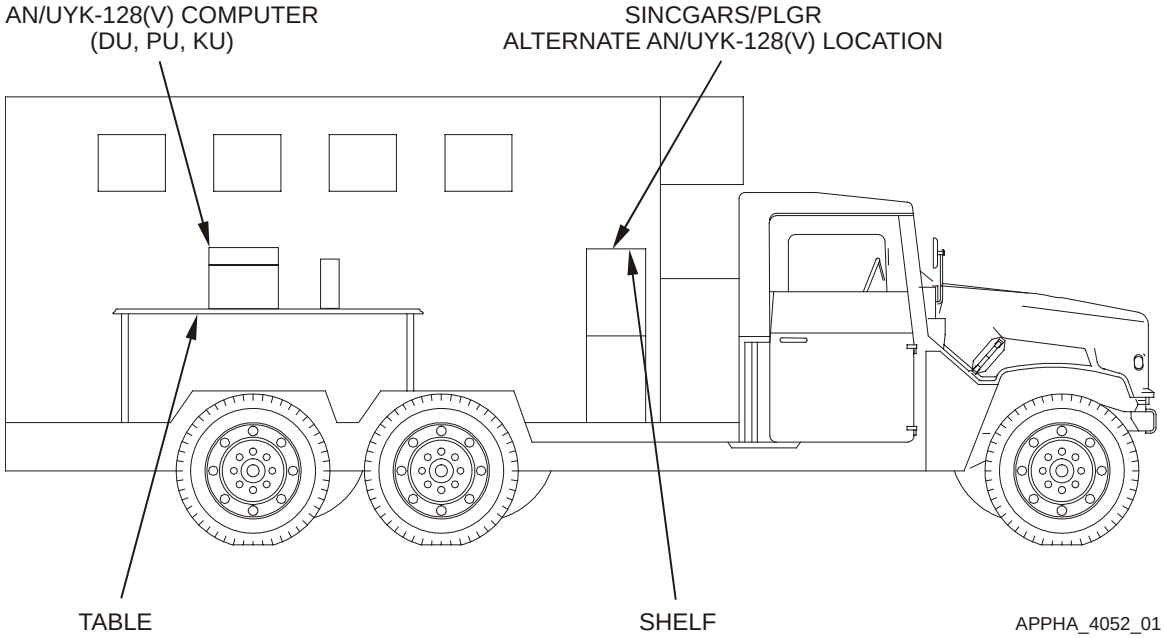

Figure Y-2. Relative Component Locations

Y–5 PLATFORM-UNIQUE TROUBLESHOOTING

There are no unique troubleshooting procedures for this vehicle.

Y–6 REMOVAL/REPLACEMENT IN THE PLATFORM

Most installations must be tailored to the platform. Cables and brackets are unique to the installation. Before a part or assembly is removed from a vehicle, fill out a “Maintenance Request” DA Form 2407. One copy of this completed form must remain with the vehicle and the remaining copies must be kept with the failed component. To prove the operability of the system after an item is replaced, perform the system Functional Check.

Y–6.1 FUNCTIONAL CHECK

Y–6.1.1 POWER UP

Power up and initialize all interface equipment and the AN/UYK-128(V) In Accordance With (IAW) the Operator’s Manual TM 11-7010-326-10, or Pocket Guide TB 11-7010-326-10.

Y–6.1.2 VERIFICATION

NOTE

Observe that the Display Unit PWR, DISP and CPU green LED lights are lit.

a. Observe that the PLGR synchronizes with PU, indicated by the PLGR dialog box showing green.

b. Observe that the Router synchronizes with the PU, indicated by the Router dialog box showing green.

c. At the Session Manager screen, select OPS button to display the OPS screen.

d. Verify the GPS status is either green or amber on the Classification/Status Bar.

e. Verify the Communications status is either green or amber on the Classification/Status Bar.

Y–6.1.3 POWER DOWN

Power down all interface equipment and the AN/UYK-128(V) IAW the Operator’s Manual TM 11-7010-326-10, or Pocket Guide TB 11-7010-326-10.

Y–6.2 REMOVE/REPLACE W1 POWER CABLE

Refer to Figure Y-3.

Y–6.2.1 REMOVE W1 POWER CABLE

WARNING

Before conducting maintenance involving the removal and replacement of system components, ensure that all power to the FBCB2 system is off (including power from the vehicle). Failure to comply with warning may result in equipment damage or injury to personnel.

a. Power down AN/UYK-128(V) system IAW Operator's Manual TM 11-7010-326-10, or Pocket Guide TB 11-7010-326-10.

b. Power down SINCGARS IAW TM 11-5820-890-10-8.

c. Unlatch and slide the Vehicular Amplifier-Adapter (VAA) (AM 7239/VRC) forward from SINCGARS Mounting Base (MB) (MT-6352/VRC) to allow access to W1 cable connector IAW TM 11-5820-890-10-8.

d. Disconnect W1-P1 cable connector from the SINCGARS Mounting Base (MB) (MT-6352/VRC) A4-J2 connector.

e. Disconnect W1-J1 cable connector from power interface cable (if applicable).

f. Disconnect W1-P2 cable connector from PU J1 connector.

g. Install protective cap on PU J1 connector.

NOTE

Note the cable routing and tie-wrap locations before removing cable or tie-wraps.

h. Remove tie-wraps securing W1 cable using diagonal wire cutters.

i. Remove W1 power cable (1).

Y–6.2.2 REPLACE W1 POWER CABLE

a. Route W1 power cable (1).

b. Remove protective cap from PU J1 connector.

c. Connect W1-P2 cable connector to PU J1 connector.

d. Connect W1-J1 cable connector to power interface cable (if applicable).

e. Connect W1-P1 cable connector to SINCGARS Mounting Base (MB) (MT-6352A/VRC) A4-J2 connector.

f. Secure W1 cable using tie-wraps, as applicable.

g. Dress tie-wraps using diagonal wire cutters.

h. Secure Vehicular Amplifier-Adapter (VAA) to the SINCGARS Mounting Base IAW TM 11-5820-890-10-8.

i. Perform Functional Check IAW paragraph Y–6.1.

Y–6.3 REMOVE/REPLACE W2 DISPLAY CABLE

Refer to Figure Y-3.

Y–6.3.1 REMOVE W2 DISPLAY CABLE

WARNING

Before conducting maintenance involving the removal and replacement of system components, ensure that all power to the FBCB2 system is off (including power from the vehicle). Failure to comply with warning may result in equipment damage or injury to personnel.

a. Power down AN/UYK-128(V) system IAW Operator's Manual TM 11-7010-326-10, or Pocket Guide TB 11-7010-326-10.

b. Disconnect W2-P1 cable connector from PU J4 connector.

c. Install protective cap on PU J4 connector.

d. Disconnect W2-P2 cable connector from display J1 connector.

e. Install protective cap on display J1 connector.

NOTE

Note the cable routing and tie-wrap locations before removing cable or tie-wraps.

f. Remove tie-wraps from W2 cable and ground strap using diagonal wire cutters.

g. Remove W2 display cable (5).

Y–6.3.2 REPLACE W2 DISPLAY CABLE

a. Route W2 display cable (5).

b. Remove protective cap from display J1 connector.

c. Connect W2-P2 cable connector to display J1 connector.

d. Remove protective cap from PU J4 connector.

e. Connect W2-P1 cable connector to PU J4 connector.

f. Secure W2 cable and ground strap using tie-wraps.

g. Dress tie-wraps using diagonal wire cutters.

h. Perform Functional Check IAW paragraph Y–6.1.

Y–6.4 REMOVE/REPLACE W3 SERIAL INTERFACE ADAPTER DEVICE (SIAD)

Refer to Figure Y-3.

Y–6.4.1 REMOVE W3 SERIAL INTERFACE ADAPTER DEVICE (SIAD)

WARNING

Before conducting maintenance involving the removal and replacement of system components, ensure that all power to the FBCB2 system is off (including power from the vehicle). Failure to comply with warning may result in equipment damage or injury to personnel.

a. Power down AN/UYK-128(V) system IAW Operator's Manual TM 11-7010-326-10, or Pocket Guide TB 11-7010-326-10.

b. Disconnect W3N-P1 cable connector from W3 SIAD J1 connector.

c. Disconnect W3P-P1 cable connector from W3 SIAD J2 connector.

d. Disconnect W3 SIAD-P1 cable connector from PU J3 connector.

e. Install protective cap on PU J3 connector.

NOTE

Note cable routing and tie-wrap locations before removing cable or tie-wraps.

f. Remove tie-wraps securing W3 SIAD using diagonal wire cutters.

g. Remove W3 SIAD (2).

Y–6.4.2 REPLACE W3 SERIAL INTERFACE ADAPTER DEVICE (SIAD)

a. Route W3 SIAD (2) into original position.

b. Remove protective cap from PU J3 connector.

c. Connect W3 SIAD-P1 cable connector to PU J3 connector.

d. Connect W3P-P1 cable connector to W3 SIAD J2 connector.

e. Connect W3N-P1 cable connector to W3 SIAD J1 connector.

f. Secure W3 SIAD using tie-wraps.

g. Dress tie-wraps using diagonal wire cutters.

h. Perform Functional Check IAW paragraph Y–6.1.

Y–6.5 REMOVE/REPLACE W3P PLGR CABLE

Refer to Figure Y-3.

Y–6.5.1 REMOVE W3P PLGR CABLE

WARNING

Before conducting maintenance involving the removal and replacement of system components, ensure that all power to FBCB2 system is off (including power from the vehicle). Failure to comply with warning may result in equipment damage or injury to personnel.

a. Power down AN/UYK-128(V) system IAW Operator's Manual TM 11-7010-326-10, or Pocket Guide TB 11-7010-326-10.

b. Disconnect W3P-P1 cable connector from W3 SIAD J2 connector.

c. Remove PLGR from mount.

d. Disconnect W3P-P2 cable connector from PLGR J2 connector using offset flat screwdriver.

NOTE

Note the cable routing and tie-wrap locations before removing cable or tie-wraps.

e. Remove tie-wraps securing W3P cable using diagonal wire cutters.

f. Remove W3P cable (3).

Y–6.5.2 REPLACE W3P PLGR CABLE

a. Route W3P cable (3).

b. Connect W3P-P2 cable connector to PLGR J2 connector using offset flat screwdriver.

c. Install PLGR in mount.

d. Connect W3P-P1 cable connector to W3 SIAD J2 connector.

e. Secure W3P cable using tie-wraps.

f. Dress tie-wraps using diagonal wire cutters.

g. Perform Functional Check IAW paragraph Y–6.1.

Y–6.6 REMOVE/REPLACE W3N INC CABLE

Refer to Figure Y-3.

Y–6.6.1 REMOVE W3N INC CABLE

WARNING

Before conducting maintenance involving the removal and replacement of system components, ensure that all power to the FBCB2 system is off (including power from the vehicle). Failure to comply with warning may result in equipment damage or injury to personnel.

a. Power down AN/UYK-128(V) system IAW Operator's Manual TM 11-7010-326-10, or Pocket Guide TB 11-7010-326-10.

b. Disconnect W3N-P1 cable connector from W3 SIAD J1 connector.

c. Disconnect W3N-P2 cable connector from SINCGARS INC J6 connector.

NOTE

Note cable routing and tie-wrap locations before removing cable or tie-wraps.

d. Remove tie-wraps securing W3N cable using diagonal cutters.

e. Remove W3N cable (4).

Y–6.6.2 REPLACE W3N INC CABLE

a. Route W3N cable (4).

b. Connect W3N-P2 cable connector to SINCGARS INC J6 connector.

c. Connect W3N-P1 cable connector to W3 SIAD J1 connector.

d. Secure W3N cable using tie-wraps.

e. Dress tie-wraps using diagonal wire cutters.

f. Perform Functional Check IAW paragraph Y–6.1.

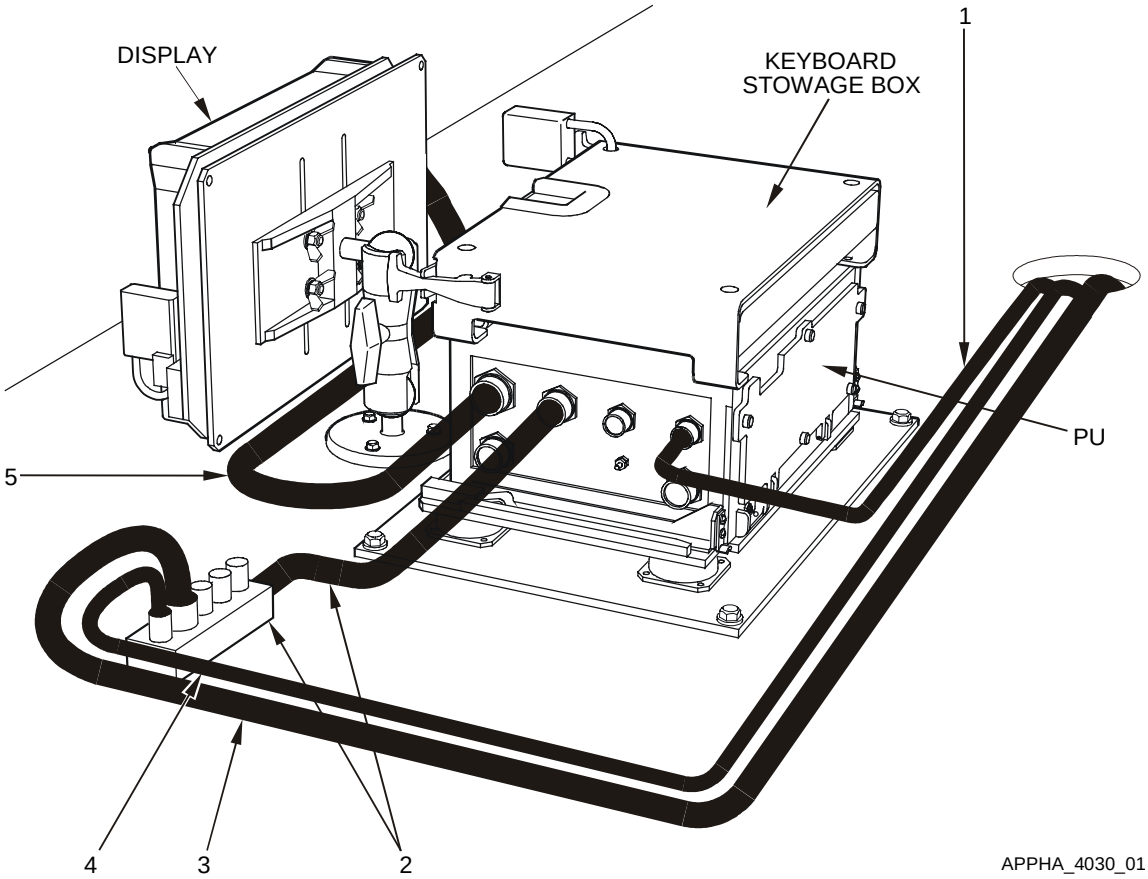

Figure Y-3. Cable Run

Key and Parts List for Figure Y-3

ITEM NO.	NOMENCLATURE	CAGE CODE	PART NUMBER	NSN	QTY	SMR
1	Cable Assembly W1	0J198	861880-3	5995-01-478-4950	1	PAODD
2	Adapter Assy SIAD W3	0J198	881331-1	4920-01-478-3722	1	PAODD
3	Cable Assembly W3P	0J198	881335-4	5995-01-478-4906	1	PAODD
4	Cable Assembly W3N	0J198	881336-4	5995-01-478-4926	1	PAODD
5	Cable Assembly W2	0J198	881327-1	5995-01-478-4876	1	PAODD
--	Strap, Tie Down, Elect	39428	7130K31		25	PAOZZ
--	Holder, Cable, Tie 2w	39428	7566K27		25	PAOZZ

Y–6.7 REMOVE/REPLACE PU ISOLATION ASSEMBLY

Refer to Figure Y-4.

NOTE

Ground straps are attached to components at one end (PU and DU) and a frame ground at the other end. Regardless of where the ground strap terminates, it is usually a burnished (void of paint) area. If the ground strap is removed from a burnished area, make sure to return it to the same burnished area. Where applicable, always connect the ground strap first when assembling, and disconnect the ground strap last when disassembling.

Y–6.7.1 REMOVE PU ISOLATION ASSEMBLY

WARNING

Before conducting maintenance involving the removal and replacement of system components, ensure that all power to the FBCB2 system is off (including power from the vehicle). Failure to comply with warning may result in equipment damage or injury to personnel.

a. Power down AN/UYK-128(V) system IAW Operator's Manual TM 11-7010-326-10, or Pocket Guide TB 11-7010-326-10.

NOTE

Do not remove the Removable Hard Disk Drive Cartridge (RHDDC), locking bracket or keyboard unit stowage box from PU.

b. Remove PU IAW Unit Maintenance Manual TM 11-7010-326-20&P, Chapter 2.

c. Remove one hex head screw (2), flat washer (3), ground strap, flat washer (4), lock washer (5) and hex nut (6) from PU isolation assembly (1) bottom plate and shelf/table using a 7/16" open-end wrench and 7/16" socket with ratchet.

d. Remove remaining three hex head screws (2), flat washers (3), flat washers (4), lock washers (5) and hex nuts (6) from PU isolation assembly (1) bottom plate and shelf/table using a 7/16" open-end wrench and 7/16" socket with ratchet.

e. Remove PU isolation assembly (1) from shelf/table.

Y–6.7.2 REPLACE PU ISOLATION ASSEMBLY

a. Align four PU isolation assembly (1) bottom plate holes with PU mount shelf/table holes.

NOTE

To ensure positive ground, PU ground strap must make direct contact with bare metal. Ensure PU ground strap is installed in its original location at the PU isolation assembly bottom plate mounting hole. Slip the ground strap, flat washer and lock washer on the mounting screw before installing and tightening nut.

Y–6.7.2 REPLACE PU ISOLATION ASSEMBLY (Continued)

b. Install one hex head screw (2), flat washer (3), ground strap, flat washer (4), lock washer (5) and hex nut (6) on PU isolation assembly (1) bottom plate and shelf/table using a 7/16” socket with ratchet.

c. Install remaining three hex head screws (2), flat washers (3), flat washers (4), lock washers (5) and hex nuts (6) on PU isolation assembly (1) bottom plate and shelf/table using 7/16” socket with ratchet.

d. Install PU IAW Unit Maintenance Manual TM 11-7010-326-20&P, Chapter 2.

e. Perform Functional Check IAW paragraph Y–6.1.

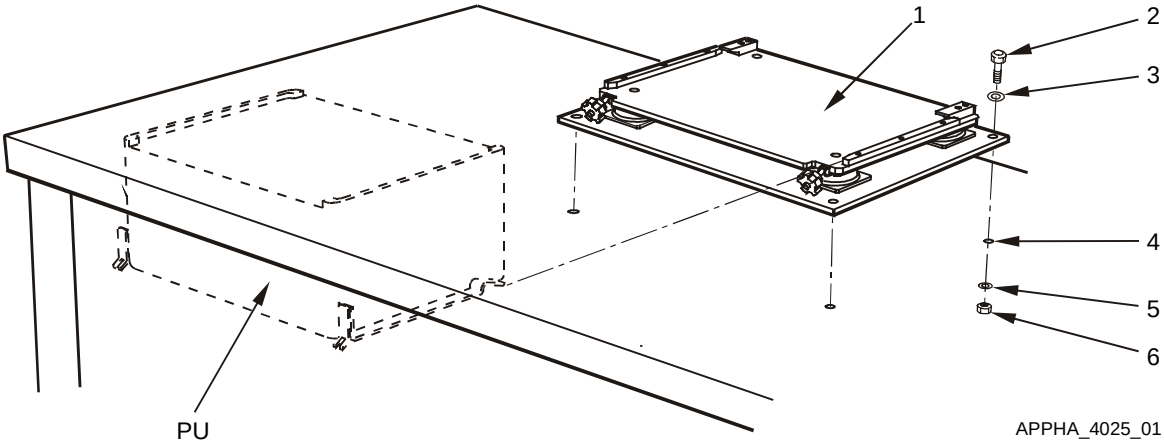

Figure Y-4. Remove and Replace PU Isolation Assembly

Key and Parts List for Figure Y-4

ITEM NO.	NOMENCLATURE	CAGE CODE	PART NUMBER	NSN	QTY	SMR
1	(PU isolation assembly) Plate, Resilient Mount PU	0J198	872826-1	8340-01-481-4742	1	PAODD
2	Screw, Cap, Hexagon	80204	B1821AH025C225N	5305-00-071-2512	4	PAOZZ
3	Washer, Flat	88044	AN970-4	5310-00-167-0766	4	PAOZZ
4	Washer, Flat	96906	MS27183-10	5310-00-809-4058	4	PAOZZ
5	Washer, Lock	96906	MS35333-40	5310-00-550-1130	4	PAOZZ
6	Nut, Plain, Hexagon	10110	MS51967-2	5310-01-291-3389	4	PAOZZ
--	Assembly, PU Lock	0J198	861865-1		1	XBOOO
--	Bracket, Locking	0J198	861871-1		1	XBOZZ
--	Screw	80205	MS35190-253	5305-00-059-4568	2	PAOZZ

Y–6.8 REMOVE/REPLACE DU ISOLATION ASSEMBLY

Refer to Figure Y-5.

NOTE

Ground straps are attached to components at one end (PU and DU) and a frame ground at the other end. Regardless of where the ground strap terminates, it is usually a burnished (void of paint) area. If the ground strap is removed from a burnished area, make sure to return it to the same burnished area. Where applicable, always connect the ground strap first when assembling, and disconnect the ground strap last when disassembling.

Y–6.8.1 REMOVE DU ISOLATION ASSEMBLY

WARNING

Before conducting maintenance involving the removal and replacement of system components, ensure that all power to the FBCB2 system is off (including power from the vehicle). Failure to comply with warning may result in equipment damage or injury to personnel.

a. Power down AN/UYK-128(V) system IAW Operator's Manual TM 11-7010-326-10, or Pocket Guide TB 11-7010-326-10.

b. Remove DU IAW Unit Maintenance Manual TM 11-7010-326-20&P, Chapter 2.

NOTE

Note cable routing and tie-wrap locations before removing cable or tie-wraps.

c. Remove tie-wraps securing W2 display cable and ground strap to DU isolation assembly using diagonal wire cutters.

d. Loosen RAM-Ball knob while supporting DU isolation assembly (1) until the RAM-Ball display base with ball can be lifted free of RAM-Ball socket arm.

e. Remove four self-locking wing nuts (2), spacers (3) and square neck bolts (4) from RAM-Ball display base with ball and DU isolation assembly (1) bottom plate.

f. Remove DU isolation assembly (1).

Y–6.8.2 REPLACE DU ISOLATION ASSEMBLY

a. Align four RAM-Ball display base with ball installation holes with slots in the DU isolation assembly (1) bottom plate.

b. Install four square neck bolts (4), spacers (3) and self-locking wing nuts (2) on RAM-Ball display base with ball and DU isolation assembly (1) bottom plate.

CAUTION

Ensure RAM-Ball is free of dirt and contaminants before reassembling. Failure to comply can result in slippage or excess wear of RAM-Ball assembly.

c. Inspect and clean RAM-Ball socket arm and display base with ball, as necessary, using clean lint-free wipes.

d. Insert RAM-Ball display base with ball into RAM-Ball socket arm.

e. Adjust viewing angle and tighten RAM-Ball knob.

f. Secure W2 display cable and ground strap to DU isolation assembly (1) bottom plate using tie-wraps.

g. Dress tie-wraps using diagonal wire cutters.

h. Replace DU IAW Unit Maintenance Manual TM 11-7010-326-20&P, Chapter 2.

i. Perform Functional Check IAW paragraph Y–6.1.

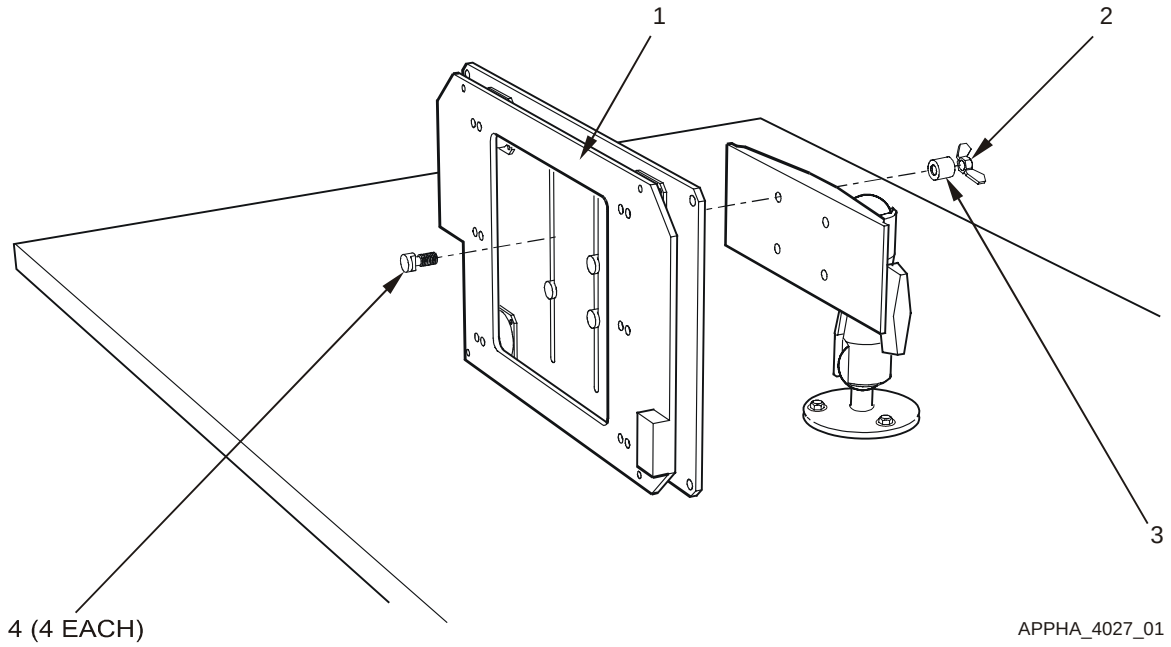

Figure Y-5. Remove and Replace DU Isolation Assembly

Key and Parts List for Figure Y-5

ITEM NO.	NOMENCLATURE	CAGE CODE	PART NUMBER	NSN	QTY	SMR
1	(DU isolation assembly) Plate, Resilient Mount DU	0J198	872871-1	5340-01-481-5743	1	PAODD
2	Nut, Self-Locking, Wing	96906	MS51553-420	5310-01-384-2546	4	PAOZZ
3	Spacer, Aluminum	57177	10705AL315C		4	PAOZZ
4	Bolt, Square Neck	96906	MS35751-17	5306-00-889-2943	4	PAOZZ
--	Strap, Tie Down, Elect	39428	7130K31		6	PAOZZ
--	Assembly, DU Lock	0J198	872843-1		1	XBOOO
--	Bracket, Locking	0J198	861871-3		1	XBOZZ
--	Screw, Flat Head	80205	MS35190-253	5305-00-059-4568	2	PAOZZ
--	Washer, Lock	96906	MS35338-42	5310-00-045-3299	2	PAOZZ

Y–6.9 REMOVE/REPLACE RAM-BALL ASSEMBLY

Refer to Figure Y-6.

NOTE

Ground straps are attached to components at one end (PU and DU) and a frame ground at the other end. Regardless of where the ground strap terminates, it is usually a burnished (void of paint) area. If the ground strap is removed from a burnished area, make sure to return it to the same burnished area. Where applicable, always connect the ground strap first when assembling, and disconnect the ground strap last when disassembling.

Y–6.9.1 REMOVE RAM-BALL ASSEMBLY

WARNING

Before conducting maintenance involving the removal and replacement of system components, ensure that all power to the FBCB2 system is off (including power from the vehicle). Failure to comply with warning may result in equipment damage or injury to personnel.

a. Power down AN/UYK-128(V) system IAW Operator's Manual TM 11-7010-326-10, or Pocket Guide TB 11-7010-326-10.

b. Remove DU IAW Unit Maintenance Manual TM 11-7010-326-20&P, Chapter 2.

NOTE

Note cable routing and tie-wrap locations before removing cable or tie-wraps.

c. Remove tie-wraps securing W2 display cable and ground strap to DU isolation assembly using diagonal wire cutters.

d. Loosen RAM-Ball knob while supporting DU isolation assembly until RAM-Ball display base with ball can be lifted free of RAM-Ball socket arm.

e. Remove four self-locking wing nuts (2), spacers (3) and square neck bolts (5) from RAM-Ball display base with ball and DU isolation assembly bottom plate.

f. Remove RAM-Ball socket arm from RAM-Ball mounting base with ball on shelf/table.

g. Remove three hex nuts (8), lock washers (7), flat washers (6) and flat head screws (4) from RAM-Ball mounting base with ball and mounting bracket (9) on shelf/table using a No. 2 cross-tip screwdriver and a 3/8" open-end wrench.

Y–6.9.2 REPLACE RAM-BALL ASSEMBLY

a. Align three holes in RAM-Ball mounting base with ball with shelf/table and mounting bracket (9) installation holes.

b. Install three flat head screws (4), flat washers (6), lock washers (7) and hex nuts (8) using a No. 2 cross-tip screwdriver and 3/8" open-end wrench.

Y–6.9.2 REPLACE RAM-BALL ASSEMBLY (Continued)

CAUTION

Ensure RAM-Ball is free of dirt and contaminants before reassembling. Failure to comply can result in slippage or excess wear of RAM-Ball assembly.

c. Inspect and clean RAM-Ball socket arm, display and mounting base with ball, as necessary, using clean lint-free wipes.

d. Install RAM-Ball socket arm on RAM-Ball mounting base with ball.

e. Align four holes in RAM-Ball display base with ball with slots in DU isolation assembly bottom plate.

f. Install four square neck bolts (5), spacers (3) and self-locking wing nuts (2) on RAM-Ball display base with ball and DU isolation assembly bottom plate.

g. Insert RAM-Ball display base with ball into RAM-Ball socket arm.

h. Adjust viewing angle and tighten RAM-Ball knob.

i. Install DU IAW Unit Maintenance Manual TM 11-7010-326-20&P, Chapter 2.

j. Secure W2 display cable and ground strap to DU isolation assembly using tie-wraps.

k. Dress tie-wraps using diagonal wire cutters.

l. Perform Functional Check IAW paragraph Y–6.1.

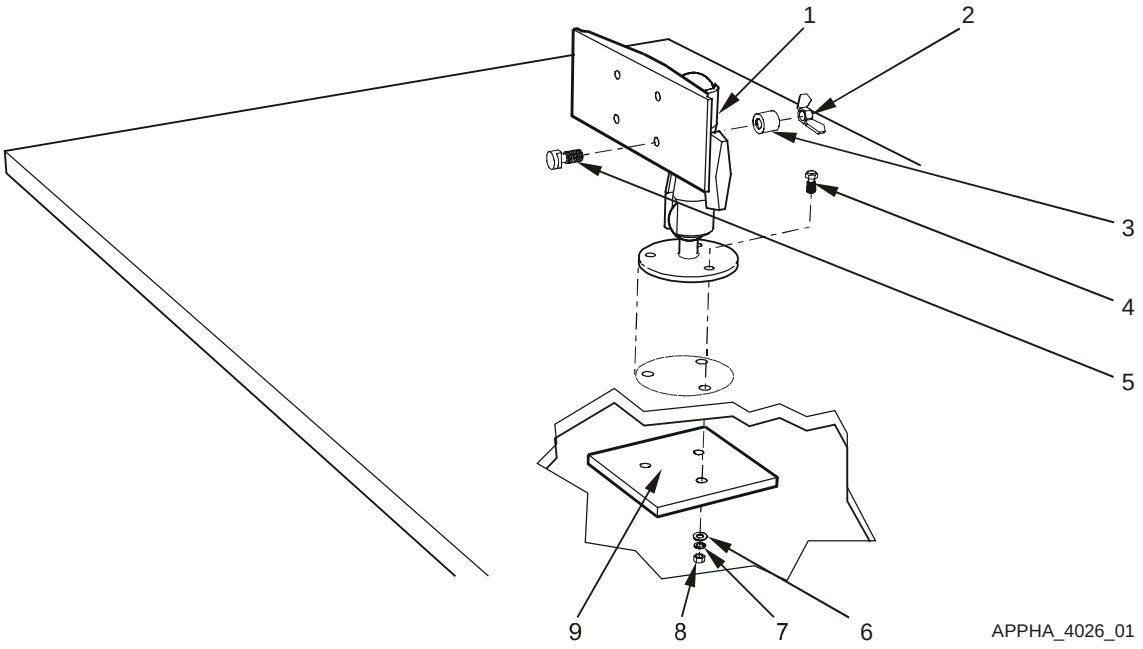

Figure Y-6. Remove and Replace RAM-Ball Assembly

Key and Parts List for Figure Y-6

ITEM NO.	NOMENCLATURE	CAGE CODE	PART NUMBER	NSN	QTY	SMR
1	(RAM-Ball assembly) Mount, RAM-Ball	0J198	889489-1		1	PAOZZ
2	Nut, Self-Locking, Wing	96906	MS51553-420	5310-01-384-2546	4	PAOZZ
3	Spacer, Aluminum	57177	10705AL315C		4	PAOZZ
4	Screw, Flat Head	96906	MS35190-296	5305-00-957-6642	3	PAOZZ
5	Bolt, Square Neck	96906	MS35751-17	5306-00-889-2943	4	PAOZZ
6	Washer, Flat	96906	MS27183-10	5310-00-809-4058	3	PAOZZ
7	Washer, Lock	96906	MS35333-40	5310-00-550-1130	3	PAOZZ
8	Nut, Plain, Hexagon	10110	MS51967-2	5310-01-291-3389	3	PAOZZ
9	Bracket, Mounting	80212	4250229		1	PAOZZ
--	Strap, Tie Down, Elect	39428	7130K31		6	PAOZZ

Y–6.10 REMOVE/REPLACE KEYBOARD UNIT (KU) STOWAGE BOX

Refer to Figure Y-7.

Y–6.10.1 REMOVE KEYBOARD UNIT (KU) STOWAGE BOX

a. Remove keyboard from stowage box, if stowed.

b. Loosen four KU stowage box captive screws until the captive screws move freely using a No. 2 cross-tip screwdriver.

c. Remove KU stowage box (1) from PU.

Y–6.10.2 REPLACE KEYBOARD UNIT (KU) STOWAGE BOX

a. Align four KU stowage box captive screws with PU installation holes.

b. Tighten four captive screws using a No. 2 cross-tip screwdriver.

c. Stow keyboard, if necessary.

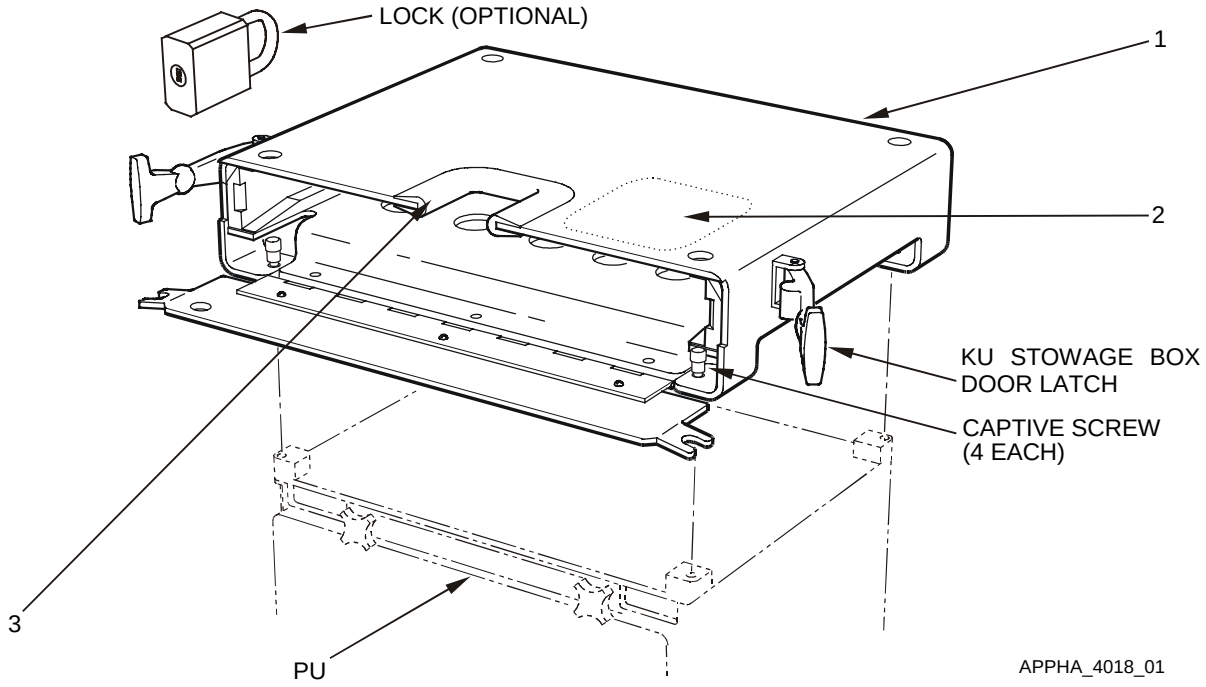

Figure Y-7. Remove and Replace Keyboard Unit (KU) Stowage Box

Key and Parts List for Figure Y-7

ITEM NO.	NOMENCLATURE	CAGE CODE	PART NUMBER	NSN	QTY	SMR
1	Box, KU Stowage	0J198	872845-1	2540-01-481-5744	1	PAODD
2	Label, Keyboard Box	0J198	881323-1		1	PAOZZ
3	Rubber Edge Trim	39428	8507K16	5325-01-435-2840	9	PAOZZ
--	Adhesive	04963	Scotch-Grip Rubber	8040-00-664-4318	1	PAOZZ
--	Case, Keyboard	0J198	872845-11		1	XBOOO
--	Bottom, Stowage Box	0J198	872845-12		1	XBOOO
--	Side Rail, Keybrd Box	0J198	872845-13		1	XBOOO
--	Side Rail, Keybrd Box	0J198	872845-14		1	XBOOO
--	Door, Keyboard Box	0J198	872845-15		1	XBOOO
--	Hinge, Keyboard Box	0J198	872845-16		1	XBOOO
--	Strip, Rubber	0J198	872845-17		1	XBOOO
--	Rivet, Solid, Csk,1/8	96906	MS20426AD-4-5	5320-00-117-6950	6	PAOZZ
--	Screw, Pan Head	96906	MS35206-229	5305-00-984-4989	14	PAOZZ
--	Washer, Flat	96906	MS27183-5	5310-00-983-8483	16	PAOZZ
--	Washer, Lock	96906	MS35338-41	5310-00-045-4007	13	PAOZZ
--	Nut, Plain	96906	MS35649-262	5310-00-934-9747	3	PAOZZ
--	Retainer, Panel Screw	57177	214-03SS10-32		4	PAOZZ
--	Screw, Captive Panel	57177	PH207-05SS1032		4	PAOZZ
--	Grip, Handle Assy	0J198	861867-1		1	XBOOO
--	Grip, Handle	0J198	861869-1		1	XBOZZ
--	Screw, Machine	96906	MS35206-228	5305-00-984-4988	4	PAOZZ
--	Washer, Lock	96906	MS35338-41	5310-00-045-4007	4	PAOZZ
--	Tape, Shielding, Elect	39428	7648A34		1	XBOZZ

Y–6.11 REMOVE/REPLACE KEYBOARD UNIT (KU) STOWAGE BOX DOOR LATCHES

Refer to Figure Y-8.

Y–6.11.1 REMOVE KEYBOARD UNIT (KU) STOWAGE BOX DOOR LATCHES

a. Pull rubber T-handles and unfasten KU stowage box door latches, if necessary.

b. Remove two pan head screws (1), lock washers (2) and flat washers (3) from each KU stowage box door latch (4) using a No. 2 cross-tip screwdriver.

c. Remove KU stowage box door latch (4).

Y–6.11.2 REPLACE KEYBOARD UNIT (KU) STOWAGE BOX DOOR LATCHES

NOTE

The same KU stowage box door latch part is used for each side of the keyboard stowage box. There is a bumper on one side of the latch that should be positioned toward the side of the keyboard stowage box when fastened.

a. Align KU stowage box door latch mounting holes with mounting holes in KU stowage box.

b. Install and tighten two pan head screws (1), lock washers (2) and flat washers (3) for each KU stowage box door latch (4), using a No. 2 cross-tip screwdriver.

c. Pull rubber T-handles and fasten KU stowage box door latches.

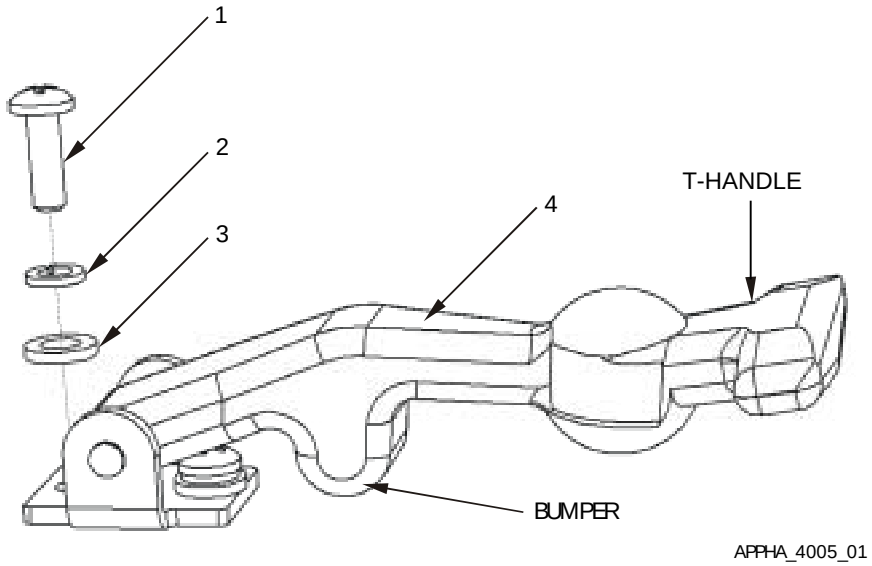

Figure Y-8. Remove and Replace Keyboard Unit (KU) Stowage Box Door Latch

Key and Parts List for Figure Y-8

ITEM NO.	NOMENCLATURE	CAGE CODE	PART NUMBER	NSN	QTY	SMR
1	Screw, Pan Head	96906	MS35206-229	5305-00-984-4989	4	PAOZZ
2	Washer, Lock	96906	MS35338-41	5310-00-045-4007	4	PAOZZ
3	Washer, Flat	96906	MS27183-5	5310-00-983-8483	4	PAOZZ
4	(KU stowage box door latch) Latch, Thumb	94222	37-20-071-20	5340-01-351-3340	2	PAOZZ

This page intentionally left blank.

APPENDIX Z

SUPPLEMENTARY INFORMATION FOR

M35A3 2 ½ TON CARGO CARRIER

TABLE OF CONTENTS

Page

Z–1 GENERAL Z–3

Z–2 COMPONENT ITEM NUMBERS AND PART NUMBERS Z–3

Z–3 SYSTEM INTERFACES Z–3

Z–3.1 MECHANICAL Z–3

Z–3.2 CABLE INTERFACES Z–4

Z–4 COMPONENT LOCATION Z–6

Z–4.1 GENERAL LOCATION Z–6

Z–4.2 MOUNTING Z–7

Z–5 PLATFORM-UNIQUE TROUBLESHOOTING Z–9

Z–6 REMOVAL/REPLACEMENT IN THE PLATFORM Z–9

Z–6.1 FUNCTIONAL CHECK Z–9

Z–6.2 REMOVE/REPLACE W1 POWER CABLE Z–10

Z–6.3 REMOVE/REPLACE W2 DISPLAY CABLE Z–11

Z–6.4 REMOVE/REPLACE W3 SERIAL INTERFACE ADAPTER DEVICE (SIAD) Z–12

Z–6.5 REMOVE/REPLACE W3P PLGR CABLE Z–13

Z–6.6 REMOVE/REPLACE W3N INC CABLE Z–14

Z–6.7 REMOVE/REPLACE PU ISOLATION ASSEMBLY Z–17

Z–6.8 REMOVE/REPLACE DU ISOLATION ASSEMBLY Z–20

Z–6.9 REMOVE/REPLACE RAM-BALL ASSEMBLY Z–24

Z–6.10 REMOVE/REPLACE KEYBOARD UNIT (KU) STOWAGE BOX Z–26

Z–6.11 REMOVE/REPLACE KEYBOARD UNIT (KU) STOWAGE BOX DOOR LATCHES Z–29

LIST OF ILLUSTRATIONS

Page
Figure Z-1. Equipment Interface Block Diagram Z–5
Figure Z-2. Relative Component Locations Z–6
Figure Z-3. PU, PU Isolation Assembly, and KU Stowage Box Mounting Z–7
Figure Z-4. Dash-Mounted DU, DU Isolation Assembly, and RAM-Ball Assembly Z–8
Figure Z-5. Cable Run - Roadside Z–15
Figure Z-6. Cable Run - Curbside Z–16
Figure Z-7. Remove and Replace PU Isolation Assembly Z–19
Figure Z-8. Remove and Replace DU Isolation Assembly and RAM-Ball Assembly Z–22
Figure Z-9. Remove and Replace Keyboard Unit (KU) Stowage Box Z–27
Figure Z-10. Remove and Replace Keyboard Unit (KU) Stowage Box Door Latches Z–30

Z–1 GENERAL

This appendix describes the interfaces between the FBCB2 equipment and the M35A3 2 ½ Ton Cargo Carrier. This appendix also identifies the component parts of the M35A3 platform installation kit and details the removal and replacement procedures particular to the M35A3 2 ½ Ton.

Z–2 COMPONENT ITEM NUMBERS AND PART NUMBERS

Key and Parts List tables contained in the Removal and Replacement section of this Appendix serve a dual purpose. Use the Item Numbers in the Key to identify components and attaching hardware shown in the Figures illustrating the tasks. The nomenclature and part number for the hardware and equipment mounting components of the installation kit also are keyed to the Item Numbers in the tables. Additional parts ordering information, such as Contractor and Government Entity code (CAGE); National Stock Number (NSN); quantity; and Source, Maintenance and Recoverability (SMR) codes, are provided. The Key and Parts List tables follow the task illustrations.

Z–3 SYSTEM INTERFACES

Z–3.1 MECHANICAL

The mechanical hardware-to-hardware interfaces include:

a. Cables

b. Processor Unit (PU)

c. Display Unit (DU)

d. Keyboard Unit (KU)

Z–3.2 CABLE INTERFACES

Figure Z-1 illustrates a block diagram of the interface between FBCB2 equipment and the M35A3 2 ½ Ton (Platform). Figure Z-1 also illustrates the signal and control interfaces along with the terminal connector labels (e.g., P1, P2). The purpose of each cable is listed below:

Cable Name	Purpose
W1–Cable	Supplies vehicle power (28 VDC) to the AN/UYK-128(V) computer and its subassemblies.
W2–Cable	Supplies power and signals to the Display Unit (DU) and Keyboard Unit (KU). Returns Man Machine Interface (MMI) information from the KU to the Processor Unit (PU).
W3–Cable	The Serial Interface Adapter Device (SIAD) is a conduit assembly that breaks out each of the serial interface ports to a connector.
W3P–Cable	Collects position and time information from the PLGR.
W3N–Cable	Provides duplex communication between the PU, Internet Controller (INC), and radios.
W4–Cable	Audio cable (This cable is not used in this platform).
W5–Cable	The Expansion Interface Adapter Device (EIAD) is connected to the Universal Serial Bus (USB) connector only when this vehicle is to be used in a Tactical Operations Center (TOC) setup. When used in this configuration, the EIAD is connected between the PU J5 connector and local router.
Ground Strap	Provides safety ground for the PU.
Ground Strap	Provides safety ground for the DU.

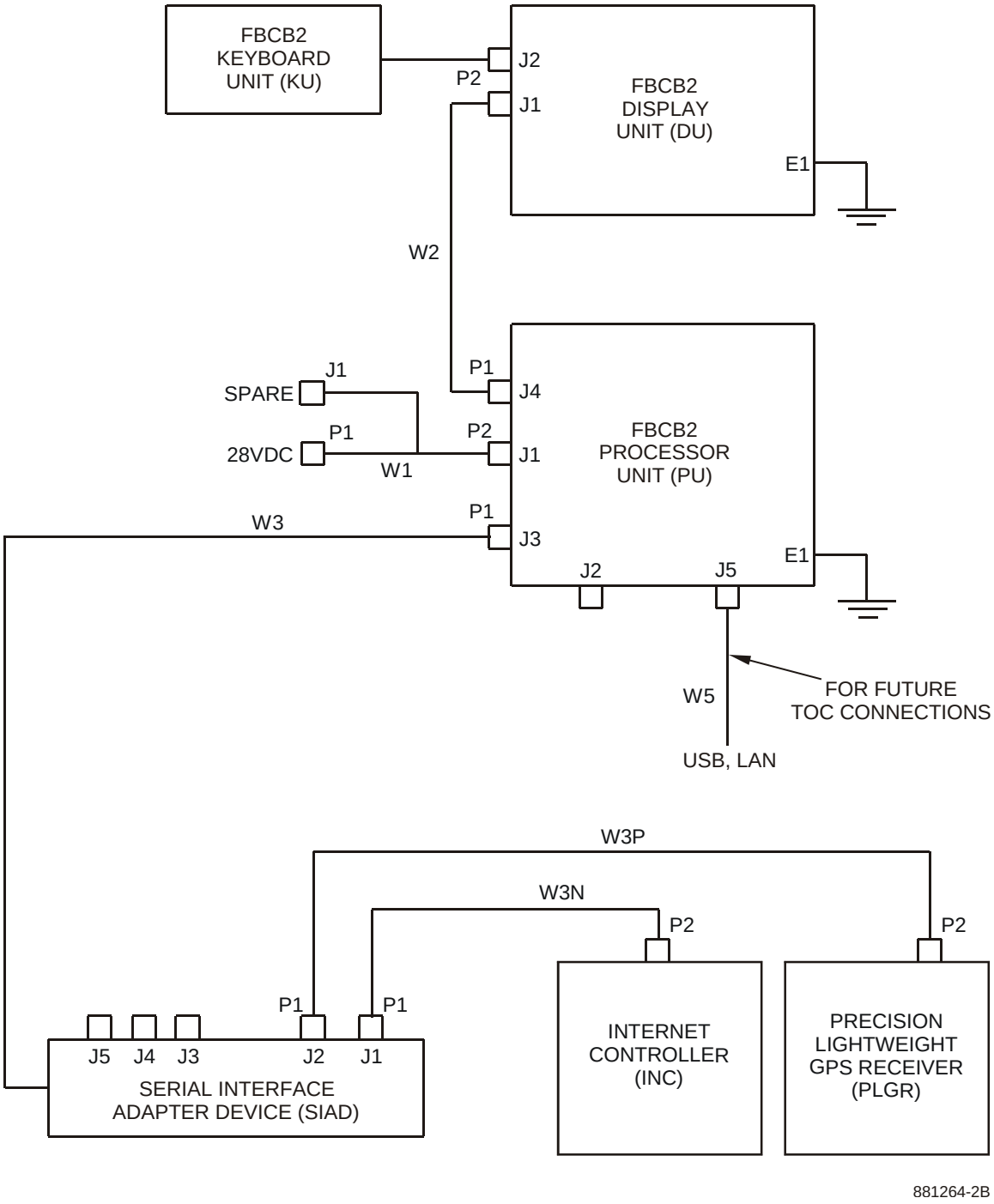

Figure Z-1. Equipment Interface Block Diagram

Z–4 COMPONENT LOCATION

Z–4.1 GENERAL LOCATION

Figure Z-2 shows the relative locations of the FBCB2 computer equipment and mounting components in the cab of the M35A3 2 ½ Ton Cargo Carrier platform.

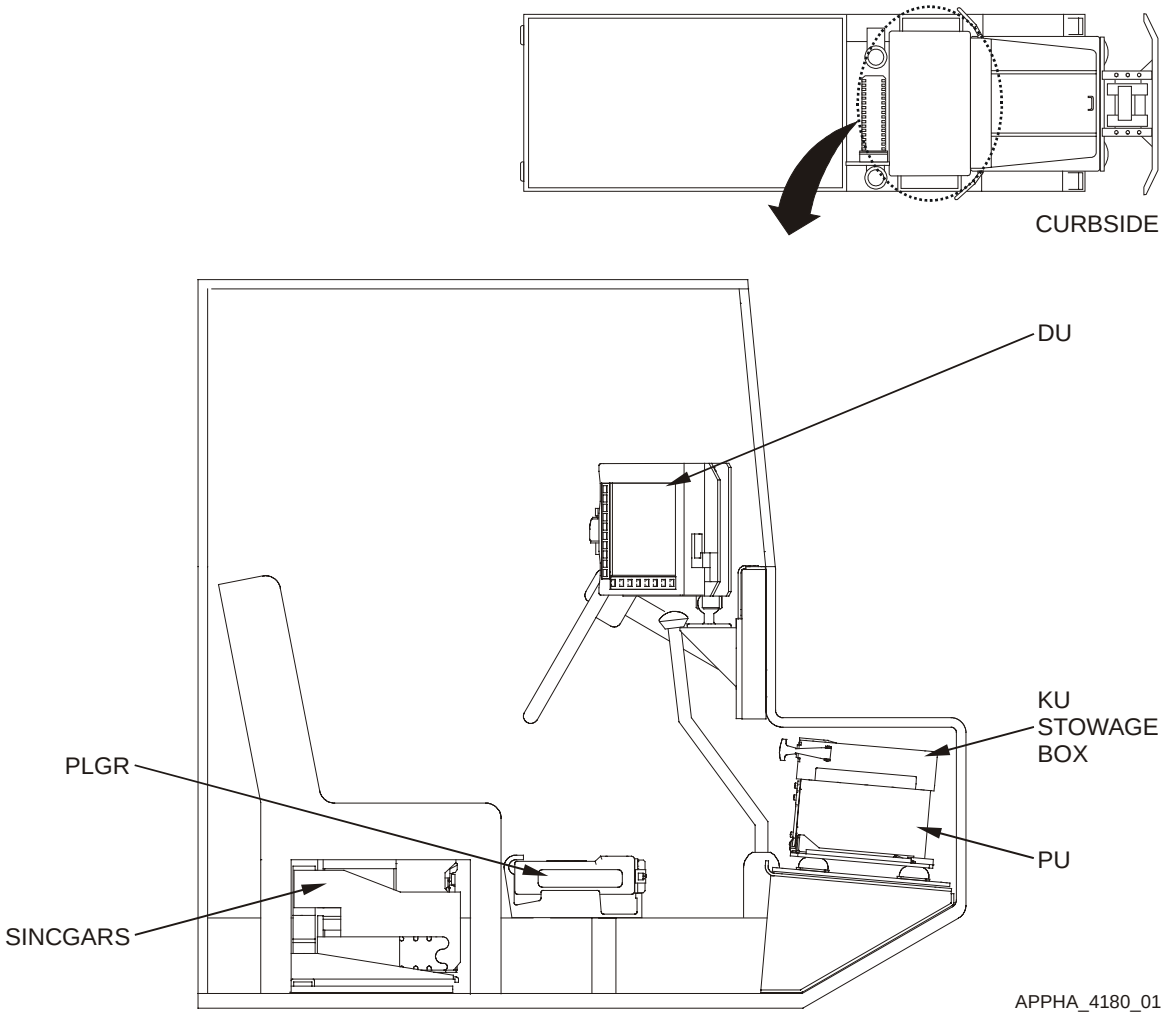

Figure Z-2. Relative Component Locations

Z–4.2 MOUNTING

Z–4.2.1 PU AND KU STOWAGE BOX MOUNTING

Figure Z-3 illustrates the PU and the PU isolation assembly mounted on the PU mounting bracket in the passenger side foot well of the M35A3 2 ½ Ton platform. The KU stowage box is mounted on top of the PU.

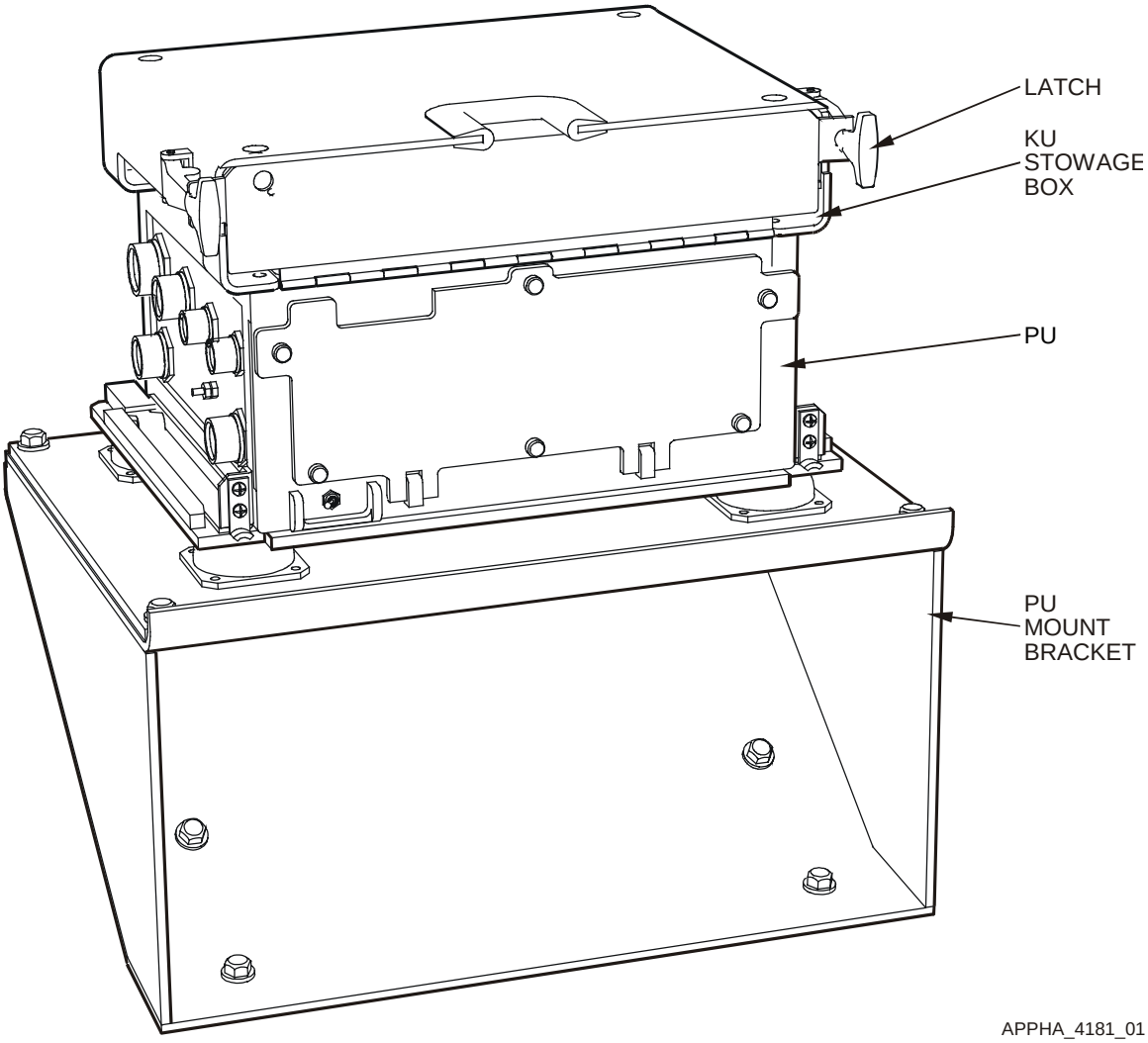

Figure Z-3. PU, PU Isolation Assembly, and KU Stowage Box Mounting

Z–4.2.2 DU MOUNTING

Figure Z-4 illustrates how the DU is mounted with a RAM-Ball assembly to the display bracket attached to the dashboard of the M35A3 2 ½ Ton platform.

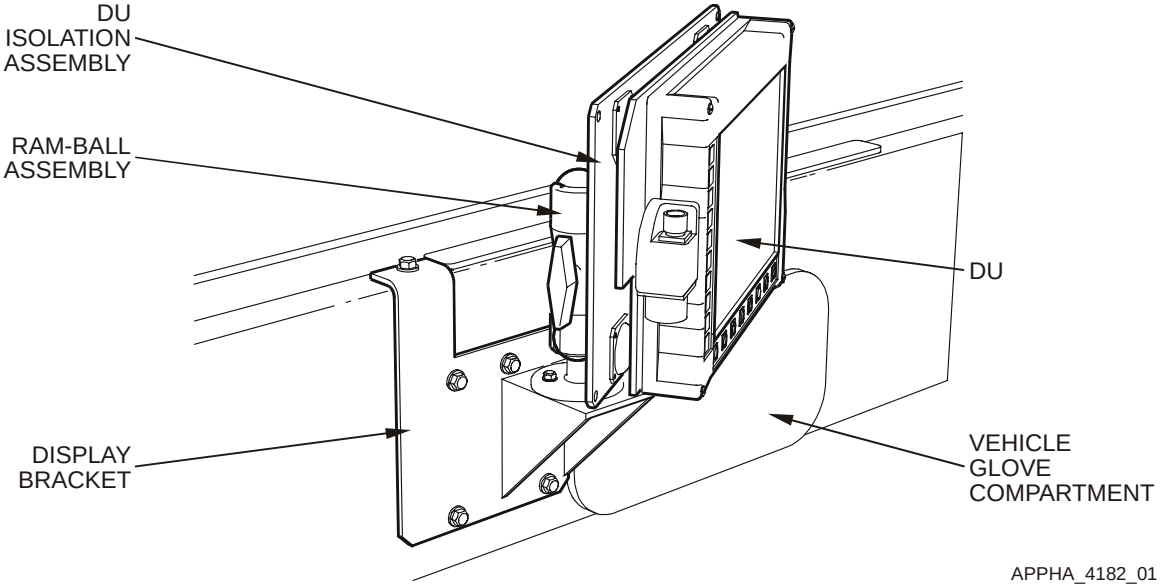

Figure Z-4. Dash-Mounted DU, DU Isolation Assembly, and RAM-Ball Assembly

Z–5 PLATFORM-UNIQUE TROUBLESHOOTING

On the left side of the SINCGARS radio rack underneath the passenger seat is a power junction box. The power junction box has three circuit breakers which face the rear of the rack. These circuit breakers are CB1 to the right, CB2 center, and CB3 to the left. CB2 controls power to the AN/UYK-128(V) computer, and CB3 controls power to the SINCGARS radio. Be aware of these controls during power up, power down, and troubleshooting.

Z–6 REMOVAL/REPLACEMENT IN THE PLATFORM

Most installations must be tailored to the platform. Cables and brackets are unique to the installation. Before a part or assembly is removed from a vehicle, fill out a “Maintenance Request” DA Form 2407. One copy of this completed form must remain with the vehicle and the remaining copies must be kept with the failed component. To prove the operability of the system after an item is replaced, perform the system Functional Check.

Z–6.1 FUNCTIONAL CHECK

Z–6.1.1 POWER UP

Power up and initialize all interface equipment and the AN/UYK-128(V) In Accordance With (IAW) Operator’s Manual TM 11-7010-326-10, or Pocket Guide TB 11-7010-326-10.

Z–6.1.2 VERIFICATION

NOTE

Observe that the Display Unit PWR, DISP and CPU green LED lights are lit.

a. Observe that the PLGR synchronizes with PU, indicated by the PLGR dialog box showing green.

b. Observe that the Router synchronizes with the PU, indicated by the Router dialog box showing green.

c. At the Session Manager screen, select OPS button to display the OPS screen.

d. Verify the GPS status is either green or amber on the Classification/Status Bar.

e. Verify the Communications status is either green or amber on the Classification/Status Bar.

Z–6.1.3 POWER DOWN

Power down all interface equipment and the AN/UYK-128(V) IAW the Operator’s Manual TM 11-7010-326-10, or Pocket Guide TB 11-7010-326-10.

Z–6.2 REMOVE/REPLACE W1 POWER CABLE

Refer to Figure Z-5 and Figure Z-6.

Z–6.2.1 REMOVE W1 POWER CABLE

WARNING

Before conducting maintenance involving the removal and replacement of system components, ensure that all power to the FBCB2 system is off (including power from the vehicle). Failure to comply with warning may result in equipment damage or injury to personnel.

a. Power down AN/UYK-128(V) system IAW Operator's Manual TM 11-7010-326-10, or Pocket Guide TB 11-7010-326-10.

b. Power down SINCGARS IAW TM 11-5820-890-10-8.

c. Disconnect W1-P1 cable connector from the SINCGARS Mounting Base (MB) (MT-6352/VRC) A4-J2 connector.

d. Disconnect W1-P2 cable connector from PU J1 connector.

e. Install protective cap on PU J1 connector.

NOTE

Note cable routing and tie-wrap locations before removing cable or tie-wraps.

f. Remove tie-wraps securing W1 cable using diagonal wire cutters.

g. Remove W1 power cable (2).

Z–6.2.2 REPLACE W1 POWER CABLE

a. Route W1 power cable (2).

b. Remove protective cap from PU J1 connector.

c. Connect W1-P2 cable connector to PU J1 connector.

d. Connect W1-P1 cable connector to SINCGARS Mounting Base (MB) (MT-6352A/VRC) A4-J2 connector.

e. Secure W1 cable using tie-wraps, as applicable.

f. Dress tie-wraps using diagonal wire cutters.

g. Perform Functional Check IAW paragraph Z–6.1

Z–6.3 REMOVE/REPLACE W2 DISPLAY CABLE

Refer to Figure Z-5 and Figure Z-6.

Z–6.3.1 REMOVE W2 DISPLAY CABLE

WARNING

Before conducting maintenance involving the removal and replacement of system components, ensure that all power to the FBCB2 system is off (including power from the vehicle). Failure to comply with warning may result in equipment damage or injury to personnel.

a. Power down AN/UYK-128(V) system IAW Operator's Manual TM 11-7010-326-10, or Pocket Guide TB 11-7010-326-10.

b. Disconnect W2-P1 cable connector from PU J4 connector.

c. Install protective cap on PU J4 connector.

d. Disconnect W2-P2 cable connector from display J1 connector.

e. Install protective cap on display J1 connector.

NOTE

Note cable routing and tie-wrap locations before removing cable or tie-wraps.

NOTE

Ground strap may be wound around the W2 cable. It may be necessary to remove the ground strap from the DU ground stud and unwind before removing the W2 cable.

f. Remove tie-wraps from W2 cable and ground strap using diagonal wire cutters.

g. Remove W2 display cable (1).

Z–6.3.2 REPLACE W2 DISPLAY CABLE

a. Route W2 display cable (1).

b. Remove protective cap from display J1 connector.

c. Connect W2-P2 cable connector to display J1 connector.

d. Remove protective cap from PU J4 connector.

e. Connect W2-P1 cable connector to PU J4 connector.

NOTE

To take up slack, the ground strap may be wound around the W2 cable before connecting it to the DU ground stud.

f. Secure W2 cable and ground strap using tie-wraps.

g. Dress tie-wraps using diagonal wire cutters.

h. Perform Functional Check IAW paragraph Z–6.1.

Z–6.4 REMOVE/REPLACE W3 SERIAL INTERFACE ADAPTER DEVICE (SIAD)

Refer to Figure Z-5 and Figure Z-6.

Z–6.4.1 REMOVE W3 SERIAL INTERFACE ADAPTER DEVICE (SIAD)

WARNING

Before conducting maintenance involving the removal and replacement of system components, ensure that all power to the FBCB2 system is off (including power from the vehicle). Failure to comply with warning may result in equipment damage or injury to personnel.

a. Power down AN/UYK-128(V) system IAW Operator's Manual TM 11-7010-326-10, or Pocket Guide TB 11-7010-326-10.

b. Disconnect W3N-P1 INC cable connector from W3 SIAD J1 connector.

c. Disconnect W3P-P1 PLGR cable connector from W3 SIAD J2 connector.

d. Disconnect W3 SIAD-P1 cable connector from PU J3 connector.

e. Install protective cap on PU J3 connector.

NOTE

Note cable routing and tie-wrap locations before removing cable or tie-wraps.

f. Remove tie-wraps securing W3 SIAD using diagonal wire cutters.

g. Remove W3 SIAD (4).

Z–6.4.2 REPLACE W3 SERIAL INTERFACE ADAPTER DEVICE (SIAD)

a. Route W3 SIAD (4) into original position.

b. Remove protective cap from PU J3 connector.

c. Connect W3 SIAD-P1 cable connector to PU J3 connector.

d. Connect W3P-P1 PLGR cable connector to W3 SIAD J2 connector.

e. Connect W3N-P1 INC cable connector to W3 SIAD J1 connector.

f. Secure W3 SIAD using tie-wraps.

g. Dress tie-wraps using diagonal wire cutters.

h. Perform Functional Check IAW paragraph Z–6.1.

Z–6.5 REMOVE/REPLACE W3P PLGR CABLE

Refer to Figure Z-5 and Figure Z-6.

Z–6.5.1 REMOVE W3P PLGR CABLE

WARNING

Before conducting maintenance involving the removal and replacement of system components, ensure that all power to FBCB2 system is off (including power from the vehicle). Failure to comply with warning may result in equipment damage or injury to personnel.

a. Power down AN/UYK-128(V) system IAW Operator's Manual TM 11-7010-326-10, or Pocket Guide TB 11-7010-326-10.

b. Disconnect W3P-P1 cable connector from W3 SIAD J2 connector.

c. Unfasten over-center latch and remove PLGR from mounting bracket.

d. Disconnect W3P-P2 cable connector from PLGR J2 connector using offset flat-tip screwdriver.

NOTE

Note cable routing and tie-wrap locations before removing cable or tie-wraps.

e. Remove tie-wraps securing W3P cable using diagonal wire cutters.

f. Remove W3P cable (5).

Z–6.5.2 REPLACE W3P PLGR CABLE

a. Route W3P cable (5).

b. Connect W3P-P2 cable connector to PLGR J2 connector using offset flat-tip screwdriver.

c. Install PLGR in mounting bracket and fasten over-center latch.

d. Connect W3P-P1 cable connector to W3 SIAD J2 connector.

e. Secure W3P cable using tie-wraps.

f. Dress tie-wraps using diagonal wire cutters.

g. Perform Functional Check IAW paragraph Z–6.1.

Z–6.6 REMOVE/REPLACE W3N INC CABLE

Refer to Figure Z-5 and Figure Z-6.

Z–6.6.1 REMOVE W3N INC CABLE

WARNING

Before conducting maintenance involving the removal and replacement of system components, ensure that all power to the FBCB2 system is off (including power from the vehicle). Failure to comply with warning may result in equipment damage or injury to personnel.

a. Power down AN/UYK-128(V) system IAW Operator's Manual TM 11-7010-326-10, or Pocket Guide TB 11-7010-326-10.

b. Disconnect W3N-P1 cable connector from W3 SIAD J1 connector.

c. Disconnect W3N-P2 cable connector from SINCGARS INC A2-J6 connector.

NOTE

Note cable routing and tie-wrap locations before removing cable or tie-wraps.

d. Remove tie-wraps securing W3N cable using diagonal cutters.

e. Remove W3N cable (3).

Z–6.6.2 REPLACE W3N INC CABLE

a. Route W3N cable (3).

b. Connect W3N-P2 cable connector to SINCGARS INC A2-J6 connector.

c. Connect W3N-P1 cable connector to W3 SIAD J1 connector.

d. Secure W3N cable using tie-wraps.

e. Dress tie-wraps using diagonal wire cutters.

f. Perform Functional Check IAW paragraph Z–6.1.

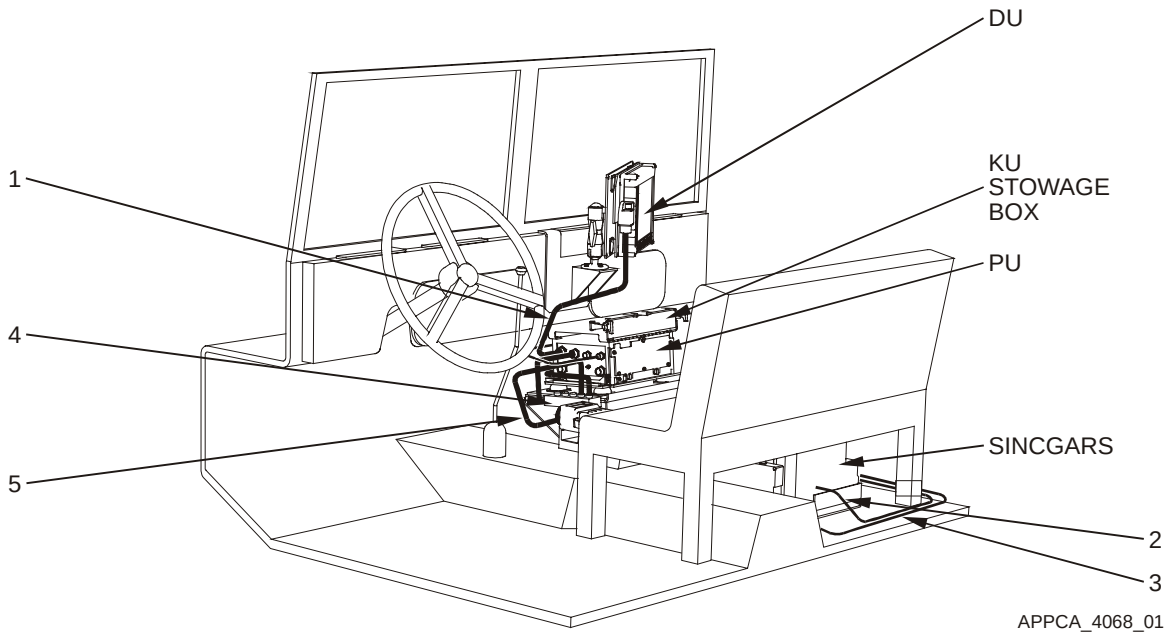

Figure Z-5. Cable Run - Roadside

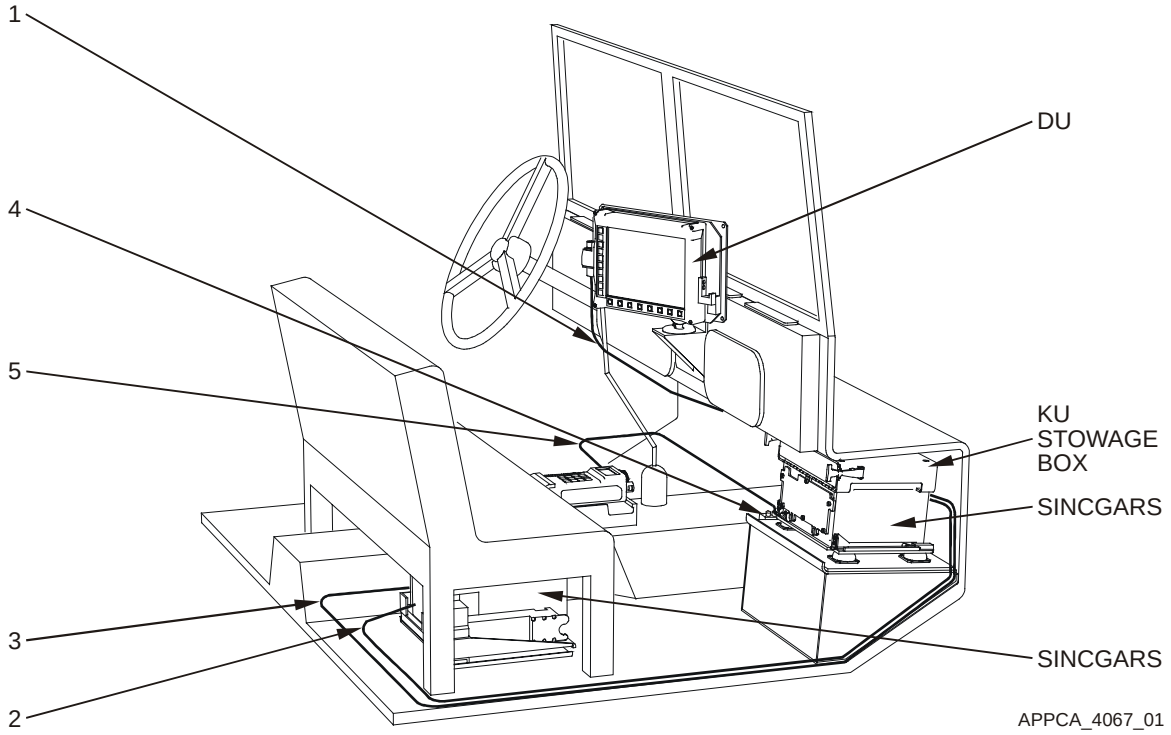

Figure Z-6. Cable Run - Curbside

Key and Parts List for Figure Z-5 and Figure Z-6

ITEM NO.	NOMENCLATURE	CAGE CODE	PART NUMBER	NSN	QTY	SMR
1	Cable Assembly W2	0J198	881327-1	5995-01-478-4876	1	PAODD
2	Cable Assembly W1	0J198	866003-2	5995-01-478-4903	1	PAODD
3	Cable Assembly W3N	0J198	881336-3	5995-01-478-5080	1	PAODD
4	Adapter Assy SIAD W3	0J198	881331-1	4920-01-478-3722	1	PAODD
5	Cable Assembly W3P	0J198	881335-2	5995-01-478-4893	1	PAODD
--	Strap, Tie Down, Elect	39428	7130K31		A/R	PAOZZ

Z–6.7 REMOVE/REPLACE PU ISOLATION ASSEMBLY

Refer to Figure Z-7.

NOTE

Ground straps are attached to components at one end (PU and DU) and a frame ground at the other end. Regardless of where the ground strap terminates, it is usually a burnished (void of paint) area. If the ground strap is removed from a burnished area, make sure to return it to the same burnished area. Where applicable, always connect the ground strap first when assembling, and disconnect the ground strap last when disassembling.

Z–6.7.1 REMOVE PU ISOLATION ASSEMBLY

WARNING

Before conducting maintenance involving the removal and replacement of system components, ensure that all power to the FBCB2 system is off (including power from the vehicle). Failure to comply with warning may result in equipment damage or injury to personnel.

a. Power down AN/UYK-128(V) system IAW Operator's Manual TM 11-7010-326-10, or Pocket Guide TB 11-7010-326-10.

NOTE

Do not remove the Removable Hard Disk Drive Cartridge (RHDDC), locking bracket, or keyboard stowage box from PU.

b. Remove PU IAW Unit Maintenance Manual TM 11-7010-326-20&P, Chapter 2.

c. Remove one hex head screw (6), ground strap, flat washer (5), lock washer (4), and hex nut (3) from PU isolation assembly (1) bottom plate and PU mounting bracket (2) using a 7/16" open-end wrench and 7/16" socket with ratchet.

d. Remove remaining three hex head screws (6), flat washers (5), lock washers (4), and hex nuts (3) from PU isolation assembly (1) bottom plate and PU mounting bracket (2) using a 7/16" open-end wrench and 7/16" socket with ratchet.

e. Remove PU isolation assembly (1) from PU mounting bracket (2).

Z–6.7.2 REPLACE PU ISOLATION ASSEMBLY

a. Align four holes in PU isolation assembly (1) bottom plate with PU mounting bracket (2) holes.

NOTE

To ensure positive ground, PU ground strap must make direct contact with bare metal. Ensure PU ground strap is installed in its original location at the PU isolation assembly bottom plate mounting hole. Slip the ground strap on the mounting screw and insert the screw before installing the flat washer and lock washer and tightening nut from underneath.

b. Install one hex head screw (6), ground strap, flat washer (5), lock washer (4), and hex nut (3) on PU isolation assembly (1) bottom plate and PU mounting bracket (2) using a 7/16” open-end wrench and 7/16” socket with ratchet.

c. Install remaining three hex head screws (6), flat washers (5), lock washers (4), and hex nuts (3) on PU isolation assembly (1) bottom plate and PU mounting bracket (2) using a 7/16” open-end wrench and 7/16” socket with ratchet.

d. Install PU IAW Unit Maintenance Manual TM 11-7010-326-20&P, Chapter 2.

e. Perform Functional Check IAW paragraph Z–6.1.

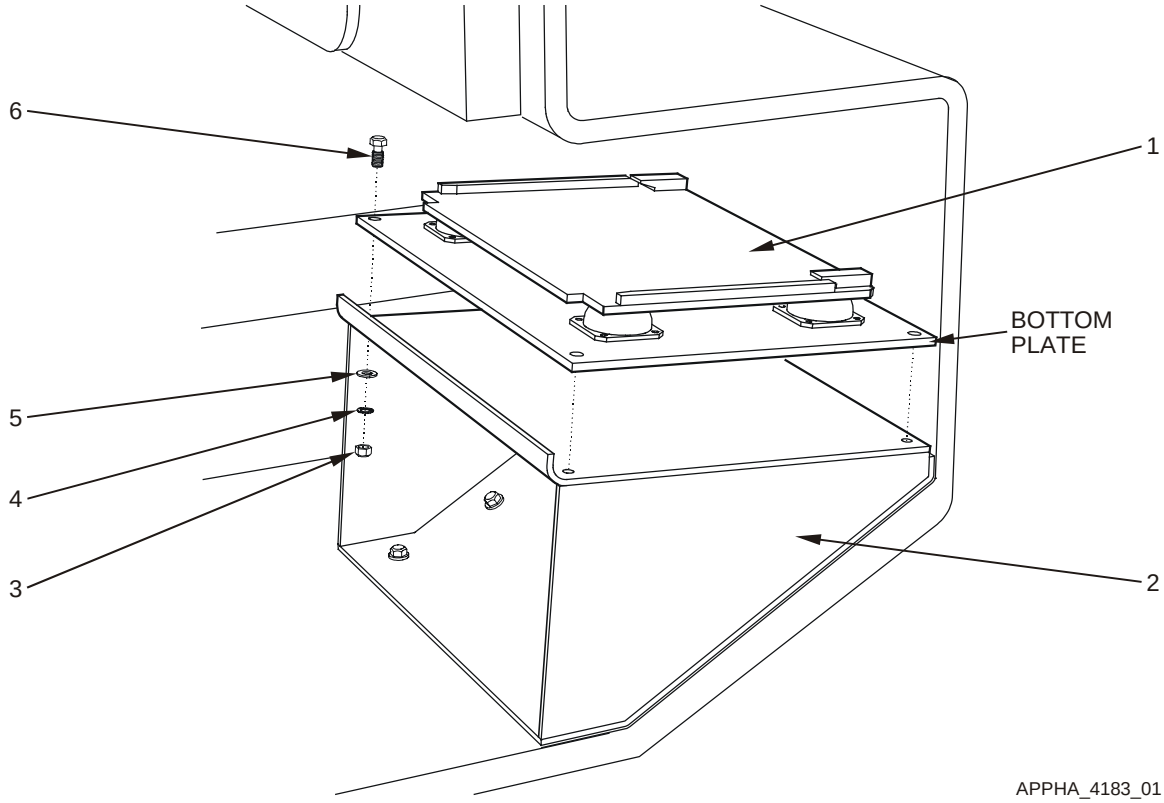

Figure Z-7. Remove and Replace PU Isolation Assembly

Key and Parts List for Figure Z-7

ITEM NO.	NOMENCLATURE	CAGE CODE	PART NUMBER	NSN	QTY	SMR
1	(PU Isolation Assembly) Plate, Resilient Mount PU	0J198	872826-1	5340-01-481-5742	1	PAODD
2	Bracket, PU Mounting	0J198	866015-1		1	PAOZZ
3	Nut, Plain, Hexagon	96906	MS35649-2252	5310-00-997-1888	4	PAOZZ
4	Washer, Lock	96906	MS35338-44	5310-00-582-5965	4	PAOZZ
5	Washer, Flat	96906	MS27183-10	5310-00-809-4058	4	PAOZZ
6	Screw, Cap, Hex Head	80204	B1821AH025C100N	5305-01-389-7984	4	PAOZZ
--	Assembly, PU Lock	0J198	861865-1		1	XBOOO
--	Bracket, Locking	0J198	861871-1		1	XBOZZ
--	Screw	80205	MS35190-253	5305-00-059-4568	2	PAOZZ

Z–6.8 REMOVE/REPLACE DU ISOLATION ASSEMBLY

Refer to Figure Z-8.

NOTE

Ground straps are attached to components at one end (PU and DU) and a frame ground at the other end. Regardless of where the ground strap terminates, it is usually a burnished (void of paint) area. If the ground strap is removed from a burnished area, make sure to return it to the same burnished area. Where applicable, always connect the ground strap first when assembling, and disconnect the ground strap last when disassembling.

Z–6.8.1 REMOVE DU ISOLATION ASSEMBLY

WARNING

Before conducting maintenance involving the removal and replacement of system components, ensure that all power to the FBCB2 system is off (including power from the vehicle). Failure to comply with warning may result in equipment damage or injury to personnel.

a. Power down AN/UYK-128(V) system IAW Operator's Manual TM 11-7010-326-10, or Pocket Guide TB 11-7010-326-10.

b. Remove DU IAW Unit Maintenance Manual TM 11-7010-326-20&P, Chapter 2.

NOTE

Note cable routing and tie-wrap locations before removing cable or tie-wraps.

c. Remove tie-wraps securing W2 display cable and ground strap to DU isolation assembly using diagonal wire cutters.

d. Loosen RAM-Ball knob while supporting DU isolation assembly (5) until RAM-Ball display base with ball can be lifted free of RAM-Ball socket arm.

e. Remove four self-locking wing nuts (18), lock washers (19), flat washers (20) and square neck bolts (6) from display adapter plate (4) and DU isolation assembly (5) bottom plate.

f. Remove DU isolation assembly (5) from display adapter plate (4) with attached RAM-Ball display base with ball.

Z–6.8.2 REPLACE DU ISOLATION ASSEMBLY

a. Align four holes in display adapter plate (4) with slots in DU isolation assembly (5) bottom plate.

b. Install four square neck bolts (6), flat washers (20), lock washers (19), and self-locking wing nuts (18) in display adapter plate (4) and DU isolation assembly (5) bottom plate.

CAUTION

Ensure RAM-Ball is free of dirt and contaminants before reassembling. Failure to comply can result in slippage or excess wear of RAM-Ball assembly.

c. Inspect and clean RAM-Ball socket arm and display base with ball, as necessary, using clean lint-free wipes.

d. Insert RAM-Ball display base with ball into RAM-Ball socket arm while supporting DU isolation assembly (5).

e. Adjust viewing angle and tighten RAM-Ball knob.

f. Secure W2 display cable and ground strap to DU isolation assembly (5) bottom plate using tie-wraps.

g. Dress tie-wraps using diagonal wire cutters.

h. Replace DU IAW Unit Maintenance Manual TM 11-7010-326-20&P, Chapter 2.

i. Perform Functional Check IAW paragraph Z–6.1.

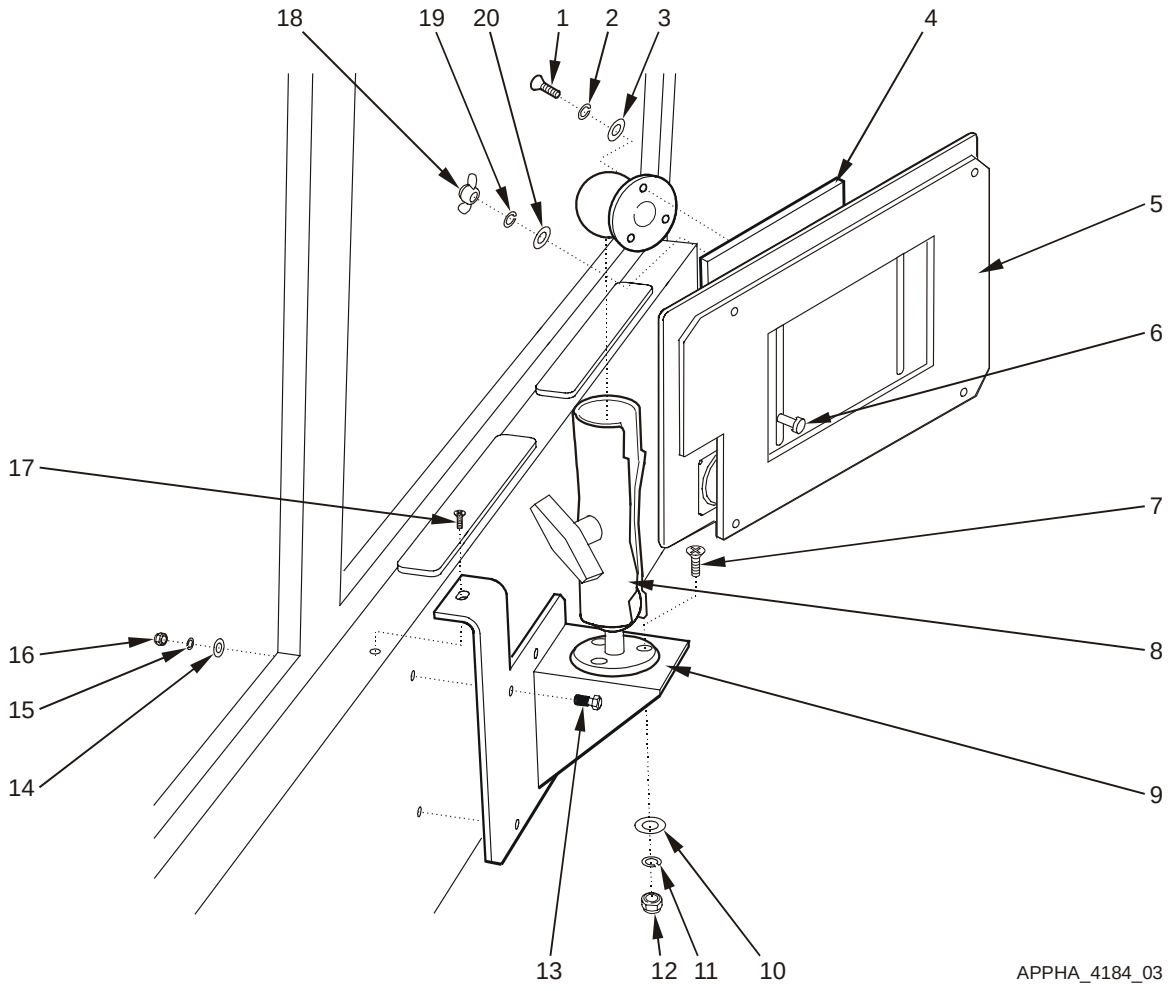

Figure Z-8. Remove and Replace DU Isolation Assembly and RAM-Ball Assembly

Key and Parts List for Figure Z-8

ITEM NO.	NOMENCLATURE	CAGE CODE	PART NUMBER	NSN	QTY	SMR
1	Screw, Pan Head	96906	MS35207-264	5305-00-989-7435	3	PAOZZ
2	Washer, Lock	96906	MS35338-43	5310-00-045-3296	3	PAOZZ
3	Washer, Flat	96906	MS27183-8	5310-00-809-8546	3	PAOZZ
4	(Display Adapter Plate) Bracket, DU Mounting	0J198	872875-1		1	XBOOO
5	(DU Isolation Assembly) Plate, Resilient Mount DU	0J198	872870-1		1	PAODD
6	Bolt, Square Neck	96906	MS35751-17	5306-00-889-2943	4	PAOZZ
7	Screw, Pan Head	96906	MS35207-265	5305-00-993-1848	3	PAOZZ
8	Mount, RAM-Ball	0J198	889498-1		1	PAOZZ
9	Bracket, Display	0J198	866014-1		1	XBOZZ
10	Washer, Flat	96906	MS27183-8	5310-00-809-8546	3	PAOZZ
11	Washer, Lock	96906	MS35338-43	5310-00-045-3296	3	PAOZZ
12	Nut, Plain, Hexagon	96906	MS35650-302	5310-00-934-9751	3	PAOZZ
13	Screw, Cap, Hexagon	80204	B1821AH025C075N	5305-01-389-8000	5	PAOZZ
14	Washer, Flat	96906	MS27183-10	5310-00-809-4058	5	PAOZZ
15	Washer, Lock	96906	MS35338-44	5310-00-582-5965	5	PAOZZ
16	Nut, Plain, Hexagon	96906	MS35649-2252	5310-00-997-1888	5	PAOZZ
17	Screw, Machine	39428	90410A245		1	PAOZZ
18	Nut, Self-Locking, Wing	96906	MS51553-420	5310-01-384-2546	4	PAOZZ
19	Washer, Lock	96906	MS35338-44	5301-00-582-5965	4	PAOZZ
20	Washer, Flat	96906	MS27183-10	5301-00-809-4058	4	PAOZZ
--	Assembly, Lock DU	0J198	872843-1		1	XBOOO
--	Bracket, Locking	0J198	861871-3		1	XBOZZ
--	Washer, Lock	96906	MS35338-42	5310-00-045-3299	2	PAOZZ
--	Screw	80205	MS35190-253	5305-00-059-4568	2	PAOZZ

Z–6.9 REMOVE/REPLACE RAM-BALL ASSEMBLY

Refer to Figure Z-8.

NOTE

Ground straps are attached to components at one end (PU and DU) and a frame ground at the other end. Regardless of where the ground strap terminates, it is usually a burnished (void of paint) area. If the ground strap is removed from a burnished area, make sure to return it to the same burnished area. Where applicable, always connect the ground strap first when assembling, and disconnect the ground strap last when disassembling.

Z–6.9.1 REMOVE RAM-BALL ASSEMBLY

WARNING

Before conducting maintenance involving the removal and replacement of system components, ensure that all power to the FBCB2 system is off (including power from the vehicle). Failure to comply with warning may result in equipment damage or injury to personnel.

a. Power down AN/UYK-128(V) system IAW Operator's Manual TM 11-7010-326-10, or Pocket Guide TB 11-7010-326-10.

b. Remove DU IAW Unit Maintenance Manual TM 11-7010-326-20&P, Chapter 2.

NOTE

Note cable routing and tie-wrap locations before removing cable or tie-wraps.

c. Remove tie-wraps securing W2 display cable and ground strap to DU isolation assembly using diagonal wire cutters.

d. Loosen RAM-Ball knob while supporting DU isolation assembly until RAM-Ball display base with ball can be lifted free of RAM-Ball socket arm.

e. Remove RAM-Ball socket arm from RAM-Ball mounting base with ball on display bracket (9).

f. Remove three pan head screws (7), flat washers (10), lock washers (11), and hex nuts (12) from RAM-Ball mounting base with ball and display bracket (9) using a No. 2 cross-tip screwdriver and a 3/8" open-end wrench.

g. Remove RAM-Ball mounting base with ball from display bracket (9).

h. Remove three pan head screws (1), lock washers (2), and flat washers (3) from RAM-Ball display base with ball and display adapter plate (4) using a No. 3 cross-tip screwdriver.

i. Remove RAM-Ball display base with ball from display adapter plate (4).

Z–6.9.2 REPLACE RAM-BALL ASSEMBLY

a. Align three holes in RAM-Ball mounting base with ball with display bracket (9) installation holes.

b. Install three pan head screws (7), flat washers (10), lock washers (11), and hex nuts (12) in RAM-Ball mounting base with ball and display bracket (9) using a No. 2 cross-tip screwdriver and 3/8” open-end wrench.

CAUTION

Ensure RAM-Ball is free of dirt and contaminants before reassembling. Failure to comply can result in slippage or excess wear of RAM-Ball assembly.

c. Inspect and clean RAM-Ball socket arm, display and mounting base with ball, as necessary, using clean lint-free wipes.

d. Install RAM-Ball socket arm on RAM-Ball mounting base with ball.

e. Align three holes in RAM-Ball display base with ball with display adapter plate (4) installation holes.

f. Install three pan head screws (1), lock washers (2), and flat washers (3) in RAM-Ball display base with ball and display adapter plate (4) using a No. 3 cross-tip screwdriver.

g. Insert RAM-Ball display base with ball into RAM-Ball socket arm.

h. Adjust viewing angle and tighten RAM-Ball knob.

i. Install DU IAW Unit Maintenance Manual TM 11-7010-326-20&P, Chapter 2.

j. Secure W2 display cable and ground strap to DU isolation assembly using tie-wraps.

k. Dress tie-wraps using diagonal wire cutters.

l. Perform Functional Check IAW paragraph Z–6.1.

Z–6.10 REMOVE/REPLACE KEYBOARD UNIT (KU) STOWAGE BOX

Refer to Figure Z-9.

Z–6.10.1 REMOVE KEYBOARD UNIT (KU) STOWAGE BOX

a. Remove keyboard from stowage box, if stowed.

NOTE

The following task requires two persons.

b. Loosen two self-locking front retainers on PU until sleeve clears front hook IAW Unit Maintenance Manual TM 11-7010-326-20&P, Chapter 2.

c. Slide PU with KU stowage box forward within guides to access the four captive screws (2) on stowage box.

d. Have second person loosen four KU stowage box captive screws (2) until the captive screws move freely using a No. 2 cross-tip screwdriver.

e. Remove KU stowage box (1) from PU.

f. Slide PU back into place until mounting brackets seat in rear retainers.

g. Slide self-locking front retainer sleeves over hooks and secure.

Z–6.10.2 REPLACE KEYBOARD UNIT (KU) STOWAGE BOX

NOTE

The following task requires two persons.

a. Loosen two self-locking front retainers on PU until sleeve clears front hook IAW Unit Maintenance Manual TM 11-7010-326-20&P, Chapter 2.

b. Slide PU forward within guides to access the four captive screw installation holes on the PU.

c. Align four KU stowage box captive screws (2) with PU installation holes.

d. Have second person tighten four captive screws (2) using a No. 2 cross-tip screwdriver.

e. Slide PU back into place until mounting brackets seat in rear retainers IAW Unit Maintenance Manual TM 11-7010-326-20&P, Chapter 2.

f. Slide self-locking front retainer sleeves over hooks and secure.

g. Stow keyboard, if necessary.

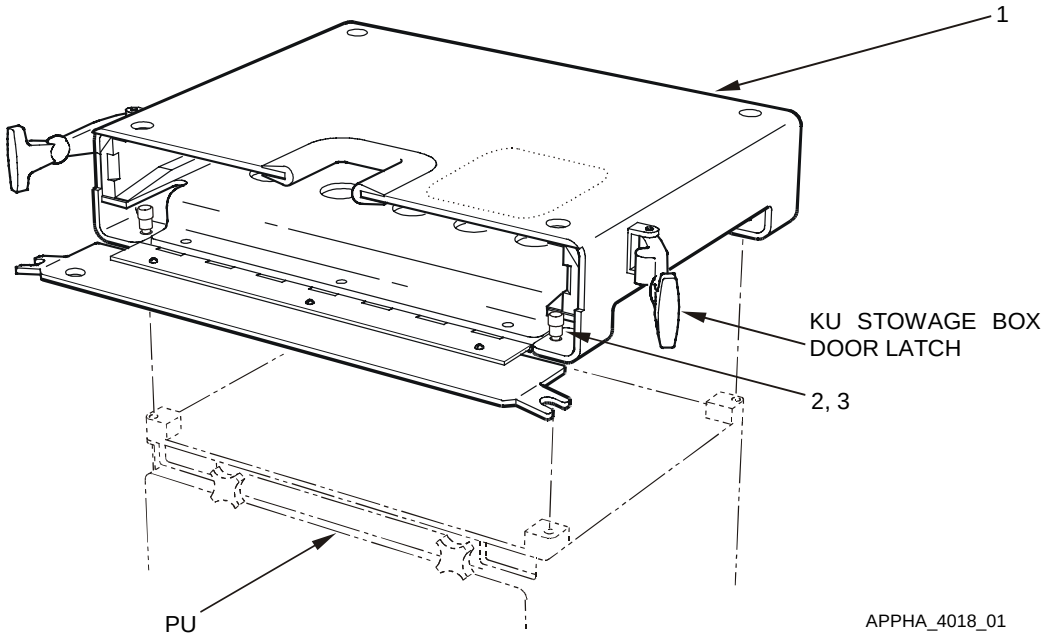

Figure Z-9. Remove and Replace Keyboard Unit (KU) Stowage Box

Key and Parts List for Figure Z-9

ITEM NO.	NOMENCLATURE	CAGE CODE	PART NUMBER	NSN	QTY	SMR
1	Box, KU Stowage	0J198	872845-1	2540-01-481-5744	1	PAODD
2	Screw, Captive Panel	57177	PH207-05SS1032		4	PAOZZ
3	Retainer, Panel Screw	57177	214-03SS10-32		4	PAOZZ
--	Case, Keyboard	0J198	872845-11		1	XBOOO
--	Bottom, Stowage Box	0J198	872845-12		1	XBOOO
--	Side Rail, Keybd Box	0J198	872845-13		1	XBOOO
--	Side Rail, Keybd Box	0J198	872845-14		1	XBOOO
--	Door, Keyboard Box	0J198	872845-15		1	XBOOO
--	Hinge, Keyboard Box	0J198	872845-16		1	XBOOO
--	Strip, Rubber	0J198	872845-17		1	XBOOO
--	Rivet, Solid, Csk	96906	MS20426AD-4-5	5320-00-117-6950	6	PAOZZ
--	Label, Keyboard Box	0J198	881323-1		1	PAOZZ
--	Screw, Pan Head	96906	MS35206-229	5305-00-984-4989	14	PAOZZ
--	Washer, Flat	96906	MS27183-5	5310-00-983-8483	16	PAOZZ
--	Washer, Lock	96906	MS35338-41	5310-00-045-4007	13	PAOZZ
--	Nut, Plain	96906	MS35649-262	5310-00-934-9747	3	PAOZZ
--	Rubber Edge Trim	39428	8507K16	5325-01-435-2840	9	PAOZZ
--	Adhesive	04963	SCOTCH-GRIP RUB	8040-00-664-4318	1	PAOZZ
--	Grip, Handle Assembly	0J198	861867-1		1	XBOOO
--	Grip, Handle	0J198	861869-1		1	XBOZZ
--	Screw, Machine	96906	MS35206-228	5305-00-984-4988	4	PAOZZ
--	Washer, Lock	96906	MS35338-41	5310-00-045-4007	4	PAOZZ
--	Tape, Shielding, Elect	39428	7648A34		1	XBOZZ

Z–6.11 REMOVE/REPLACE KEYBOARD UNIT (KU) STOWAGE BOX DOOR LATCHES

Refer to Figure Z-10.

Z–6.11.1 REMOVE KEYBOARD UNIT (KU) STOWAGE BOX DOOR LATCHES

a. Pull rubber T-handles and unfasten KU stowage box door latches, if necessary.

b. Remove two pan head screws (1), lock washers (2), and flat washers (3) from each KU stowage box door latch (4) using a No. 2 cross-tip screwdriver.

c. Remove KU stowage box door latch (4).

Z–6.11.2 REPLACE KEYBOARD UNIT (KU) STOWAGE BOX DOOR LATCHES

NOTE

The same KU stowage box door latch part is used for each side of the keyboard stowage box. Position bumper on one side of the latch so that it is positioned toward the side of the keyboard stowage box when fastened.

a. Align KU stowage box door latch mounting holes with mounting holes in KU stowage box.

b. Install and tighten two pan head screws (1), lock washers (2), and flat washers (3) for each KU stowage box door latch (4), using a No. 2 cross-tip screwdriver.

c. Pull rubber T-handles and fasten KU stowage box door latches.

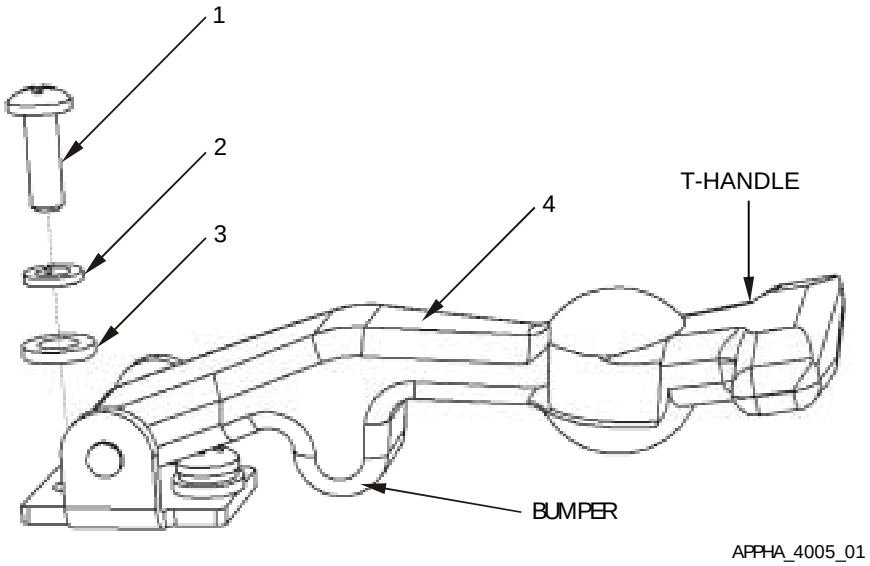

Figure Z-10. Remove and Replace Keyboard Unit (KU) Stowage Box Door Latches

Key and Parts List for Figure Z-10

ITEM NO.	NOMENCLATURE	CAGE CODE	PART NUMBER	NSN	QTY	SMR
1	Screw, Pan Head	96906	MS35206-229	5305-00-984-4989	4	PAOZZ
2	Washer, Lock	96906	MS35338-41	5310-00-045-4007	4	PAOZZ
3	Washer, Flat	96906	MS27183-5	5310-00-983-8483	4	PAOZZ
4	(KU stowage box door latch) Latch, Thumb	94222	37-20-071-20	5340-01-351-3340	2	PAOZZ

APPENDIX AA

SUPPLEMENTARY INFORMATION FOR

M1070 HEAVY EQUIPMENT TRANSPORT (HET)

TABLE OF CONTENTS

		Page
AA–1	GENERAL	AA–3
AA–2	COMPONENT ITEM NUMBERS AND PART NUMBERS	AA–3
AA–3	SYSTEM INTERFACES	AA–3
AA–3.1	MECHANICAL	AA–3
AA–3.2	CABLE INTERFACES	AA–4
AA–4	COMPONENT LOCATION	AA–6
AA–4.1	GENERAL LOCATION	AA–6
AA–4.2	MOUNTING	AA–7
AA–5	PLATFORM-UNIQUE TROUBLESHOOTING	AA–8
AA–6	REMOVAL/REPLACEMENT IN THE PLATFORM	AA–8
AA–6.1	FUNCTIONAL CHECK	AA–8
AA–6.2	REMOVE/REPLACE W1 POWER CABLE	AA–9
AA–6.3	REMOVE/REPLACE W2 DISPLAY CABLE	AA–10
AA–6.4	REMOVE/REPLACE W3 SERIAL INTERFACE ADAPTER DEVICE (SIAD)	AA–11
AA–6.5	REMOVE/REPLACE W3P PLGR CABLE	AA–12
AA–6.6	REMOVE/REPLACE W3N INC CABLE	AA–13
AA–6.7	REMOVE/REPLACE PU ISOLATION ASSEMBLY	AA–15
AA–6.8	REMOVE/REPLACE DU ISOLATION ASSEMBLY	AA–18
AA–6.9	REMOVE/REPLACE KEYBOARD UNIT (KU) STOWAGE BOX	AA–20
AA–6.10	REMOVE/REPLACE KEYBOARD UNIT (KU) STOWAGE BOX DOOR LATCHES	AA–22

LIST OF ILLUSTRATIONS

Page
Figure AA-1. Equipment Interface Block Diagram AA–5
Figure AA-2. Relative Component Locations AA–6
Figure AA-3. DU, PLGR and KU Stowage Box Mounting AA–7
Figure AA-4. Cable Run AA–14
Figure AA-5. Remove and Replace PU Isolation Assembly AA–17
Figure AA-6. Remove and Replace DU Isolation Assembly AA–19
Figure AA-7. Remove and Replace Keyboard Unit (KU) Stowage Box AA–20
Figure AA-8. Remove and Replace Keyboard Unit (KU) Stowage Box Door Latches AA–23

AA–1 GENERAL

This appendix describes the interface between the FBCB2 equipment and the M1070 Heavy Equipment Transport (HET). This appendix also identifies the component parts of the M1070 HET platform installation kit and details the removal and replacement procedures particular to the M1070 HET.

AA–2 COMPONENT ITEM NUMBERS AND PART NUMBERS

Key and Parts List tables contained in the Removal and Replacement section of this Appendix serve a dual purpose. Use the Item Numbers in the Key to identify components and attaching hardware shown in the Figures illustrating the tasks. The nomenclature and part number for the hardware and equipment mounting components of the installation kit also are keyed to the Item Numbers in the tables. Additional parts ordering information, such as Contractor and Government Entity code (CAGE); National Stock Number (NSN); quantity; and Source, Maintenance and Recoverability (SMR) codes, are provided. The Key and Parts List follow the task illustrations.

AA–3 SYSTEM INTERFACES

AA–3.1 MECHANICAL

The mechanical hardware-to-hardware interfaces include:

a. Cables

b. Processor Unit (PU)

c. Display Unit (DU)

d. Keyboard Unit (KU)

AA–3.2 CABLE INTERFACES

Figure AA-1 illustrates a block diagram of the interface between FBCB2 equipment and the M1070 HET (Platform). Figure AA-1 also illustrates the signal and control interfaces along with the terminal connector labels (e.g., P1, P2). The purpose of each cable is listed below:

Cable Name	Purpose
W1–Cable	Supplies vehicle power (28 VDC) to the AN/UYK-128(V) computer and its subassemblies.
W2–Cable	Supplies power and signals to the Display Unit (DU) and Keyboard Unit (KU). Returns Man-Machine Interface (MMI) information from the KU to the Processor Unit (PU).
W3–Cable	The Serial Interface Adapter Device (SIAD) is a conduit assembly that breaks out each of the serial interface ports to a connector.
W3P–Cable	Collects position and time information from the PLGR.
W3N–Cable	Provides duplex communication between the PU, Internet Controller (INC) and radios.
W4–Cable	Audio cable (not used in this platform).
W5–Cable	The Expansion Interface Adapter Device (EIAD) is connected to the Universal Serial Bus (USB) connector only when this vehicle is to be used in a Tactical Operations Center (TOC) setup. When used in this configuration, the EIAD is connected between the PU J5 connector and local router.
Ground Strap	Provides safety ground for the PU.
Ground Strap	Provides safety ground for the DU.

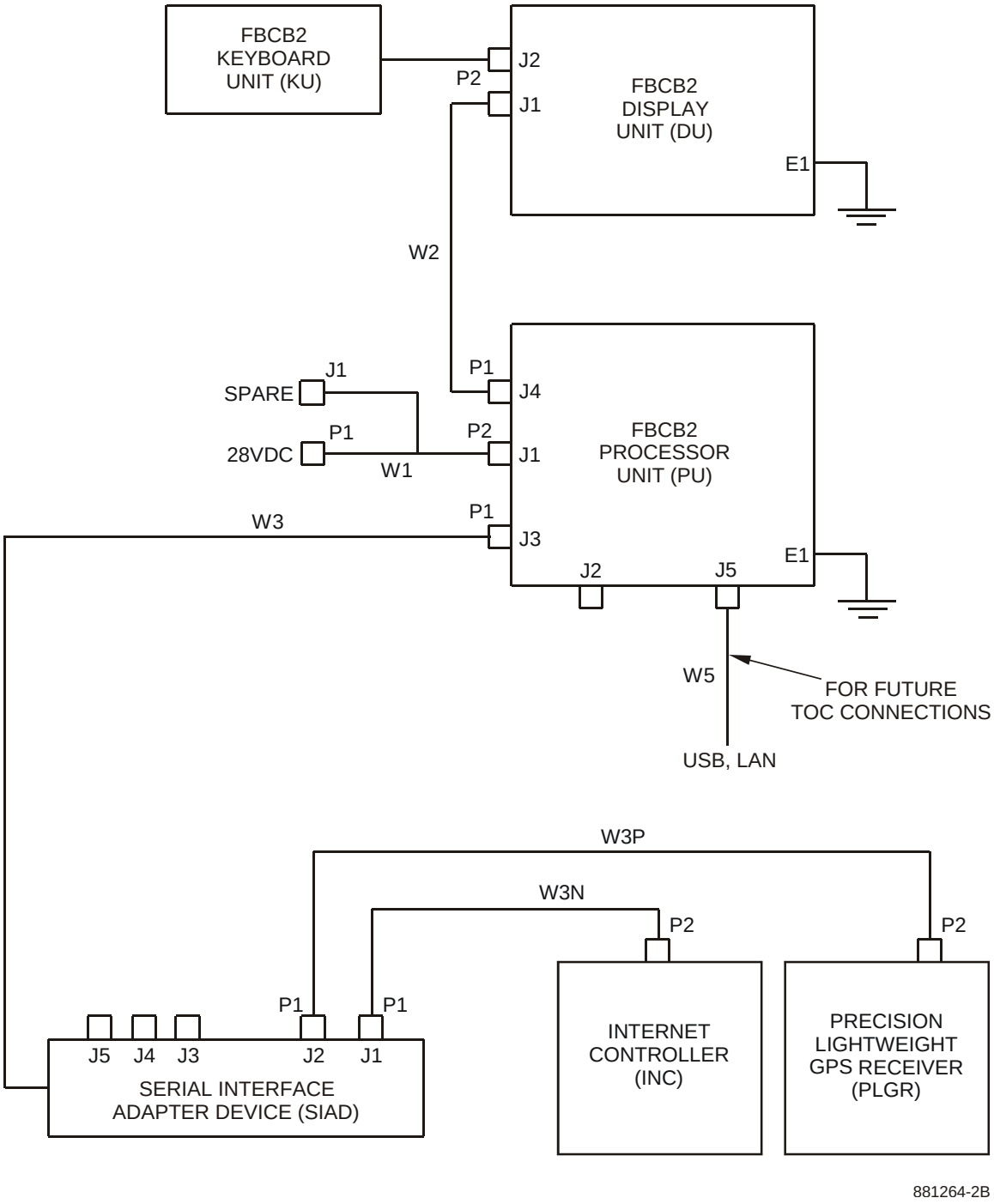

Figure AA-1. Equipment Interface Block Diagram

AA–4 COMPONENT LOCATION

AA–4.1 GENERAL LOCATION

Figure AA-2 shows the relative locations of the FBCB2 computer equipment and mounting components in the cab of the M1070 HET. The PU is mounted roadside beneath the rear passenger seat.

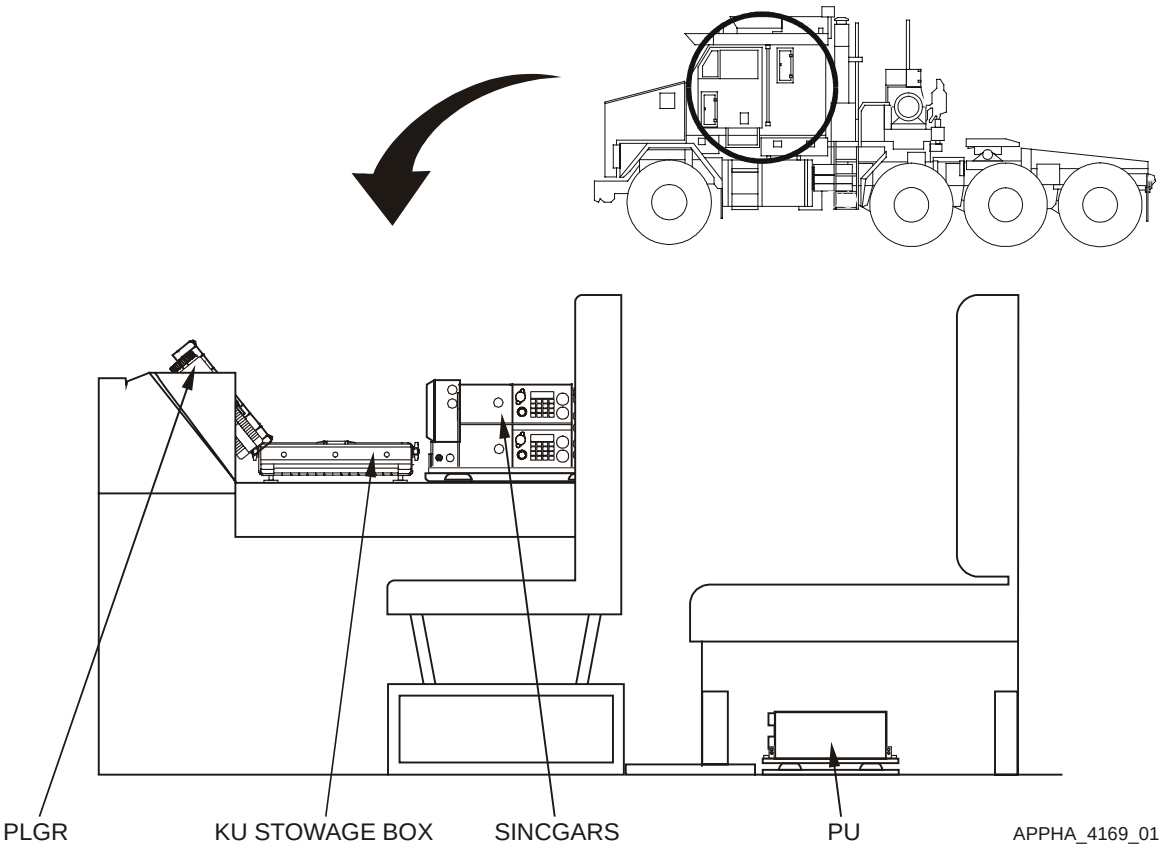

Figure AA-2. Relative Component Locations

AA–4.2 MOUNTING

AA–4.2.1 DU, PLGR AND KU STOWAGE BOX MOUNTING

Figure AA-3 illustrates mounting of the DU and PLGR on the dashboard of the M1070 HET. The KU Stowage Box is mounted flat on a center console in front of the radios.

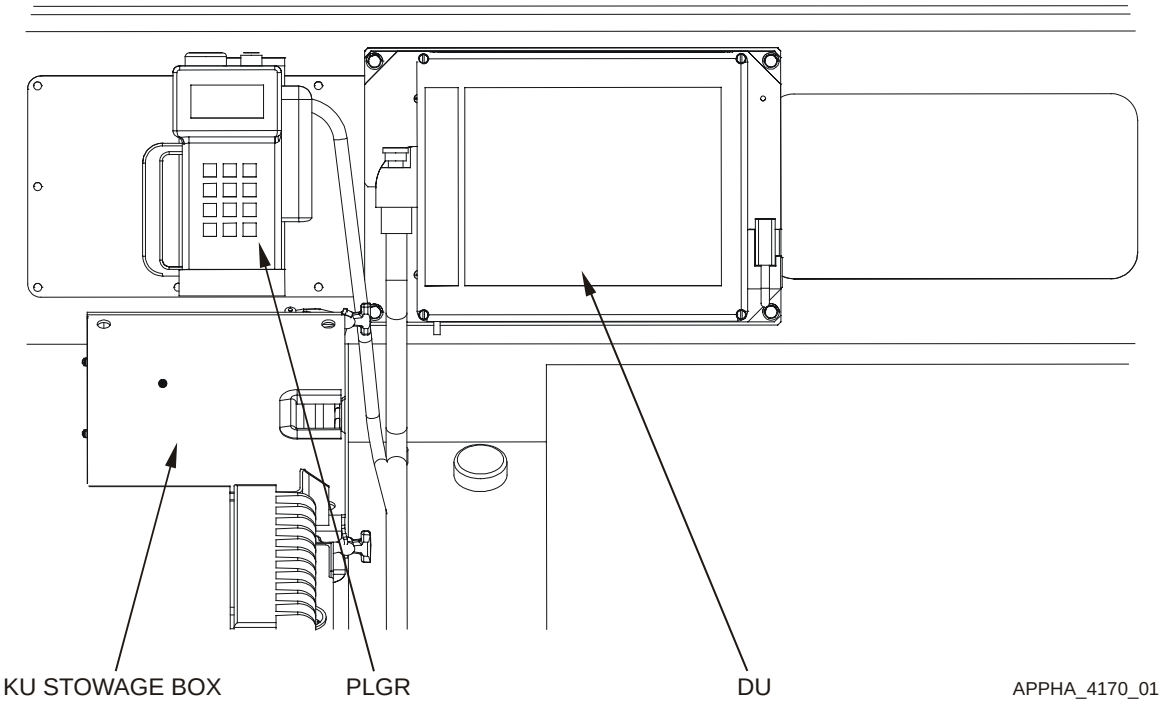

Figure AA-3. DU, PLGR and KU Stowage Box Mounting

AA–5 PLATFORM-UNIQUE TROUBLESHOOTING

No unique troubleshooting procedures are required for this vehicle.

AA–6 REMOVAL/REPLACEMENT IN THE PLATFORM

Most installations must be tailored to the platform. Cables and brackets are unique to the installation. Before a part or assembly is removed from a vehicle, fill out a “Maintenance Request” DA Form 2407. One copy of this completed form must remain with the vehicle and the remaining copies must be kept with the failed component. To prove the operability of the system after an item is replaced, perform the system Functional Check.

AA–6.1 FUNCTIONAL CHECK

AA–6.1.1 POWER UP

Power up and initialize all interface equipment and the AN/UYK-128(V) In Accordance With (IAW) Operator’s Manual TM 11-7010-326-10, or Pocket Guide TB 11-7010-326-10.

AA–6.1.2 VERIFICATION

NOTE

Observe that the Display Unit PWR, DISP and CPU green LED lights are lit.

a. Observe that the PLGR synchronizes with PU, indicated by the PLGR dialog box showing green.

b. Observe that the Router synchronizes with the PU, indicated by the Router dialog box showing green.

c. At the Session Manager screen, select OPS button to display the OPS screen.

d. Verify the GPS status is either green or amber on the Classification/Status Bar.

e. Verify the Communications status is either green or amber on the Classification/Status Bar.

AA–6.1.3 POWER DOWN

Power down all interface equipment and the AN/UYK-128(V) IAW the Operator’s Manual TM 11-7010-326-10, or Pocket Guide TB 11-7010-326-10.

AA–6.2 REMOVE/REPLACE W1 POWER CABLE

Refer to Figure AA-4.

AA–6.2.1 REMOVE W1 POWER CABLE

WARNING

Before conducting maintenance involving the removal and replacement of system components, ensure that all power to the FBCB2 system is off (including power from the vehicle). Failure to comply with warning may result in equipment damage or injury to personnel.

a. Power down AN/UYK-128(V) system IAW Operator's Manual TM 11-7010-326-10, or Pocket Guide TB 11-7010-326-10.

b. Power down SINCGARS IAW TM 11-5820-890-10-8.

c. Disconnect W1-P1 cable connector from SINCGARS Mounting Base (MB) (MT-6352/VRC) A4-J2 connector.

d. Disconnect W1-P2 cable connector from PU J1 connector.

e. Install protective cap on PU J1 connector.

NOTE

Note cable routing and tie-wrap locations before removing cable or tie-wraps.

f. Remove tie-wraps securing W1 cable using diagonal wire cutters.

g. Remove W1 power cable (3).

AA–6.2.2 REPLACE W1 POWER CABLE

a. Route W1 power cable (3).

b. Remove protective cap from PU J1 connector.

c. Connect W1-P2 cable connector to PU J1 connector.

d. Connect W1-P1 cable connector to SINCGARS Mounting Base (MB) (MT-6352/VRC) A4-J2 connector.

e. Secure W1 cable using tie-wraps.

f. Dress tie-wraps using diagonal wire cutters.

g. Perform Functional Check IAW paragraph AA–6.1.

AA–6.3 REMOVE/REPLACE W2 DISPLAY CABLE

Refer to Figure AA-4.

AA–6.3.1 REMOVE W2 DISPLAY CABLE

WARNING

Before conducting maintenance involving the removal and replacement of system components, ensure that all power to the FBCB2 system is off (including power from the vehicle). Failure to comply with warning may result in equipment damage or injury to personnel.

a. Power down AN/UYK-128(V) system IAW Operator's Manual TM 11-7010-326-10, or Pocket Guide TB 11-7010-326-10.

b. Disconnect W2-P1 cable connector from PU J4 connector.

c. Install protective cap on PU J4 connector.

d. Disconnect W2-P2 cable connector from display J1 connector.

e. Install protective cap on display J1 connector.

NOTE

Note cable routing, cable clamps and tie-wrap locations before removing cable or tie-wraps.

f. Remove three cable clamps using 7/16" open-end wrench and four cable clamps using No. 2 cross-tip screwdriver.

g. Remove tie-wraps securing W2 cable using diagonal wire cutters.

h. Remove W2 display cable (2).

AA–6.3.2 REPLACE W2 DISPLAY CABLE

a. Route W2 display cable (2).

b. Remove protective cap from display J1 connector.

c. Connect W2-P2 cable connector to display J1 connector.

d. Remove protective cap from PU J4 connector.

e. Connect W2-P1 cable connector to PU J4 connector.

f. Install three cable clamps using 7/16" open-end wrench.

g. Install four cable clamps using No. 2 cross-tip screwdriver.

h. Secure W2 cable using tie-wraps.

i. Dress tie-wraps using diagonal wire cutters.

j. Perform Functional Check IAW paragraph AA–6.1.

AA–6.4 REMOVE/REPLACE W3 SERIAL INTERFACE ADAPTER DEVICE (SIAD)

Refer to Figure AA-4.

AA–6.4.1 REMOVE W3 SERIAL INTERFACE ADAPTER DEVICE (SIAD)

WARNING

Before conducting maintenance involving the removal and replacement of system components, ensure that all power to the FBCB2 system is off (including power from the vehicle). Failure to comply with warning may result in equipment damage or injury to personnel.

a. Power down AN/UYK-128(V) system IAW Operator's Manual TM 11-7010-326-10, or Pocket Guide TB 11-7010-326-10.

b. Disconnect W3N-P1 INC cable connector from W3 SIAD J1 connector.

c. Disconnect W3P-P1 PLGR cable connector from W3 SIAD J2 connector.

d. Disconnect W3 SIAD-P1 cable connector from PU J3 connector.

e. Install protective cap on PU J3 connector.

NOTE

Note cable routing and tie-wrap locations before removing cable or tie-wraps.

f. Remove tie-wraps securing W3 SIAD using diagonal wire cutters.

g. Remove W3 SIAD (5).

AA–6.4.2 REPLACE W3 SERIAL INTERFACE ADAPTER DEVICE (SIAD)

a. Route W3 SIAD (5) into original position.

b. Remove protective cap from PU J3 connector.

c. Connect W3 SIAD-P1 cable connector to PU J3 connector.

d. Connect W3P-P1 PLGR cable connector to W3 SIAD J2 connector.

e. Connect W3N-P1 INC cable connector to W3 SIAD J1 connector.

f. Secure W3 SIAD using tie-wraps.

g. Dress tie-wraps using diagonal wire cutters.

h. Perform Functional Check IAW paragraph AA–6.1.

AA–6.5 REMOVE/REPLACE W3P PLGR CABLE

Refer to Figure AA-4.

AA–6.5.1 REMOVE W3P PLGR CABLE

WARNING

Before conducting maintenance involving the removal and replacement of system components, ensure that all power to the FBCB2 system is off (including power from the vehicle). Failure to comply with warning may result in equipment damage or injury to personnel.

a. Power down AN/UYK-128(V) system IAW Operator's Manual TM 11-7010-326-10, or Pocket Guide TB 11-7010-326-10.

b. Disconnect W3P-P1 cable connector from W3 SIAD J2 connector.

c. Unfasten over-center latch and remove PLGR from mounting rack.

d. Disconnect W3P-P2 cable connector from PLGR J2 connector using an offset flat-tip screwdriver.

NOTE

Note cable routing and tie-wrap locations before removing cable or tie-wraps.

e. Remove tie-wraps securing W3P cable using diagonal wire cutters.

f. Remove W3P cable (1).

AA–6.5.2 REPLACE W3P PLGR CABLE

a. Route W3P cable (1).

b. Connect W3P-P2 cable connector to PLGR J2 connector using an offset flat-tip screwdriver.

c. Install PLGR in mounting rack and fasten over-center latch.

d. Connect W3P-P1 cable connector to W3 SIAD J2 connector.

e. Secure W3P cable using tie-wraps.

f. Dress tie-wraps using diagonal wire cutters.

g. Perform Functional Check IAW paragraph AA–6.1.

AA–6.6 REMOVE/REPLACE W3N INC CABLE

Refer to Figure AA-4.

AA–6.6.1 REMOVE W3N INC CABLE

WARNING

Before conducting maintenance involving the removal and replacement of system components, ensure that all power to the FBCB2 system is off (including power from the vehicle). Failure to comply with warning may result in equipment damage or injury to personnel.

a. Power down AN/UYK-128(V) system IAW Operator's Manual TM 11-7010-326-10, or Pocket Guide TB 11-7010-326-10.

b. Power down SINCGARS IAW TM 11-5820-890-10-8.

c. Disconnect W3N-P1 cable connector from W3 SIAD J1 connector.

d. Disconnect W3N-P2 cable connector from SINCGARS INC A2-J6 connector.

NOTE

Note cable routing and tie-wrap locations before removing cable or tie-wraps.

e. Remove tie-wraps securing W3N cable using diagonal cutters.

f. Remove W3N cable (4).

AA–6.6.2 REPLACE W3N INC CABLE

a. Route W3N cable (4).

b. Connect W3N-P2 cable connector to SINCGARS INC A2-J6 connector.

c. Connect W3N-P1 cable connector to W3 SIAD J1 connector.

d. Secure W3N cable using tie-wraps.

e. Dress tie-wraps using diagonal wire cutters.

f. Perform Functional Check IAW paragraph AA–6.1.

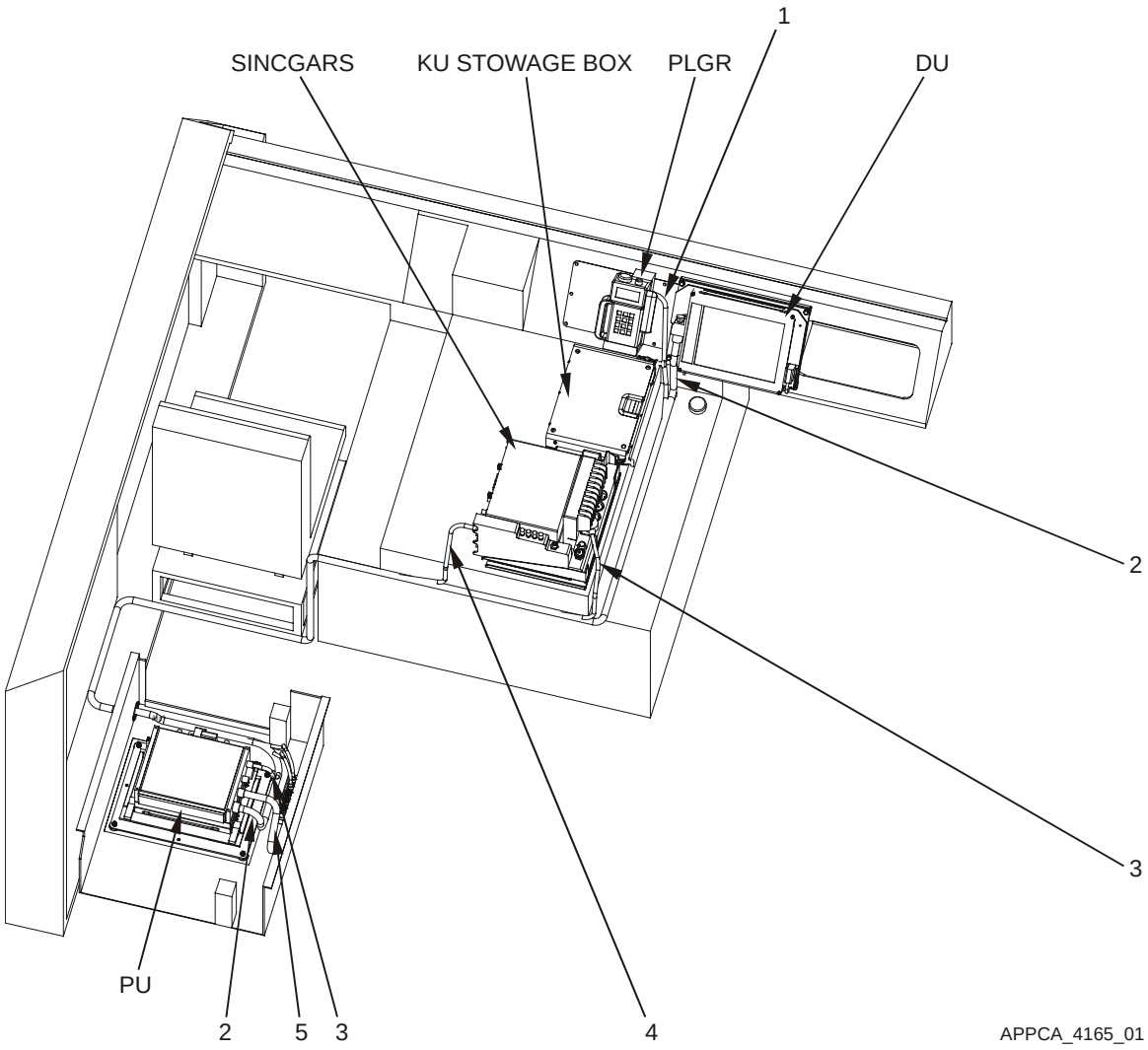

Figure AA-4. Cable Run

Key and Parts List for Figure AA-4

ITEM NO.	NOMENCLATURE	CAGE CODE	PART NUMBER	NSN	QTY	SMR
1	Cable Assembly W3P	0J198	881335-3	5995-01-478-4898	1	PAODD
2	Cable Assembly W2	0J198	881327-4	5995-01-478-4880	1	PAODD
3	Cable Assembly W1	0J198	861880-8	5995-01-478-5012	1	PAODD
4	Cable Assembly W3N	0J198	881336-3	5995-01-478-5080	1	PAODD
5	Adapter Assy, SIAD W3	0J198	881331-1	4920-01-478-3722	1	PAODD
--	Strap, Tie Down, Elect	39428	7130K31		A/R	PAOZZ
--	Holder, Cable, Tie 2w	39428	7566K27		A/R	PAOZZ

AA–6.7 REMOVE/REPLACE PU ISOLATION ASSEMBLY

Refer to Figure AA-5.

NOTE

Ground straps are attached to components at one end (PU and DU) and a frame ground at the other end. Regardless of where the ground strap terminates, it is usually a burnished (void of paint) area. If the ground strap is removed from a burnished area, make sure to return it to the same burnished area. Where applicable, always connect the ground strap first when assembling, and disconnect the ground strap last when disassembling.

AA–6.7.1 REMOVE PU ISOLATION ASSEMBLY

WARNING

Before conducting maintenance involving the removal and replacement of system components, ensure that all power to the FBCB2 system is off (including power from the vehicle). Failure to comply with warning may result in equipment damage or injury to personnel.

a. Power down AN/UYK-128(V) system IAW Operator's Manual TM 11-7010-326-10, or Pocket Guide TB 11-7010-326-10.

NOTE

Do not remove the Removable Hard Disk Drive Cartridge (RHDDC) or locking bracket from PU.

b. Remove PU IAW Unit Maintenance Manual TM 11-7010-326-20&P, Chapter 2.

c. Remove one hex nut (2), lock washer (3), flat washer (4) and ground strap from PU isolation assembly (1) bottom plate using a 7/16" open-end wrench and a 7/16" socket with ratchet.

d. Remove remaining three hex nuts (2), lock washers (3) and flat washers (4) from PU isolation assembly (1) bottom plate using a 7/16" open-end wrench and a 7/16" socket with ratchet.

e. Remove PU isolation assembly (1) from PU mounting studs.

AA–6.7.2 REPLACE PU ISOLATION ASSEMBLY

a. Align four PU isolation assembly bottom plate holes with PU mounting studs.

NOTE

To ensure positive ground, PU ground strap must make direct contact with bare metal. Ensure PU ground strap is installed in its original location at the PU isolation assembly bottom plate mounting hole. Install the isolation assembly, ground strap, flat washer and lock washer on the mounting stud before installing and tightening hex nut.

b. Install ground strap, flat washer (4), lock washer (3) and hex nut (2) on PU isolation assembly (1) bottom plate using a 7/16” open-end wrench and a 7/16” socket with ratchet.

c. Install remaining three flat washers (4), lock washers (3) and hex nuts (2) on PU isolation assembly bottom plate using a 7/16” open-end wrench and a 7/16” socket with ratchet.

d. Install PU IAW Unit Maintenance Manual TM 11-7010-326-20&P, Chapter 2.

e. Perform Functional Check IAW paragraph AA–6.1.

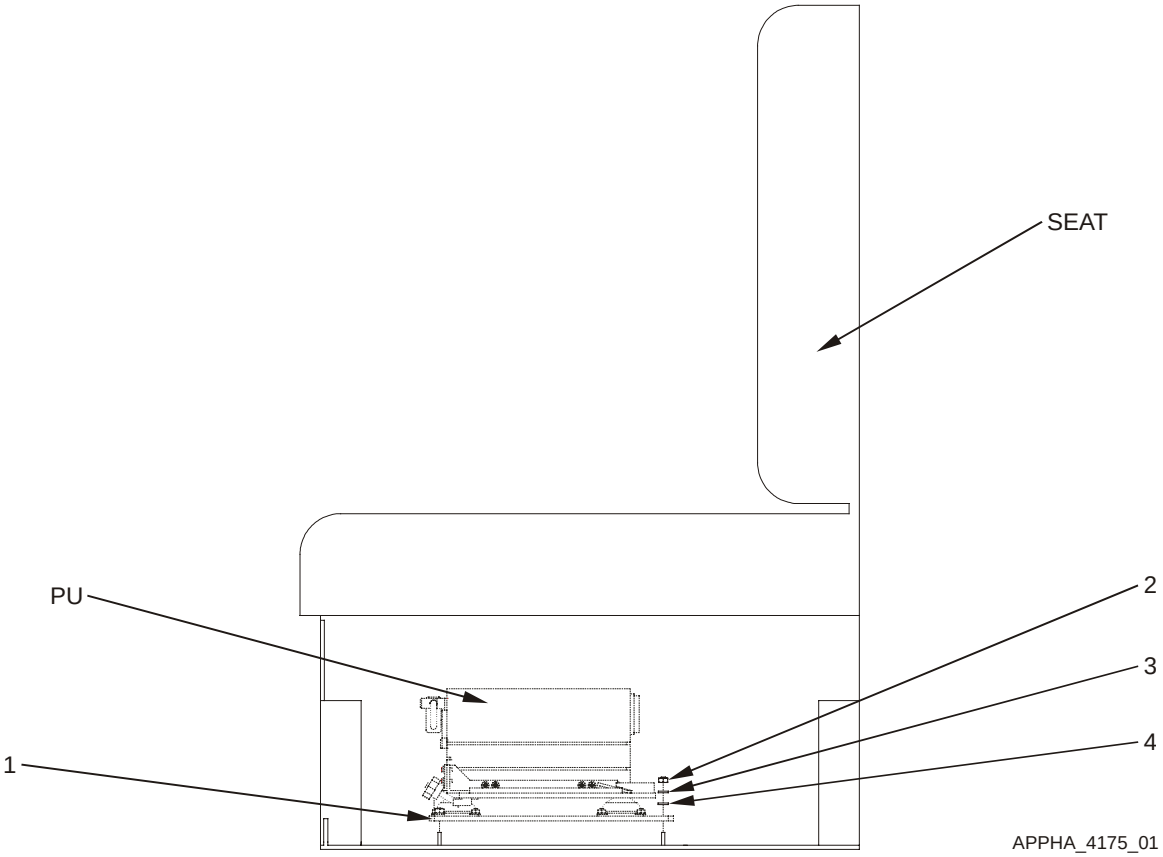

Figure AA-5. Remove and Replace PU Isolation Assembly

Key and Parts List for Figure AA-5

ITEM NO.	NOMENCLATURE	CAGE CODE	PART NUMBER	NSN	QTY	SMR
1	(PU Isolation Assembly) Plate, Resilient Mount PU	0J198	872826-1	5340-01-481-5742	1	PAODD
2	Nut, Plain, Hexagon	96906	MS35650-3252	5310-00-043-0520	4	PAOZZ
3	Washer, Lock	96906	MS35338-44	5310-00-582-5965	4	PAOZZ
4	Washer, Flat	96906	MS27183-10	5310-00-809-4058	4	PAOZZ
--	Assembly, PU Lock	0J198	861865-1		1	XBOOO
--	Bracket, Locking	0J198	861871-1		1	XBOZZ
--	Screw	80205	MS35190-253	5305-00-059-4568	2	PAOZZ

AA–6.8 REMOVE/REPLACE DU ISOLATION ASSEMBLY

Refer to Figure AA-6.

NOTE

Ground straps are attached to components at one end (PU and DU) and a frame ground at the other end. Regardless of where the ground strap terminates, it is usually a burnished (void of paint) area. If the ground strap is removed from a burnished area, make sure to return it to the same burnished area. Where applicable, always connect the ground strap first when assembling, and disconnect the ground strap last when disassembling.

AA–6.8.1 REMOVE DU ISOLATION ASSEMBLY

WARNING

Before conducting maintenance involving the removal and replacement of system components, ensure that all power to the FBCB2 system is off (including power from the vehicle). Failure to comply with warning may result in equipment damage or injury to personnel.

a. Power down AN/UYK-128(V) system IAW Operator's Manual TM 11-7010-326-10, or Pocket Guide TB 11-7010-326-10.

b. Remove DU IAW Unit Maintenance Manual TM 11-7010-326-20&P, Chapter 2.

NOTE

Note cable routing and tie-wrap locations before removing cable or tie-wraps.

c. Remove tie-wraps securing W2 cable and ground strap to DU isolation assembly using diagonal wire cutters.

d. Remove four hex head screws (1), lock washers (2) and flat washers (3) from DU isolation assembly (5) bottom plate and DU mounting plates (4) using a 7/16" socket with ratchet.

e. Remove DU isolation assembly (5) from DU mounting plates (4).

AA–6.8.2 REPLACE DU ISOLATION ASSEMBLY

a. Align four DU isolation assembly (5) bottom plate holes with holes in DU mounting plates (4).

b. Install four hex head screws (1), lock washers (2) and flat washers (3) on DU isolation assembly (5) bottom plate and DU mounting plates (4) using a 7/16" socket with ratchet.

c. Secure W2 display cable and ground strap to DU isolation assembly (5) bottom plate using tie-wraps.

d. Dress tie-wraps using diagonal wire cutters.

e. Install DU IAW Unit Maintenance Manual TM 11-7010-326-20&P, Chapter 2.

f. Perform Functional Check IAW paragraph AA–6.1.

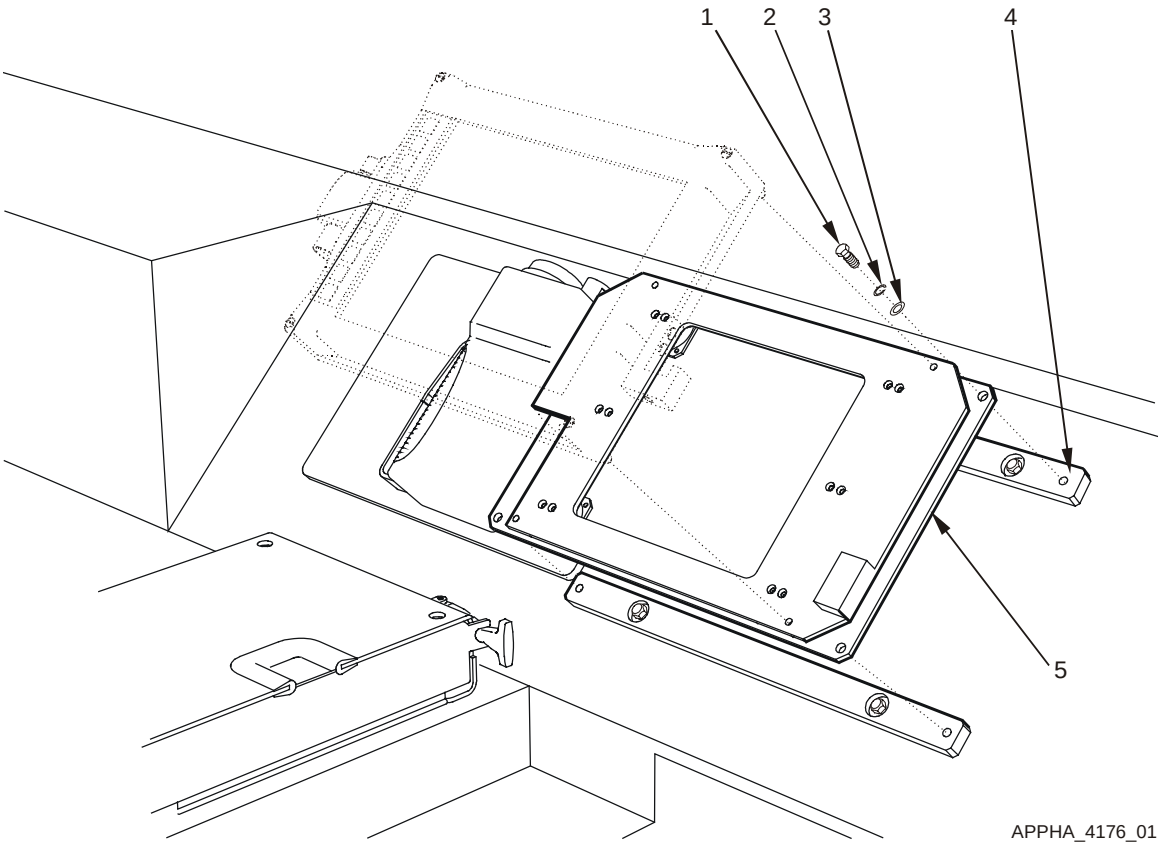

Figure AA-6. Remove and Replace DU Isolation Assembly

Key and Parts List for Figure AA-6

ITEM NO.	NOMENCLATURE	CAGE CODE	PART NUMBER	NSN	QTY	SMR
1	Screw, Cap, Hexagon	80204	B1821AH025C075N	5305-01-389-8000	8	PAOZZ
2	Washer, Lock	96906	MS35338-44	5310-00-582-5965	8	PAOZZ
3	Washer, Flat	96906	MS27183-10	5310-00-809-4058	8	PAOZZ
4	Plate, Mounting DU	0J198	881286-1		2	XBOOO
5	(DU isolation assembly) Plate, Resilient Mount DU	0J198	872871-1	5340-01-481-5743	1	PAODD
--	Assembly, DU Lock	0J198	872843-1		1	XBOOO
--	Bracket, Locking	0J198	861871-3		1	XBOZZ
--	Screw	80205	MS35190-253	5305-00-059-4568	2	PAOZZ
--	Washer, Lock	96906	MS35338-42	5310-00-045-3299	2	PAOZZ

AA–6.9 REMOVE/REPLACE KEYBOARD UNIT (KU) STOWAGE BOX

Refer to Figure AA-7.

AA–6.9.1 REMOVE KEYBOARD UNIT (KU) STOWAGE BOX

a. Remove keyboard from stowage box, if stowed.

b. Loosen four KU stowage box captive screws (2) until captive screws move freely using a No. 2 cross-tip screwdriver.

c. Remove KU stowage box (1).

AA–6.9.2 REPLACE KEYBOARD UNIT (KU) STOWAGE BOX

a. Align four KU stowage box captive screws (2) with installation holes.

b. Tighten four captive screws (2) using a No. 2 cross-tip screwdriver.

c. Stow keyboard, if necessary.

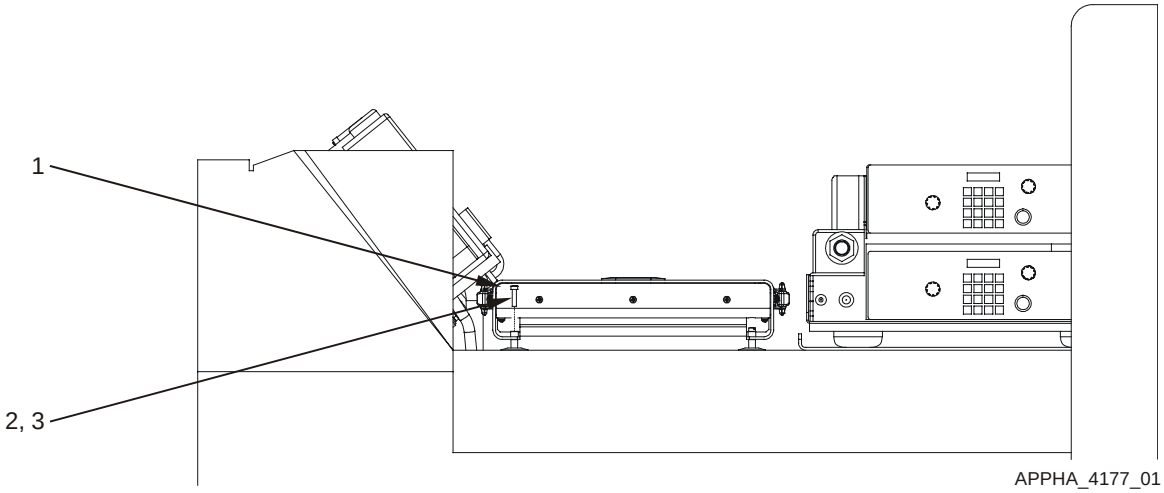

Figure AA-7. Remove and Replace Keyboard Unit (KU) Stowage Box

Key and Parts List for Figure AA-7

ITEM NO.	NOMENCLATURE	CAGE CODE	PART NUMBER	NSN	QTY	SMR
1	Box, KU Stowage	0J198	872845-1	2540-01-481-5744	1	PAODD
2	Screw, Captive Panel	57177	PH207-05SS1032		4	PAOZZ
3	Retainer, Panel Screw	57177	214-03SS10-32		4	PAOZZ
--	Case, Keyboard	0J198	872845-11		1	XBOOO
--	Bottom, Stowage Box	0J198	872845-12		1	XBOOO
--	Side Rail, Keybrd Box	0J198	872845-13		1	XBOOO
--	Side Rail, Keybrd Box	0J198	872845-14		1	XBOOO
--	Door, Keyboard Box	0J198	872845-15		1	XBOOO
--	Hinge, Keyboard Box	0J198	872845-16		1	XBOOO
--	Strip, Rubber	0J198	872845-17		1	XBOOO
--	Rivet, Solid, Csk	96906	MS20426AD-4-5	5320-00-117-6950	6	PAOZZ
--	Label, Keyboard Box	0J198	881323-1		1	PAOZZ
--	Screw, Pan Head	96906	MS35206-229	5305-00-984-4989	14	PAOZZ
--	Washer, Flat	96906	MS27183-5	5310-00-983-8483	16	PAOZZ
--	Washer, Lock	96906	MS35338-41	5310-00-045-4007	13	PAOZZ
--	Nut, Plain	96906	MS35649-262	5310-00-934-9747	3	PAOZZ
--	Latch, Thumb	94222	37-20-071-20	5340-01-351-3340	2	PAOZZ
--	Rubber Edge Trim	39428	8507K16	5325-01-435-2840	9	PAOZZ
--	Adhesive	04963	SCOTCH-GRIP RUB	8040-00-664-4318	1	PAOZZ
--	Grip, Handle Assembly	0J198	861867-1		1	XBOOO
--	Grip, Handle	0J198	861869-1		1	XBOZZ
--	Screw, Machine	96906	MS35206-228	5305-00-984-4988	4	PAOZZ
--	Washer, Lock	96906	MS35338-41	5310-00-045-4007	4	PAOZZ
--	Tape, Shielding, Elect	39428	7648A34		1	XBOZZ

AA–6.10 REMOVE/REPLACE KEYBOARD UNIT (KU) STOWAGE BOX DOOR LATCHES

Refer to Figure AA-8.

AA–6.10.1 REMOVE KEYBOARD UNIT (KU) STOWAGE BOX DOOR LATCHES

a. Remove KU stowage box IAW paragraph AA–6.9.1 above.

b. Pull rubber T-handles and unfasten KU stowage box door latches, if necessary.

c. Remove two pan head screws (1), lock washers (2) and flat washers (3) from each KU stowage box door latch (4) using a No. 2 cross-tip screwdriver.

d. Remove KU stowage box door latch (4).

AA–6.10.2 REPLACE KEYBOARD UNIT (KU) STOWAGE BOX DOOR LATCHES

NOTE

The same KU stowage box door latch part is used for each side of the keyboard stowage box. Position the bumper on one side of the latch so that it is toward the side of the keyboard stowage box when fastened.

a. Align KU stowage box door latch mounting holes with mounting holes in KU stowage box.

b. Install and tighten two pan head screws (1), lock washers (2) and flat washers (3) for each KU stowage box door latch (4), using a No. 2 cross-tip screwdriver.

c. Pull rubber T-handles and fasten KU stowage box door latches.

d. Replace KU stowage box IAW paragraph AA–6.9.2 above.

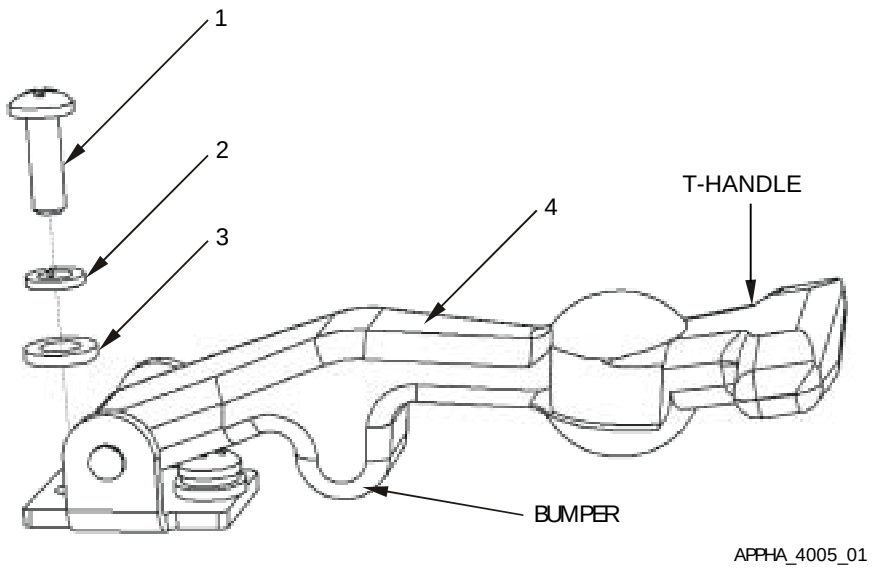

Figure AA-8. Remove and Replace Keyboard Unit (KU) Stowage Box Door Latches

Key and Parts List for Figure AA-8

ITEM NO.	NOMENCLATURE	CAGE CODE	PART NUMBER	NSN	QTY	SMR
1	Screw, Pan Head	96906	MS35206-229	5305-00-984-4989	4	PAOZZ
2	Washer, Lock	96906	MS35338-41	5310-00-045-4007	4	PAOZZ
3	Washer, Flat	96906	MS27183-5	5310-00-983-8483	4	PAOZZ
4	(KU stowage box door latch) Latch, Thumb	94222	37-20-071-20	5340-01-351-3340	2	PAOZZ

This page intentionally left blank.

APPENDIX AB

SUPPLEMENTARY INFORMATION FOR

STANDARDIZED INTEGRATED COMMAND POST SHELTER (SICPS) TENT

TABLE OF CONTENTS

Page
AB–1 GENERAL AB–3
AB–2 COMPONENT ITEM NUMBERS AND PART NUMBERS AB–3
AB–3 SYSTEM INTERFACES AB–3
AB–3.1 MECHANICAL AB–3
AB–3.2 CABLE INTERFACES AB–4
AB–4 COMPONENT LOCATION AB–6
AB–4.1 GENERAL LOCATION AB–6
AB–4.2 MOUNTING AB–7
AB–5 PLATFORM-UNIQUE TROUBLESHOOTING AB–12
AB–5.1 SICPS TENT SYSTEM SAFETY SUMMARY AB–12
AB–6 REMOVAL/REPLACEMENT IN THE PLATFORM AB–15
AB–6.1 FUNCTIONAL CHECK AB–15
AB–6.2 REMOVE/REPLACE POWER CABLES AB–16
AB–6.3 INSPECT W1A POWER CABLE AB–16
AB–6.4 INSPECT W1B POWER CABLE AB–17
AB–6.5 INSPECT W1C POWER CABLE AB–17
AB–6.6 REMOVE/REPLACE W1D PU POWER CABLE AB–18
AB–6.7 REMOVE/REPLACE W1E PLGR POWER CABLE AB–20
AB–6.8 REMOVE/REPLACE W2 DISPLAY CABLE AB–24
AB–6.9 REMOVE/REPLACE W3 SERIAL INTERFACE ADAPTER DEVICE (SIAD) AB–25
AB–6.10 INSPECT W5 EIAD AB–26
AB–6.11 REMOVE/REPLACE W3N INC SERIAL CABLE AB–28
AB–6.12 REMOVE/REPLACE W3P PLGR SERIAL CABLE AB–29
AB–6.13 REMOVE/REPLACE W6 KEYBOARD BULKHEAD CABLE AB–30
AB–6.14 REMOVE/REPLACE EXTERNAL POWER MODULE (EPM) AB–33
AB–6.15 REMOVE/REPLACE DISPLAY TOP PLATE AB–37

TABLE OF CONTENTS (CONTINUED)

Page
AB–6.16 REMOVE/REPLACE RAM-BALL ASSEMBLY AB–39
AB–6.17 REMOVE/REPLACE KEYBOARD UNIT (KU) AB–41
AB–6.18 REMOVE/REPLACE GFE PLGR BRACKET AB–44

LIST OF ILLUSTRATIONS

Figure AB-1. SICPS TENT Equipment Interface Block Diagram AB–5
Figure AB-2. SICPS TENT Transit Case and Component Location AB–6
Figure AB-3. SICPS TENT Seat/Lid Assembly AB–7
Figure AB-4. Top View SICPS TENT System Components in Base AB–8
Figure AB-5. Left Side View SICPS TENT Equipment Rack AB–10
Figure AB-6. W3 SIAD Mounts on Top of W5 EIAD AB–27
Figure AB-7. SICPS TENT Cables General Layout AB–31
Figure AB-8. Remove and Replace External Power Module AB–36
Figure AB-9. Remove and Replace Display Top Plate and RAM-Ball Assembly..... AB–38
Figure AB-10. Remove and Replace Keyboard Unit AB–43
Figure AB-11. Remove and Replace GFE PLGR Bracket AB–45

AB–1 GENERAL

This appendix describes the interfaces between the FBCB2 equipment and the Standardized Integrated Command Post Shelter (SICPS) TENT portable platform. It also identifies the component parts of the SICPS TENT unit installation kit and details the removal and replacement procedures particular to the SICPS TENT.

AB–2 COMPONENT ITEM NUMBERS AND PART NUMBERS

Key and Parts List tables contained in the Removal and Replacement section of this Appendix serve a dual purpose. Use the Item Numbers in the Key to identify components and attaching hardware shown in the Figures illustrating the tasks. The nomenclature and part number for the hardware and equipment mounting components of the installation kit also are keyed to the Item Numbers in the tables. Additional parts ordering information, such as Contractor and Government Entity code (CAGE); National Stock Number (NSN); quantity; and Source, Maintenance, and Recoverability (SMR) codes, are provided. The Key and Parts List follow the task illustrations.

AB–3 SYSTEM INTERFACES

AB–3.1 MECHANICAL

The mechanical hardware-to-hardware interfaces include:

a. Cables

b. Processor Unit (PU)

c. Display Unit (DU)

d. Keyboard Unit (KU)

AB–3.2 CABLE INTERFACES

Figure AB-1 illustrates a block diagram of the interface between the FBCB2 equipment and the SICPS TENT (platform). Figure AB-1 also shows most of the internal and external signal and control interfaces. The purpose of each cable is listed below. Those cables marked "Direct support item" are maintained by direct support personnel, but are included here to provide information that is as complete as possible.

Cable Name	Purpose
W1A–Cable	Supplies 28 VDC power from an external source or vehicle to the SICPS TENT External Power Module (EPM), or power supply. (Direct support item)
W1B–Cable	Supplies 120 VAC power from a facility or AC generator through the Ground Fault Circuit Interrupter (GFCI). (Direct support item)
W1C–Cable	Supplies 120 VAC power from the GFCI to the EPM. (Direct support item)
W1D–Cable	Supplies 28 VDC power (converted from 120 VAC by EPM) to the AN/UYK-128(V) computer and its subassemblies.
W1E–Cable	Supplies 28 VDC power (converted from 120 VAC by EPM) to the PLGR. This cable contains an in-line 2 amp, 250 V fuse in a plastic cartridge to protect against overload.
W2–Cable	Supplies power and signals to the Display Unit (DU) and Keyboard Unit (KU). Returns Man Machine Interface (MMI) information from the KU to the Processor Unit (PU).
W3–Cable	The Serial Interface Adapter Device (SIAD) is a conduit assembly that breaks out each of the serial interface ports to a connector.
W3P–Cable	Collects position and time information from the PLGR.
W3N–Cable	Provides duplex communication between the PU, Internet Controller (INC) and radios.
W4–Cable	Not used in this configuration.
W5–Cable	The Expansion Interface Adapter Device (EIAD) is connected to the Universal Serial Bus (USB) connector only when this platform is used in a Tactical Operations Center (TOC) setup. When used in this configuration, the EIAD is connected between the PU J5 connector and local router.
W6–Cable	Connects the display to the bulkhead connector on the electrical equipment rack. The keyboard input cable is connected to the other side of the bulkhead connector.
Ground Strap	Provides safety ground for the PU.
Ground Strap	Provides safety ground for the DU.
Ground Strap	Provides safety ground for the EPM.

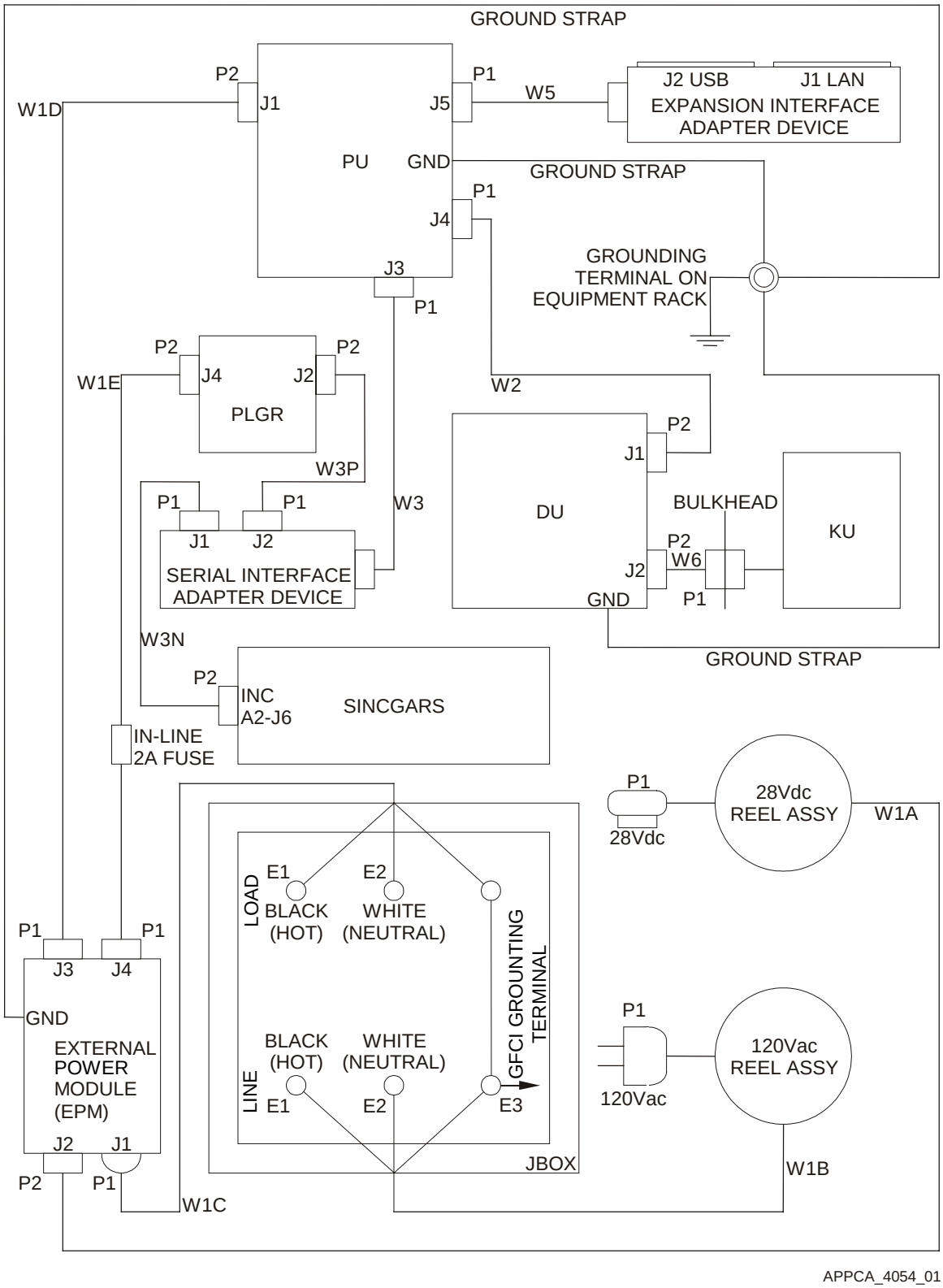

Figure AB-1. SICPS TENT Equipment Interface Block Diagram

AB–4 COMPONENT LOCATION

AB–4.1 GENERAL LOCATION

Figure AB-2 illustrates the portable configuration that comprises the SICPS TENT. The cover of the ruggedized composite case is removed and used as a seat. Aluminum legs are stored in the cover and may be attached to the bottom of the case, or the unit may be set up on a table or bench. The base contains a drain plug for eliminating water or condensation.

The keyboard drawer slides out and provides an optional work surface for the keyboard. The display unit is attached with an adjustable RAM-Ball Assembly. The unit is complete with a GFE PLGR and all necessary cables, which are stored in the base below the SICPS TENT equipment rack.

The design allows the entire AN/UYK-128(V) system to be conveniently stored and transported. The SICPS TENT system in its transit case weighs 152 pounds. The unit is equipped with six (6) lifting handles and requires four persons to move it safely.

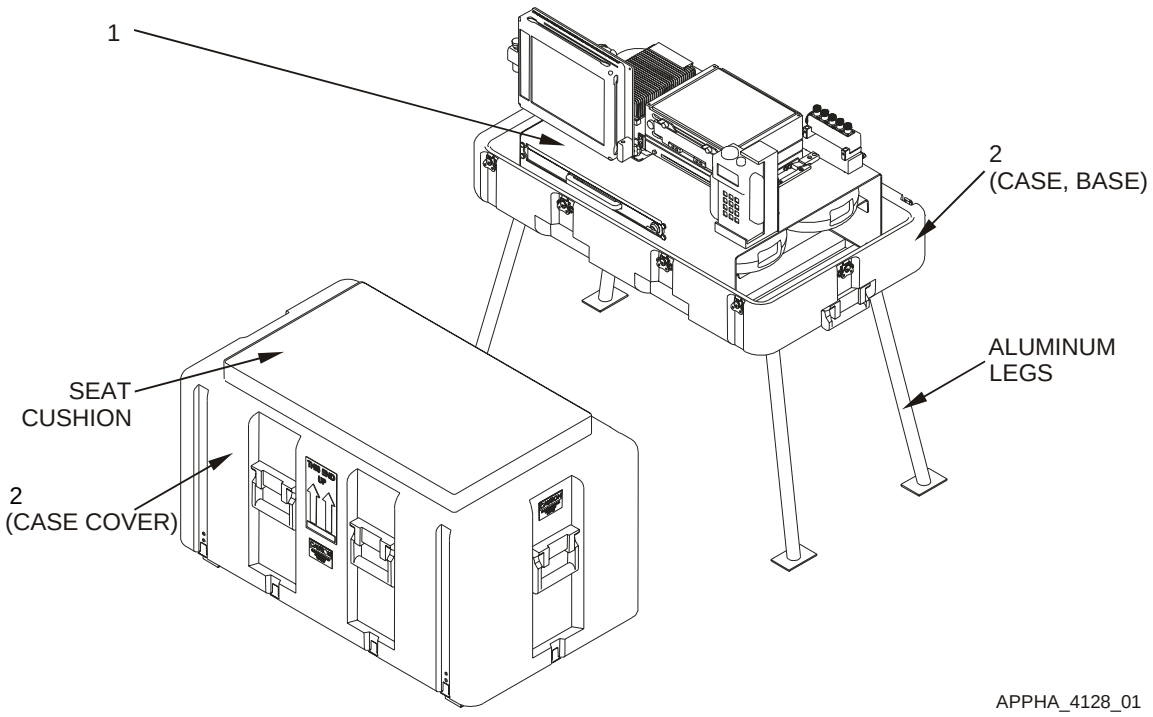

Figure AB-2. SICPS TENT Transit Case and Component Location

Key and Parts List for Figure AB-2

ITEM NO.	NOMENCLATURE	CAGE CODE	PART NUMBER	NSN	QTY	SMR
1	(SICPS TENT Equipment Rack) Rack, Electrical Equip	0J198	881287-1		1	XBOZZ
2	Case, Electronic Comm	11214	C881330-1		1	PAOZZ

AB–4.2 MOUNTING

Figure AB-3 shows the top and both sides of the Seat/Lid Assembly. The top of the case becomes a seat for the operator. The pad on top snaps in place and is stored inside the cover with the detachable legs. The Caution label indicates the SICPS TENT system weighs 152 pounds complete in its transit case and requires four persons to move it safely. Note that the "This Side Up" label indicates the SICPS TENT transit case must remain upright during use and stowage. Additional case hardware is shown in the parts list.

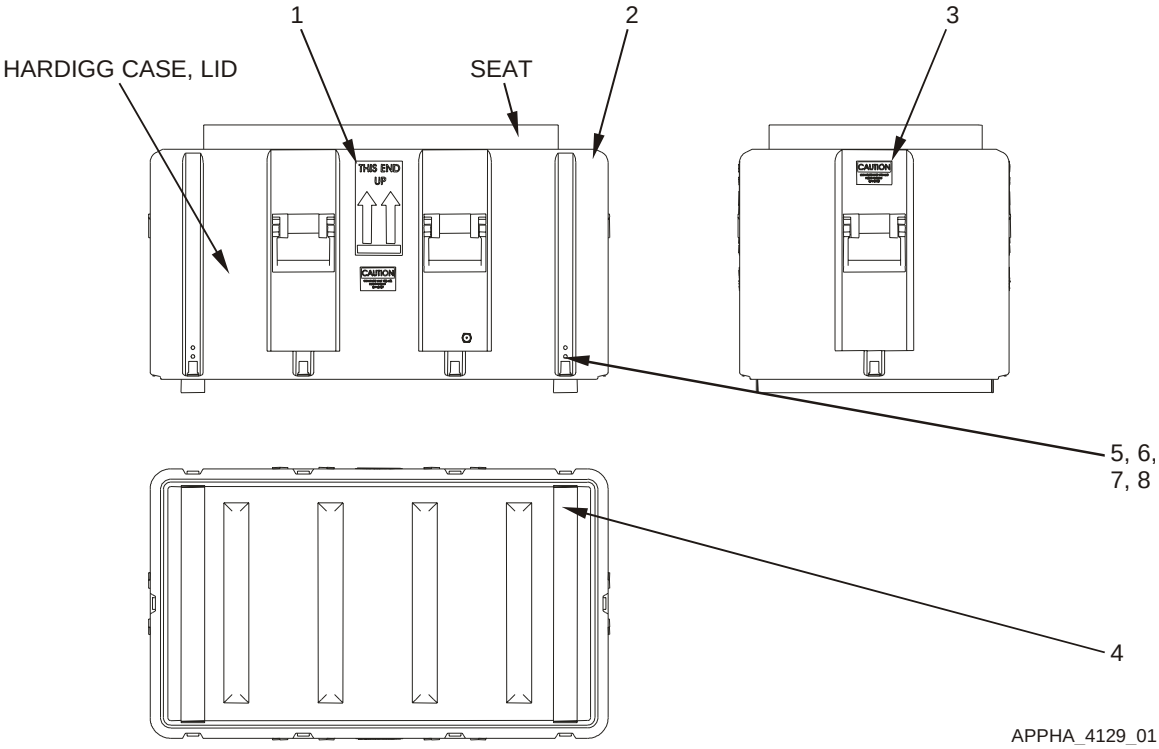

Figure AB-3. SICPS TENT Seat/Lid Assembly

Key and Parts List for Figure AB-3

ITEM NO.	NOMENCLATURE	CAGE CODE	PART NUMBER	NSN	QTY	SMR
1	Label, Shipping	39428	14385T16		2	PAOZZ
2	Case, Electronic Com	11214	C881330-1		1	PAOZZ
3	Label, Lifting Caution	0J198	881305-1		4	PAOZZ
4	Seat Support Base	0J198	881329-1		2	PAOZZ
--	--Case Hardware--					
5	Screw, Cap, Hexagon	80204	B1821AH025C150N	5305-01-466-7243	8	PAOZZ
6	Washer, Sealing	39428	93783A029		18	PAOZZ
7	Washer, Lock	96906	MS35338-44	5310-00-582-5965	8	PAOZZ
8	Nut, Plain, Hexagon	96906	MS35649-2252	5310-00-997-1888	8	PAOZZ
--	Screw, Cap, Hexagon	80204	B1821AH025C050N	5305-01-420-5112	10	PAOZZ

AB–4.2.1 COMPONENT MOUNTING IN SICPS TENT BASE

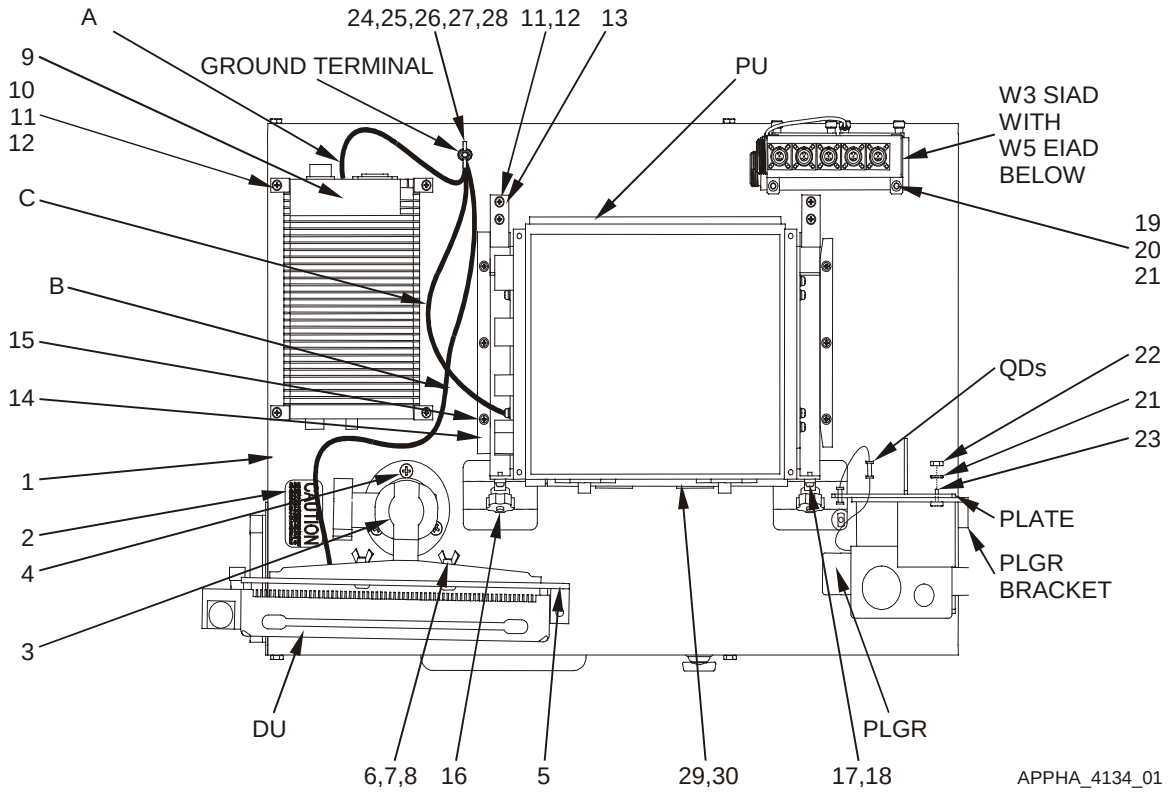

Figure AB-4. Top View SICPS TENT System Components in Base

Key and Parts List for Figure AB-4

ITEM NO.	NOMENCLATURE	CAGE CODE	PART NUMBER	NSN	QTY	SMR
1	Rack, Electrical Equip	0J198	881287-1		1	XBOZZ
2	Label, Lifting Caution	0J198	881305-1		4	PAOZZ
3	Mount, RAM-Ball	0J198	889489-1		1	PAOZZ
4	Screw, Flat Head	80205	MS35190-289	5305-00-958-5246	3	PAOZZ
5	Plate, Display Top	0J198	881272-1		1	XBODD
6	Screw, Flat Head	96906	MS35190-292	5305-00-990-1347	4	PAOZZ
7	Spacer, Aluminum	57177	10705AL315C		4	PAOZZ
8	Nut, Self-Locking, Wing	96906	MS51553-420	5310-01-384-2546	4	PAOZZ
9	External Power Module	0VUH7	JV20023		1	PAOZZ
10	Clamp, Power Supply	0J198	881287-12		4	PAOZZ
11	Screw, Machine	96906	MS35206-244	5305-00-984-6192	8	PAOZZ
12	Washer, Lock	96906	MS35338-42	5310-00-045-3299	8	PAOZZ
13	Retainer, PU Rear	0J198	881250-16		2	PAOZZ
14	Guide, PU	0J198	881250-15		2	PAOZZ
15	Screw, Machine	96906	MS35206-228	5305-00-984-4988	6	PAOZZ
16	Retainer, PU Front	81860	SLR-2-AB	5342-00-490-2118	2	PAOZZ
17	Screw, Machine	96906	MS35206-226	5305-00-984-4983	4	PAOZZ
18	Washer, Lock	96906	MS35338-41	5310-00-045-4007	4	PAOZZ
19	Bracket, Mounting, SIAD	0J198	881287-17		2	PAOZZ
20	Screw, Machine	96906	MS35207-265	5305-00-993-1848	6	PAOZZ
21	Washer, Lock	96906	MS35338-43	5310-00-045-3296	7	PAOZZ
--	PLGR Bracket	GFE				
22	Nut, Plain, Hexagon	96906	MS35650-302	5310-00-934-9751	1	PAOZZ
23	Screw, Machine	96906	MS35207-263	5305-00-989-7434	5	PAOZZ
--	PLGR Ground QD	GFE			2	
--	Strap, Ground, PU/EPM	0J198	F748092-1		2	PAOZZ
--	Strap, Ground, DU, 36"	0J198	F748092-6		1	PAOZZ
24	Nut, Self-Locking, Wing	96906	MS51553-420	5310-01-384-2546	1	PAOZZ
25	Nut, Plain, Hexagon	96906	MS35649-2252	5310-00-997-1888	1	PAOZZ
26	Washer, Lock	96906	MS35338-44	5310-00-582-5965	1	PAOZZ
27	Washer, Flat	96906	MS27183-10	5310-00-809-4058	2	PAOZZ
28	Screw, Cap, Hexagon	80204	B1821AH025C100N	5305-01-389-7984	1	PAOZZ
--	Assembly, PU Lock	0J198	861865-1		1	XBOOO
29	Bracket, Locking	0J198	861871-1		1	XBOZZ
30	Screw	80205	MS35190-253	5305-00-059-4568	2	PAOZZ

AB–4.2.2 COMPONENT MOUNTING LEFT SIDE VIEW

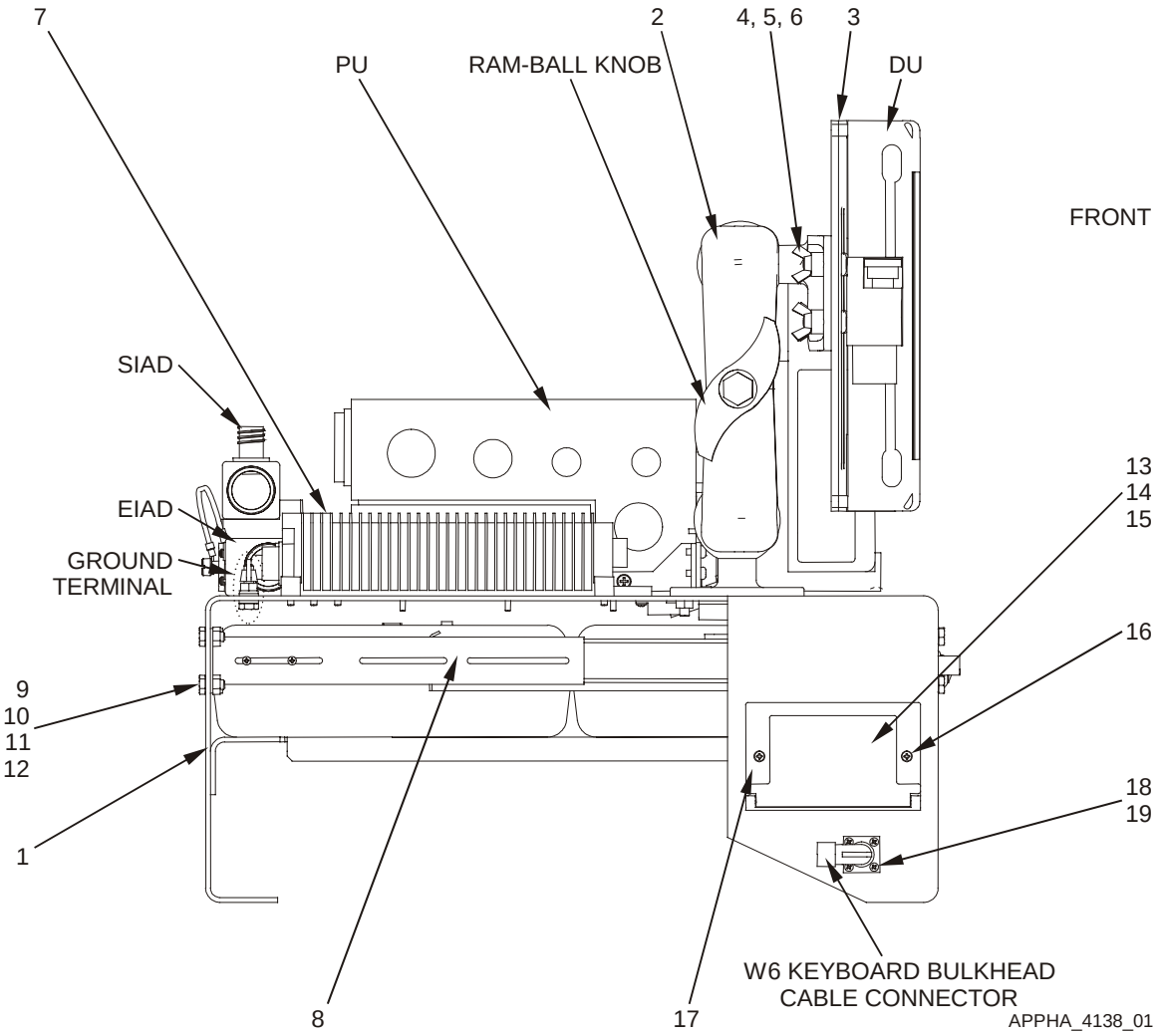

Figure AB-5. Left Side View SICPS TENT Equipment Rack

Key and Parts List for Figure AB-5

ITEM NO.	NOMENCLATURE	CAGE CODE	PART NUMBER	NSN	QTY	SMR
1	Rack, Electrical Equip	0J198	881287-1		1	XBOZZ
2	Mount, RAM-Ball	0J198	889489-1		1	PAOZZ
3	Plate, Display Top	0J198	881272-1		1	XBODD
4	Screw, Flat Head	96906	MS35190-292	5305-00-990-1347	4	PAOZZ
5	Spacer, Aluminum	57177	10705AL315C		4	PAOZZ
6	Nut, Self-Locking, Wing	96906	MS51553-420	5310-01-384-2546	4	PAOZZ
--	Ground Terminal					
--	Nut, Plain, Hexagon	96906	MS35649-2252	5310-00-997-1888	1	PAOZZ
--	Washer, Lock	96906	MS35338-44	5310-00-582-5965	1	PAOZZ
--	Washer, Flat	96906	MS27183-10	5310-00-809-4058	2	PAOZZ
--	Screw, Cap, Hexagon	80204	B1821AH025C100N	5305-01-389-7984	1	PAOZZ
--	Nut, Self-Locking, Wing	96906	MS51553-420	5310-01-384-2546	1	PAOZZ
7	External Power Module	0VUH7	JV20023		1	PAOZZ
8	Drawer, Electrical Equip	0J198	881332-1		1	PAOZZ
9	Screw, Machine	96906	MS35207-263	5305-00-989-7434	8	PAOZZ
10	Washer, Flat	96906	MS27183-8	5310-00-809-8546	8	PAOZZ
11	Washer, Lock	96906	MS35338-43	5310-00-045-3296	8	PAOZZ
12	Nut, Plain, Hexagon	96906	MS35650-302	5310-00-934-9751	8	PAOZZ
13	Cover	39428	7219K3		1	PAOZZ
14	Receptacle, GFCI	25795	5Z974		1	PAOZZ
15	Box, Single Gang, GFCI	39428	7219K23		1	XBOZZ
16	Screw Machine	96906	MS35190-238	5305-00-059-4553	6	PAOZZ
17	Screw, Machine	96906	MS35206-228	5305-00-984-4988	2	PAOZZ
18	Screw, Machine	96906	MS35206-214	5305-00-993-0190	4	PAOZZ
19	Washer, Lock	96906	MS35338-40	5310-00-045-3299	4	PAOZZ
--	Grip, Handle Assembly	0J198	861867-1		1	XBOOO
--	Screw, Machine	96906	MS35206-228	5305-00-984-4988	4	PAOZZ
--	Grip, Handle	0J198	861869-1		1	XBOZZ
--	Washer, Lock	96906	MS35338-41	5310-00-045-4007	4	PAOZZ
--	Tape, Shielding, Elect	39428	7648A34		1	XBOZZ

AB–5 PLATFORM-UNIQUE TROUBLESHOOTING

The SICPS TENT system allows operation from either +28VDC or 120VAC. The +28VDC source may be from any nearby vehicle. The 120VAC source may be from any land-line source, such as facility power or an AC generator. Proper grounding is a critical element with the SICPS TENT system. If this system is grounded to the source, and the source is not properly grounded, the situation is hazardous and the operator is in danger. A separate earth ground or auxiliary main line ground must always be connected when the SICPS TENT system is in use.

In the path of the +28VDC is an External Power Module (EPM) and several power cables (refer to Figure AB-1). When 120VAC is used, power is passed through a Ground Fault Circuit Interrupter (GFCI) receptacle. If the ground is lost for a short time, the GFCI will disconnect power and must be reset. The 120VAC passes through the same EPM where it is converted into +28VDC for the PU. The same power supply also activates the PLGR for GPS information.

Most installations that use this portable configuration will have one or several other AN/UYK-128(V) computers that wish to communicate through a land-line instead of, or in addition to, radio communications. To support the land-line, the W5 Expansion Interface Adapter Device (EIAD) is connected to the PU J5 connector. This provides connection to an external router through either a USB or LAN connection.

When troubleshooting the KU, there is an additional cable (W6) in the circuit. Both will require checking. Since the W6 keyboard bulkhead cable is an extension of the keyboard cable, plugging the KU directly into J2 of the DU will serve to check W6 cable for faults.

AB–5.1 SICPS TENT SYSTEM SAFETY SUMMARY

The following Warnings, Cautions, and Notes pertain specifically to the SICPS TENT system during Unit Maintenance actions. Close adherence to this information will prevent personnel injury, equipment damage, and allow safe and effective maintenance practice.

WARNING

The AN/UYK-128(V) SICPS TENT system weighs 152lbs., qualifying the system as a four-person lift. When moving the TENT system, ensure that proper assistance is available. Failure to do so may result in injury to personnel.

WARNING

The AN/UYK-128(V) SICPS TENT system with cover removed weighs 115lbs., and qualifies as a three-person lift. When moving the TENT system, ensure that proper assistance is available. Failure to do so may result in injury to personnel.

WARNING

Before conducting maintenance involving the removal or replacement of system components, ensure that all power to the FBCB2 system is off (including power from the vehicle). Failure to comply with warning may result in equipment damage or injury to personnel.

AB–5.1 SICPS TENT SYSTEM SAFETY SUMMARY (Continued)

WARNING

Do not disconnect or connect any cables without first properly powering down the system and turning off all power. Where applicable, always disconnect the ground cable last when disassembling and always connect the ground cable first when assembling. Failure to comply can cause injury to personnel or equipment damage.

WARNING

Ensure SICPS TENT is properly assembled. Ensure legs are properly installed with feet extending away from the base and placed on stable ground. Improper set-up can cause system to tip over, resulting in equipment damage and possible injury to personnel.

WARNING

For SICPS TENT system set-up/workstation location, ensure detachable legs and system cables are out of walkways and do not pose trip/snag hazards.

CAUTION

Before powering up system, make sure all devices are properly grounded to grounding lug on SICPS TENT system and that SICPS TENT system is properly grounded to an auxiliary main line. Failure to comply can cause equipment damage.

NOTE

Only the blue band should be visible on a properly mated connector. If the red band is showing, the connectors are not properly mated.

NOTE

Not all SICPS TENT system cables are disconnected when the unit is stowed. SICPS TENT system cables that are disconnected, however, are stored in the base of the transit case beneath the power cable reel assemblies.

AB–5.1 SICPS TENT SYSTEM SAFETY SUMMARY (Continued)

NOTE

Three ground straps must be fastened to the SICPS TENT equipment rack ground terminal: One each for the PU, DU, and External Power Module. The PLGR unit also must be grounded to the metal mounting plate.

NOTE

When the SICPS TENT equipment is set up on its legs or used on a tabletop, a user-provided earth ground must be connected from the ground terminal at the back of the SICPS TENT equipment rack to the ground stake or an auxiliary main line.

NOTE

The PLGR may be removed from its mount on the left front corner of the SICPS TENT equipment rack for use or storage elsewhere. If SICPS TENT unit is not equipped with a PLGR, obtain one from storage. If SICPS TENT unit is equipped with a PLGR, ensure the PLGR installation and cable connections are correct and secure.

NOTE

The SICPS TENT system may be operated using two different power sources. Power cable W1A may be connected to a 28 VDC power source, such as SINCGARS Mounting Base (MB). Power cable W1B may be connected to a 120 VAC facility or AC generator. These power cables are on reel assemblies mounted beneath the SICPS TENT equipment rack. Cable W1A-P1 (28 VDC), which has a 90-degree SINCGARS power connector, is mounted on the right side at the rear of the unit. Cable W1B-P1 (120 VAC), with a three-prong AC plug, is mounted at the right front.

NOTE

If the GFCI requires resetting, the operator must open the receptacle cover and press the extended GFCI switch to reset the circuit. If the GFCI switch does not remain set with power applied, check grounds, additional maintenance may be required (check grounds).

AB–6 REMOVAL/REPLACEMENT IN THE PLATFORM

Most installations must be tailored to the platform. Hardware and brackets are unique to the installation. Before a part or assembly is removed from a vehicle or platform, fill out a "Maintenance Request" DA Form 2407. One copy of this completed form must remain with the vehicle and the remaining copies must be kept with the faulty component. Items marked "Direct Support" are components that require disassembly in a workstation, not in the field. To prove the operability of the system after an item is replaced, perform the system Functional Check.

AB–6.1 FUNCTIONAL CHECK

AB–6.1.1 POWER UP

CAUTION

Before powering up system, make sure all devices are properly grounded to grounding lug on SICPS TENT system and that SICPS TENT system is properly grounded to an auxiliary main line. Failure to comply can cause equipment damage.

NOTE

When the SICPS TENT equipment is set up on its legs or used on a tabletop, a user-provided earth ground must be connected from the ground terminal at the back of the SICPS TENT equipment rack to the ground stake or an auxiliary main line.

NOTE

Three ground straps must be fastened to the SICPS TENT equipment rack ground terminal: One each for the PU, DU, and External Power Module. The PLGR unit also must be grounded to the metal mounting plate.

Power up and initialize all interface equipment and the AN/UYK-128(V) In Accordance With (IAW) the Operator's Manual TM 11-7010-326-10, or Pocket Guide TB 11-7010-326-10.

AB–6.1.2 VERIFICATION

NOTE

Observe that the Display Unit PWR, DISP and CPU green LED lights are lit.

a. Observe the PLGR synchronizes with PU, indicated by the PLGR dialog box showing green.

b. Observe that the Router synchronizes with the PU, indicated by the Router dialog box showing green.

c. At the Session Manager screen, select OPS button to display the OPS screen.

d. Verify the GPS status is either green or amber on the Classification/Status Bar.

e. Verify the Communications status is either green or amber on the Classification/Status Bar.

AB–6.1.3 POWER DOWN

Power down all interface equipment and the AN/UYK-128(V) IAW the Operator's Manual TM 11-7010-326-10, or Pocket Guide TB 11-7010-326-10.

AB–6.2 REMOVE/REPLACE POWER CABLES

Three of the five SICPS TENT power cables require Direct Support maintenance. The W1A, W1B, and W1C power cables require Direct Support maintenance for removal and replacement. They are mentioned here to describe their operational status and define the support functionality of each.

These three cables are mounted underneath the SICPS TENT equipment rack and require removal of additional components to facilitate their maintenance. When troubleshooting the SICPS TENT system, however, these power cables should be inspected to ensure they are securely connected and in their proper places. The W5 Expansion Interface Adapter Device (EIAD) also requires Direct Support maintenance.

The W1D PU power cable and W1E PLGR power cable are removed and replaced by Unit maintenance.

CAUTION

Inspect cables and connectors to ensure that there is no damage to equipment. Inspect all connections (including ground where applicable) to ensure that connectors are properly mated and secure. Failure to comply can cause equipment damage.

NOTE

Only the blue band should be visible on a properly mated connector. If the red band is showing, the connectors are not properly mated.

AB–6.3 INSPECT W1A POWER CABLE

Refer to Figure AB-7.

NOTE

The W1A power cable (28 VDC) is mounted on a reel assembly on the right rear of the SICPS TENT unit, and is plugged into an external power source such as a vehicle. The other end of the W1A power cable is connected to the EPM J2 connector.

a. Inspect and ensure W1A-P2 power cable connector (28 VDC) is securely connected to the EPM J2 connector. The W1A-P2 power cable connector normally remains connected to the EPM J2 connector when the SICPS TENT system is stowed.

b. Inspect and ensure W1A-P1 is securely connected to an external 28 VDC power source when selected.

AB–6.4 INSPECT W1B POWER CABLE

Refer to Figure AB-7.

NOTE

The W1B power cable (120 VAC) is mounted on a reel assembly on the right front of the SICPS TENT unit, and is plugged into a facility or generator receptacle. The other end of the W1B power cable is permanently wired to the GFCI receptacle inlet.

a. Inspect and ensure W1B-P1 is securely connected to a facility or AC generator receptacle when selected as the SICPS TENT system power source.

NOTE

If the GFCI requires resetting, the operator must open the receptacle cover and press the extended GFCI switch to reset the circuit. If the GFCI switch does not remain set with power applied, check ground, additional maintenance may be required.

b. Ensure the GFCI switch is not extended when 120 VAC power is applied.

AB–6.5 INSPECT W1C POWER CABLE

Refer to Figure AB-7.

NOTE

The W1C-P1 power cable (120 VAC) is permanently wired to the GFCI receptacle outlet.

a. Inspect and ensure W1C-P1 power cable (120 VAC) connector is securely connected to the EPM J1 connector. The W1C-P1 power cable connector (from the GFCI receptacle outlet) normally remains connected to the EPM J1 connector when the SICPS TENT system is stowed.

AB–6.6 REMOVE/REPLACE W1D PU POWER CABLE

Refer to Figure AB-7.

AB–6.6.1 REMOVE W1D PU POWER CABLE

WARNING

Before conducting maintenance involving the removal or replacement of system components, ensure that all power to the FBCB2 system is off (including power from the vehicle). Failure to comply with warning may result in equipment damage or injury to personnel.

a. Power down all interface equipment and the AN/UYK-128(V) IAW the Operator's Manual TM 11-7010-326-10, or Pocket Guide TB 11-7010-326-10.

NOTE

The SICPS TENT system may be operated using two different power sources. Power cable W1A may be connected to a 28 VDC power source, such as a vehicle. Power cable W1B may be connected to a 120 VAC facility or AC generator. These power cables are on reel assemblies mounted beneath the SICPS TENT equipment rack. Cable W1A-P1 (28 VDC), which has a 90-degree SINCGARS power connector, is mounted on the right side at the rear of the unit. Cable W1B-P1 (120 VAC), with a three-prong AC plug, is mounted at the right front.

b. For a 28 VDC power source, access the source vehicle's SINCGARS Mounting Base.

c. Unlatch and slide forward the Vehicle Amplifier Adapter (VAA) from Mounting Base (MB) IAW TM 11-5820-890-10-8, if required for access to power connector.

d. Disconnect W1A-P1 power cable connector from external platform MB (MT-6352/VRC) A4-J2 connector.

e. Slide SINCGARS VAA back into MB and fasten IAW TM 11-5820-10-8, if required.

f. Guide W1A-P1 cable onto reel assembly on rear right side of unit and ensure cable retracts to rubber stopper for proper stowage.

g. For a 120 VAC power source, unplug W1B-P1 three-prong plug from facility or generator receptacle.

h. Guide W1B-P1 cable onto reel assembly at front right side of unit and ensure cable retracts to rubber stopper for proper stowage.

i. Disconnect W1D-P1 PU power cable connector from EPM J3 connector on the forward outside corner of the EPM.

j. Disconnect W1D-P2 PU power cable connector from PU J1 connector.

k. Install protective cap on PU J1 connector.

NOTE

Note cable routing and tie-wrap locations before removing cable or tie-wraps.

l. Remove W1D PU power cable (3).

AB–6.6.2 REPLACE W1D PU POWER CABLE

NOTE

The SICPS TENT system may be operated using two different power sources. Power cable W1A may be connected to a 28 VDC power source, such as a vehicle. Power cable W1B may be connected to a 120 VAC facility or AC generator. These power cables are on reel assemblies mounted beneath the SICPS TENT equipment rack. Cable W1A-P1 (28 VDC), which has a 90-degree SINCGARS power connector, is mounted on the right side at the rear of the unit. Cable W1B-P1 (120 VAC), with a three-prong AC plug, is mounted at the right front.

a. Route W1D PU power cable (3) from forward outside corner of EPM to PU.

b. Connect W1D-P1 PU power cable connector to EPM J3 connector. (Normally, this cable remains connected when the SICPS TENT system is stowed.)

c. Remove protective cap from PU J1 connector.

d. Connect W1D-P2 PU power cable connector to PU J1 connector. (Normally, this cable remains connected when the SICPS TENT system is stowed.)

e. For a 28 VDC power source, access the source vehicle's SINCGARS Vehicle Amplifier Adapter (VAA).

f. Unlatch and slide forward the VAA from Mounting Base (MB) IAW TM 11-5820-890-10-8, if required for access to power connector.

g. Pull W1A-P1 power cable from rear reel and connect W1A-P1 cable connector to MB (MT-6352/VRC) A4-J2 connector.

h. Slide SINCGARS VAA back into MB and fasten IAW TM 11-5820-10-8, if required.

i. For a 120 VAC power source, pull W1B power cable from front reel and plug into facility or generator receptacle.

NOTE

If the GFCI requires resetting, the operator must open the receptacle cover and press the extended GFCI switch to reset the circuit. If the GFCI switch does not remain set with power applied, check ground, additional maintenance may be required.

j. Perform Functional Check IAW paragraph AB–6.1.

AB–6.7 REMOVE/REPLACE W1E PLGR POWER CABLE

Refer to Figure AB-7.

AB–6.7.1 REMOVE W1E PLGR POWER CABLE IN-LINE FUSE

WARNING

Before conducting maintenance involving the removal or replacement of system components, ensure that all power to the FBCB2 system is off (including power from the vehicle). Failure to comply with warning may result in equipment damage or injury to personnel.

a. Power down all interface equipment and the AN/UYK-128(V) IAW the Operator's Manual TM 11-7010-326-10, or Pocket Guide TB 11-7010-326-10.

NOTE

The SICPS TENT system may be operated using two different power sources. Power cable W1A may be connected to a 28 VDC power source, such as a vehicle. Power cable W1B may be connected to a 120 VAC facility or AC generator. These power cables are on reel assemblies mounted beneath the SICPS TENT equipment rack. Cable W1A-P1 (28 VDC), which has a 90-degree SINCGARS power connector, is mounted on the right side at the rear of the unit. Cable W1B-P1 (120 VAC), with a three-prong AC plug, is mounted at the right front.

b. For a 28 VDC power source, access the source vehicle's SINCGARS Mounting Base.

c. Unlatch and slide forward the Vehicle Amplifier Adapter (VAA) from Mounting Base (MB) IAW TM 11-5820-890-10-8, if required for access to power connector.

d. Disconnect W1A-P1 power cable connector from external platform MB (MT-6352/VRC) A4-J2 connector.

e. Slide SINCGARS VAA back into MB and fasten IAW TM 11-5820-10-8, if required.

f. Guide W1A-P1 cable onto reel assembly on rear right side of unit and ensure cable retracts to rubber stopper for proper stowage.

g. For a 120 VAC power source, unplug W1B-P1 three-prong plug from facility or generator receptacle.

h. Guide W1B-P1 cable onto reel assembly at front right side of unit and ensure cable retracts to rubber stopper for proper stowage.

i. Access W1E PLGR power cable in-line fuse cartridge (yellow plastic device) under SICPS TENT equipment rack beneath EPM.

j. Remove fuse from fuse cartridge (8).

AB–6.7.2 REPLACE W1E PLGR POWER CABLE IN-LINE FUSE

a. Install new two-amp fuse in W1E PLGR power cable in-line fuse cartridge (8).

b. Stow W1E PLGR power cable in-line fuse cartridge under SICPS TENT equipment rack beneath EPM.

NOTE

The SICPS TENT system may be operated using two different power sources. Power cable W1A may be connected to a 28 VDC power source, such as a vehicle. Power cable W1B may be connected to a 120 VAC facility or AC generator. These power cables are on reel assemblies mounted beneath the SICPS TENT equipment rack. Cable W1A-P1 (28 VDC), which has a 90-degree SINCGARS power connector, is mounted on the right side at the rear of the unit. Cable W1B-P1 (120 VAC), with a three-prong AC plug, is mounted at the right front.

c. For a 28 VDC power source, access the source vehicle's SINCGARS Vehicle Amplifier Adapter (VAA).

d. Unlatch and slide forward the VAA from Mounting Base (MB) IAW TM 11-5820-890-10-8, if required for access to power connector.

e. Pull W1A-P1 power cable from rear reel and connect W1A-P1 cable connector to MB (MT-6352/VRC) A4-J2 connector.

f. Slide SINCGARS VAA back into MB and fasten IAW TM 11-5820-10-8, if required.

g. For a 120 VAC power source, pull W1B power cable from front reel and plug into facility or generator receptacle.

NOTE

If the GFCI requires resetting, the operator must open the receptacle cover and press the extended GFCI switch to reset the circuit. If the GFCI switch does not remain set with power applied, check ground and AC power connections.

h. Perform Functional Check IAW paragraph AB–6.1.

NOTE

If new fuse fails, perform fault isolation as follows:

1) Check GFCI reset switch and reset circuit if necessary.
2) Remove and replace W1E PLGR power cable and perform system Functional Check.
3) Remove and replace PLGR and perform system Functional Check.
4) Remove and replace EPM and perform system Functional Check.
5) If fuse failure recurs, return SICPS TENT system to Direct Support Maintenance.

AB–6.7.3 REMOVE W1E PLGR POWER CABLE

WARNING

Before conducting maintenance involving the removal or replacement of system components, ensure that all power to the FBCB2 system is off (including power from the vehicle). Failure to comply with warning may result in equipment damage or injury to personnel.

a. Power down all interface equipment and the AN/UYK-128(V) IAW the Operator's Manual TM 11-7010-326-10, or Pocket Guide TB 11-7010-326-10.

NOTE

The SICPS TENT system may be operated using two different power sources. Power cable W1A may be connected to a 28 VDC power source, such as a vehicle. Power cable W1B may be connected to a 120 VAC facility or AC generator. These power cables are on reel assemblies mounted beneath the SICPS TENT equipment rack. Cable W1A-P1 (28 VDC), which has a 90-degree SINCGARS power connector, is mounted on the right side at the rear of the unit. Cable W1B-P1 (120 VAC), with a three-prong AC plug, is mounted at the right front.

b. For a 28 VDC power source, access the source vehicle's SINCGARS Mounting Base.

c. Unlatch and slide forward the Vehicle Amplifier Adapter (VAA) from (MB) IAW TM 11-5820-890-10-8, if required for access to power connector.

d. Disconnect W1A-P1 power cable connector from external platform MB (MT-6352/VRC) A4-J2 connector.

e. Slide SINCGARS VAA back into MB and fasten IAW TM 11-5820-10-8, if required.

f. Guide W1A-P1 cable onto reel assembly on rear right side of unit and ensure cable retracts to rubber stopper for proper stowage.

g. For a 120 VAC power source, unplug W1B-P1 three-prong plug from facility or generator receptacle.

h. Guide W1B-P1 cable onto reel assembly at front right side of unit and ensure cable retracts to rubber stopper for proper stowage.

i. Remove PLGR from mounting bracket.

j. Disconnect W1E-P2 PLGR power cable connector from PLGR J4 connector in back of PLGR.

k. Install protective connector cover on PLGR J4 connector.

l. Disconnect W1E-P1 PLGR power cable connector from EPM J4 connector next to the RAM-Ball Assembly.

NOTE

Note cable routing and tie-wrap locations before removing cable or tie-wraps.

m. Gently pull cable under rack from W1E-P1 end at EPM and feed W1E-P2 PLGR power cable and connector through opening in top of equipment rack behind PLGR to remove.

n. Remove W1E PLGR power cable (7).

AB–6.7.4 REPLACE W1E PLGR POWER CABLE

a. Feed W1E-P2 PLGR power cable (7) and connector under equipment rack starting at EPM and gently pull up through opening in top of equipment rack behind PLGR.

b. Remove protective cap from PLGR J4 connector in back of PLGR.

c. Connect W1E-P2 PLGR power cable connector to PLGR J4 connector.

d. Install PLGR into mounting bracket.

e. Connect W1E-P1 PLGR power cable connector to EPM J4 connector next to the RAM-Ball Assembly. (Normally, this cable remains connected when the SICPS TENT system is stowed, provided the PLGR is not removed from the equipment rack.)

NOTE

The SICPS TENT system may be operated using two different power sources. Power cable W1A may be connected to a 28 VDC power source, such as a vehicle. Power cable W1B may be connected to a 120 VAC facility or AC generator. These power cables are on reel assemblies mounted beneath the SICPS TENT equipment rack. Cable W1A-P1 (28 VDC), which has a 90-degree SINCGARS power connector, is mounted on the right side at the rear of the unit. Cable W1B-P1 (120 VAC), with a three-prong AC plug, is mounted at the right front.

f. For a 28 VDC power source, access the source vehicle's SINCGARS Vehicle Amplifier Adapter (VAA).

g. Unlatch and slide forward the VAA from Mounting Base (MB) IAW TM 11-5820-890-10-8, if required for access to power connector.

h. Pull W1A-P1 power cable from rear reel and connect W1A-P1 cable connector to MB (MT-6352/VRC) A4-J2 connector.

i. Slide SINCGARS VAA back into MB and fasten IAW TM 11-5820-10-8, if required.

j. For a 120 VAC power source, pull W1B power cable from front reel and plug into facility or generator receptacle.

NOTE

If the GFCI requires resetting, the operator must open the receptacle cover and press the extended GFCI switch to reset the circuit. If the GFCI switch does not remain set with power applied, check ground, additional maintenance may be required.

k. Perform Functional Check IAW paragraph AB–6.1.

AB–6.8 REMOVE/REPLACE W2 DISPLAY CABLE

Refer to Figure AB-7.

AB–6.8.1 REMOVE W2 DISPLAY CABLE

WARNING

Before conducting maintenance involving the removal or replacement of system components, ensure that all power to the FBCB2 system is off (including power from the vehicle). Failure to comply with warning may result in equipment damage or injury to personnel.

a. Power down all interface equipment and the AN/UYK-128(V) IAW the Operator's Manual TM 11-7010-326-10, or Pocket Guide TB 11-7010-326-10.

b. Disconnect W2-P1 display cable connector from PU J4 connector.

c. Install protective cap on PU J4 connector.

d. Disconnect W2-P2 display cable connector from display J1 connector.

e. Install protective cap on DU J1 connector.

NOTE

Note cable routing outside and behind external power module (EPM) and location of tie-wraps before removing cable or tie-wraps.

f. Remove tie-wraps securing W2 cable and ground strap, if necessary, using diagonal wire cutters.

g. Remove W2 cable (4).

AB–6.8.2 REPLACE W2 DISPLAY CABLE

a. Route W2 display cable (4) outside and behind EPM from DU to PU.

b. Remove protective cap from DU J1 connector.

c. Connect W2-P2 display cable connector to display J1 connector.

d. Remove protective cap from PU J4 connector.

e. Connect W2-P1 display cable connector to PU J4 connector.

NOTE

Ensure W2 display cable and display ground strap allow enough freedom of movement for display to rotate 180 degrees for stowage.

f. Bundle W2 display cable to display ground strap and W6 keyboard bulkhead cable as necessary using tie-wraps.

g. Dress tie-wraps using diagonal wire cutters.

h. Perform Functional Check IAW paragraph AB–6.1.

AB–6.9 REMOVE/REPLACE W3 SERIAL INTERFACE ADAPTER DEVICE (SIAD)

Refer to Figure AB-6.

AB–6.9.1 REMOVE W3 SERIAL INTERFACE ADAPTER DEVICE (SIAD)

WARNING

Before conducting maintenance involving the removal or replacement of system components, ensure that all power to the FBCB2 system is off (including power from the vehicle). Failure to comply with warning may result in equipment damage or injury to personnel.

a. Power down all interface equipment and the AN/UYK-128(V) IAW the Operator's Manual TM 11-7010-326-10, or Pocket Guide TB 11-7010-326-10.

b. Disconnect W3 SIAD P1 cable connector from PU J3 connector.

c. Install protective cap on PU J3 connector.

d. Disconnect W3N-P1 INC cable connector from W3 SIAD J1 connector.

e. Disconnect W3P-P1 PLGR cable connector from W3 SIAD J2 connector.

f. Unfasten two (2) self-locking front retainers on PU until sleeve clears front hook (IAW Unit Maintenance Manual, TM 11-7010-326-20&P, Chapter 2) and slide PU forward to access SIAD mounting bracket screw behind PU.

g. Remove two (2) pan head screws and lock washers from L-shaped SIAD mounting brackets and SIAD connector block using a No. 2 cross-tip screwdriver.

h. Ensure SIAD mounting brackets remain securely fastened to top of W5 Expansion Interface Adapter Device (EIAD).

NOTE

Note cable routing and tie-wrap locations before removing cable or tie-wraps.

i. Remove tie-wraps securing W3 SIAD using diagonal wire cutters.

j. Remove W3 SIAD (10).

AB–6.9.2 REPLACE W3 SERIAL INTERFACE ADAPTER DEVICE (SIAD)

a. Align SIAD connector block holes with holes in L-shaped mounting brackets on top of EIAD and route W3 SIAD P1 (10) cable to PU.

b. Secure SIAD connector block to mounting brackets with two (2) pan head screws and lock washers using a No. 2 cross-tip screwdriver.

c. Reposition PU between installation guides snuggly against back retainers, and secure sleeves of two (2) self-locking front retainers over front hooks (IAW Unit Maintenance Manual, TM 11-7010-326-20&P, Chapter 2).

d. Connect W3P-P1 PLGR cable connector to W3 SIAD J2 connector.

e. Connect W3N-P1 INC cable connector to W3 SIAD J1 connector.

f. Remove protective cap from PU J3 connector.

g. Connect W3 SIAD P1 cable connector to PU J3 connector.

h. Secure W3 SIAD (10) using tie-wraps.

i. Dress tie-wraps using diagonal wire cutters.

j. Perform Functional Check IAW paragraph AB–6.1.

AB–6.10 INSPECT W5 EIAD

Refer to Figure AB-6.

NOTE

The W5 EIAD provides capability for the SICPS TENT system to be connected to other platforms via the J1 Ethernet, or Local Area Network (LAN) connector, or to other computers via the J2 Universal Serial Bus (USB) connector. The cables routed to the SICPS TENT system ETH J1 connector or USB J2 connector are user-provided.

NOTE

Two (2) pan head screws and lock washers secure the W5 EIAD in place on the SICPS TENT equipment rack. However, these screws are inserted from under the equipment rack and additional components must be removed to facilitate this activity. Therefore, removing and replacing the W5 EIAD is a Direct Support maintenance action.

a. Inspect and ensure the Expansion Interface Adapter Device (EIAD) is securely mounted on its side at the rear of the SICPS TENT equipment rack along side the PU.

b. Ensure user-provided cables are securely connected to ETH J1 connector or USB J2 connector as required.

c. Inspect and ensure the W5-P1 EIAD (2) cable connector is securely connected to the PU J5 connector. (This connector normally remains connected when SICPS TENT system is stowed.)

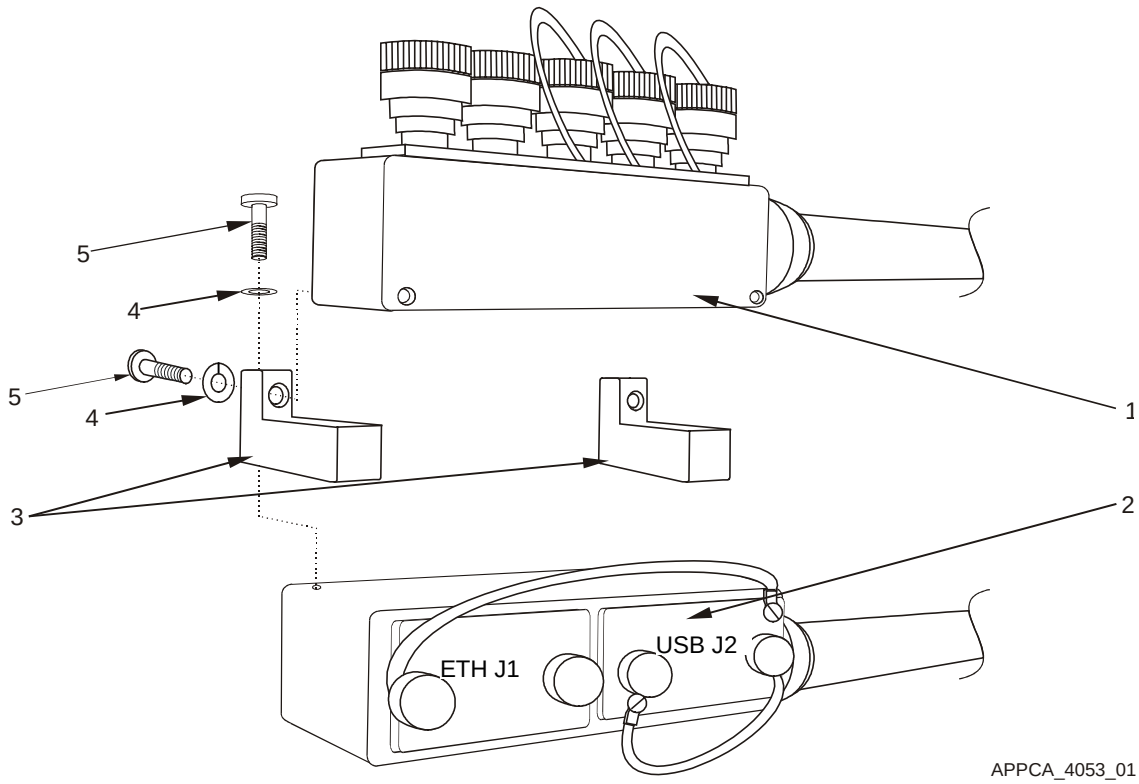

Figure AB-6. W3 SIAD Mounts on Top of W5 EIAD

Key and Parts List for Figure AB-6

ITEM NO.	NOMENCLATURE	CAGE CODE	PART NUMBER	NSN	QTY	SMR
1	Adapter Assy, SIAD, W3	0J198	881331-1	4920-01-478-3722	1	PAODD
2	Adapter Assy, EIAD, W5	0J198	881288-1 (DS)	4920-01-478-3728	1	PAODD
3	Bracket, Mounting, SIAD	0J198	881287-17		2	PAOZZ
4	Washer, Lock	96906	MS35338-43	5310-00-045-3296	6	PAOZZ
5	Screw, Machine	96906	MS35207-265	5305-00-993-1848	6	PAOZZ

AB–6.11 REMOVE/REPLACE W3N INC SERIAL CABLE

Refer to Figure AB-7.

AB–6.11.1 REMOVE W3N INC CABLE

WARNING

Before conducting maintenance involving the removal or replacement of system components, ensure that all power to the FBCB2 system is off (including power from the vehicle). Failure to comply with warning may result in equipment damage or injury to personnel.

a. Power down all interface equipment and the AN/UYK-128(V) IAW the Operator's Manual TM 11-7010-326-10, or Pocket Guide TB 11-7010-326-10.

b. Disconnect W3N-P1 INC cable connector from W3 SIAD J1 connector.

c. Access SINCGARS unit of interfacing external platform, if necessary.

d. Disconnect W3N-P2 INC cable connector from SINCGARS/INC A2-J6 connector.

e. Remove W3N cable (12).

AB–6.11.2 REPLACE W3N INC CABLE

WARNING

For SICPS TENT system set up/workstation location, ensure detachable legs and system cables are out of walkways and do not pose trip/snag hazards.

NOTE

In order to perform AN/UYK-128(V) system Functional Check, SICPS TENT must be connected to interfacing external platform for Internet Controller access.

a. Route W3N-P2 INC (12) cable from SICPS TENT system W3 SIAD to SINCGARS unit of interfacing external platform, as required.

b. Connect W3N-P2 INC cable connector to SINCGARS/INC A2-J6 connector.

c. Connect W3N-P1 INC cable connector to W3 SIAD J1 connector.

d. Perform Functional Check IAW paragraph AB–6.1.

AB–6.12 REMOVE/REPLACE W3P PLGR SERIAL CABLE

Refer to Figure AB-7.

AB–6.12.1 REMOVE W3P PLGR CABLE

WARNING

Before conducting maintenance involving the removal or replacement of system components, ensure that all power to the FBCB2 system is off (including power from the vehicle). Failure to comply with warning may result in equipment damage or injury to personnel.

a. Power down all interface equipment and the AN/UYK-128(V) IAW the Operator's Manual TM 11-7010-326-10, or Pocket Guide TB 11-7010-326-10.

NOTE

If PLGR is installed in SICPS TENT system, perform the following steps. The PLGR also may be removed from its mount on the left front corner of the SICPS TENT equipment rack for use or storage elsewhere.

b. Disconnect W3P-P1 PLGR cable connector from W3 SIAD J2 connector.

c. Unfasten over-center latch and lift PLGR from mounting bracket.

d. Disconnect W3P-P2 PLGR cable connector from PLGR J2 connector using an offset flat-tip screwdriver.

e. Remove W3P cable (11).

AB–6.12.2 REPLACE W3P PLGR CABLE

a. Route PLGR W3P (11) cable from W3 SIAD to PLGR. Coil and stow excess W3P cable under SICPS TENT equipment rack.

b. Connect W3P-P2 PLGR cable connector to PLGR J2 connector using an offset flat-tip screwdriver.

c. Install PLGR in mounting bracket and fasten over-center latch.

d. Connect W3P-P1 PLGR cable connector to W3 SIAD J2 connector.

e. Perform Functional Check IAW paragraph AB–6.1.

AB–6.13 REMOVE/REPLACE W6 KEYBOARD BULKHEAD CABLE

Refer to Figure AB-7.

AB–6.13.1 REMOVE W6 KEYBOARD BULKHEAD CABLE

WARNING

Before conducting maintenance involving the removal or replacement of system components, ensure that all power to the FBCB2 system is off (including power from the vehicle). Failure to comply with warning may result in equipment damage or injury to personnel.

a. Power down all interface equipment and the AN/UYK-128(V) IAW the Operator's Manual TM 11-7010-326-10, or Pocket Guide TB 11-7010-326-10.

b. Disconnect W6-P2 keyboard bulkhead cable connector from display J2 connector.

c. Install protective cap on display J2 connector.

NOTE

Cable attached to keyboard remains connected to keyboard in drawer and at back of keyboard bulkhead connector behind equipment rack.

d. Disconnect W6-P1 keyboard bulkhead cable connector from the SICPS TENT bulkhead connector on the outside of the equipment rack below the ground fault circuit interrupter (GFCI) receptacle.

NOTE

Note cable routing and tie-wrap locations before removing cable or tie-wraps.

e. Remove tie-wraps securing W6 cable using diagonal wire cutters.

f. Remove W6 (5) keyboard bulkhead cable.

AB–6.13.2 REPLACE W6 KEYBOARD BULKHEAD CABLE

a. Route W6 (5) keyboard bulkhead cable from DU to SICPS TENT bulkhead connector on outside of equipment rack below GFCI receptacle.

b. Connect W6-P1 keyboard bulkhead cable connector to the bulkhead connector on the outside of the equipment rack.

c. Remove protective cap from display J2 connector.

d. Connect W6-P2 keyboard bulkhead cable connector to display J2 connector.

e. Secure W6 keyboard bulkhead cable to W2 display cable and DU ground strap using tie-wraps.

f. Dress tie-wraps using diagonal wire cutters.

g. Perform Functional Check IAW paragraph AB–6.1.

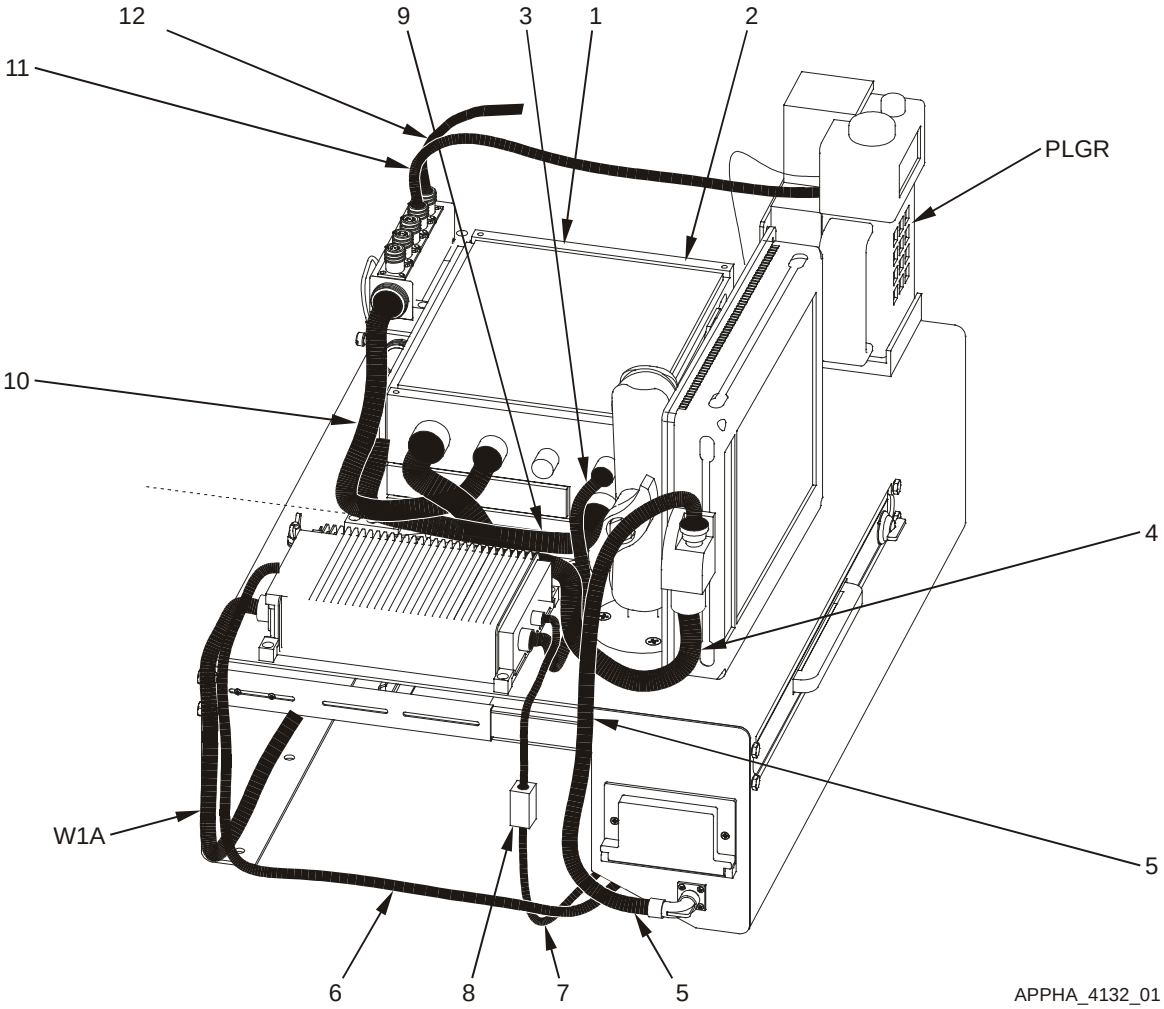

Figure AB-7. SICPS TENT Cables General Layout

Key and Parts List for Figure AB-7

ITEM NO.	NOMENCLATURE	CAGE CODE	PART NUMBER	NSN	QTY	SMR
1	Reel Assembly, W1A	0J198	881317-1 (DS)		1	PAOZZ
2	Reel Assembly, W1B	0J198	881317-2 (DS)		1	PAOZZ
3	Cable Assembly, W1D	0J198	881321-1	5995-01-478-4862	1	PAODD
4	Cable Assembly W2	0J198	881327-1	5995-01-478-4876	1	PAODD
5	Cable Assembly W6	0J198	881289-1	5995-01-478-4921	1	PAODD
6	Cable Assembly, W1C	0J198	881319-1 (DS)		1	PAODD
7	Cable Assembly, W1E	0J198	881326-1	5995-01-478-4866	1	PAODD
8	Fuse, Cartridge, 2A	81336	3Z26025	5920-00-280-5062	1	PAOZZ
9	Adapter Assy, EIAD, W5	0J198	881288-1 (DS)	4920-01-478-3728	1	PAODD
10	Adapter Assy, SIAD, W3	0J198	881331-1	4920-01-478-3722	1	PAODD
11	Cable Assembly W3P	0J198	881335-1	5995-01-478-4891	1	PAODD
12	Cable Assembly, W3N	0J198	881336-4	5995-01-478-4926	1	PAODD
--	Strap, Tie Down, Elect	39428	7130K31	AR	50	PAOZZ
--	Holder, Cable, Tie 2w	39428	7566K27	AR	25	PAOZZ
--	Strap, DU Ground, 36"	0J198	F748092-6		1	PAOZZ

AB–6.14 REMOVE/REPLACE EXTERNAL POWER MODULE (EPM)

Refer to Figure AB-8.

AB–6.14.1 REMOVE EXTERNAL POWER MODULE (EPM)

WARNING

Before conducting maintenance involving the removal or replacement of system components, ensure that all power to the FBCB2 system is off (including power from the vehicle). Failure to comply with warning may result in equipment damage or injury to personnel.

WARNING

Do not disconnect or connect any cables without first properly powering down the system and turning off all power. Where applicable, always disconnect the ground cable last when disassembling and always connect the ground cable first when assembling. Failure to comply can cause injury to personnel or equipment damage.

a. Power down all interface equipment and the AN/UYK-128(V) IAW the Operator's Manual TM 11-7010-326-10, or Pocket Guide TB 11-7010-326-10.

NOTE

The SICPS TENT system may be operated using two different power sources. Power cable W1A may be connected to a 28 VDC power source, such as a vehicle. Power cable W1B may be connected to a 120 VAC facility or AC generator. These power cables are on reel assemblies mounted beneath the SICPS TENT equipment rack. Cable W1A-P1 (28 VDC), which has a 90-degree SINCGARS power connector, is mounted on the right side at the rear of the unit. Cable W1B-P1 (120 VAC), with a three-prong AC plug, is mounted at the right front.

b. For a 28 VDC power source, access the source vehicle's SINCGARS VAA.

c. Unlatch and slide forward the Vehicle Amplifier Adapter (VAA) from Mounting Base (MB) IAW TM 11-5820-890-10-8, if required for access to power connector.

d. Disconnect W1A-P1 power cable connector from external platform MB (MT-6352/VRC) A4-J2 connector.

e. Slide SINCGARS VAA back into MB and fasten IAW TM 11-5820-10-8, if required.

f. Guide W1A-P1 cable onto reel assembly on rear right side of unit and ensure cable retracts to rubber stopper for proper stowage.

g. For a 120 VAC power source, unplug W1B-P1 three-prong plug from facility or generator receptacle.

h. Guide W1B-P1 cable onto reel assembly at front right side of unit and ensure cable retracts to rubber stopper for proper stowage.

AB–6.14.1 REMOVE EXTERNAL POWER MODULE (EPM) (Continued)

i. Disconnect W1C-P1 power cable connector (120 VAC) from EPM J1 connector.

j. Disconnect W1A-P2 power cable connector (28 VDC) from EPM J2 connector.

k. Disconnect W1D-P1 PU power cable connector from EPM J3 connector.

l. Disconnect W1E-P1 PLGR power cable connector from EPM J4 connector.

m. Remove one GFE screw, lock washer, and flat washer using a No. 1 cross-tip screwdriver and remove the EPM ground strap from the side of the EPM.

n. Loosen four pan head screws (2) and lock washers (3) securing EPM hold-down clamps (4) using a No. 2 cross-tip screwdriver.

o. Pivot clamps 90 degrees off EPM mounting brackets.

p. Lift EPM (1) off SICPS TENT equipment rack (5).

AB–6.14.2 REPLACE EXTERNAL POWER MODULE (EPM)

a. Align EPM mounting brackets with hold-down clamps (4) on SICPS TENT equipment rack.

b. Pivot clamps 90 degrees onto EPM mounting brackets.

c. Tighten four pan head screws (2) and lock washers (3) using a No. 2 cross-tip screwdriver to secure EPM hold-down clamps.

d. Install one GFE screw, EPM ground strap, lock washer, and flat washer using a No. 1 cross-tip screwdriver and secure ground strap to EPM.

e. Connect W1E-P1 PLGR power cable connector to EPM J4 connector.

f. Connect W1D-P1 PU power cable connector to EPM J3 connector.

g. Connect W1A-P2 power cable connector (28 VDC) to EPM J2 connector.

h. Connect W1C-P1 power cable connector (120 VAC) to EPM J1 connector.

NOTE

The SICPS TENT system may be operated using two different power sources. Power cable W1A may be connected to a 28 VDC power source, such as a vehicle. Power cable W1B may be connected to a 120 VAC facility or AC generator. These power cables are on reel assemblies mounted beneath the SICPS TENT equipment rack. Cable W1A-P1 (28 VDC), which has a 90-degree SINCGARS power connector, is mounted on the right side at the rear of the unit. Cable W1B-P1 (120 VAC), with a three-prong AC plug, is mounted at the right front.

i. For a 28 VDC power source, access the source vehicle's SINCGARS Vehicle Amplifier Adapter (VAA).

AB–6.14.2 REPLACE EXTERNAL POWER MODULE (EPM) (Continued)

j. Unlatch and slide forward the VAA from Mounting Base (MB) IAW TM 11-5820-890-10-8, if required for access to power connector.

k. Pull W1A-P1 power cable from rear reel and connect W1A-P1 cable connector to MB (MT-6352/VRC) A4-J2 connector.

l. Slide SINCGARS VAA back into MB and fasten IAW TM 11-5820-10-8, if required.

m. For a 120 VAC power source, pull W1B power cable from front reel and plug into facility or generator receptacle.

NOTE

If the GFCI requires resetting, the operator must open the receptacle cover and press the extended GFCI switch to reset the circuit. If the GFCI switch does not remain set with power applied, check grounds, additional maintenance may be required.

n. Perform Functional Check IAW paragraph AB–6.1.

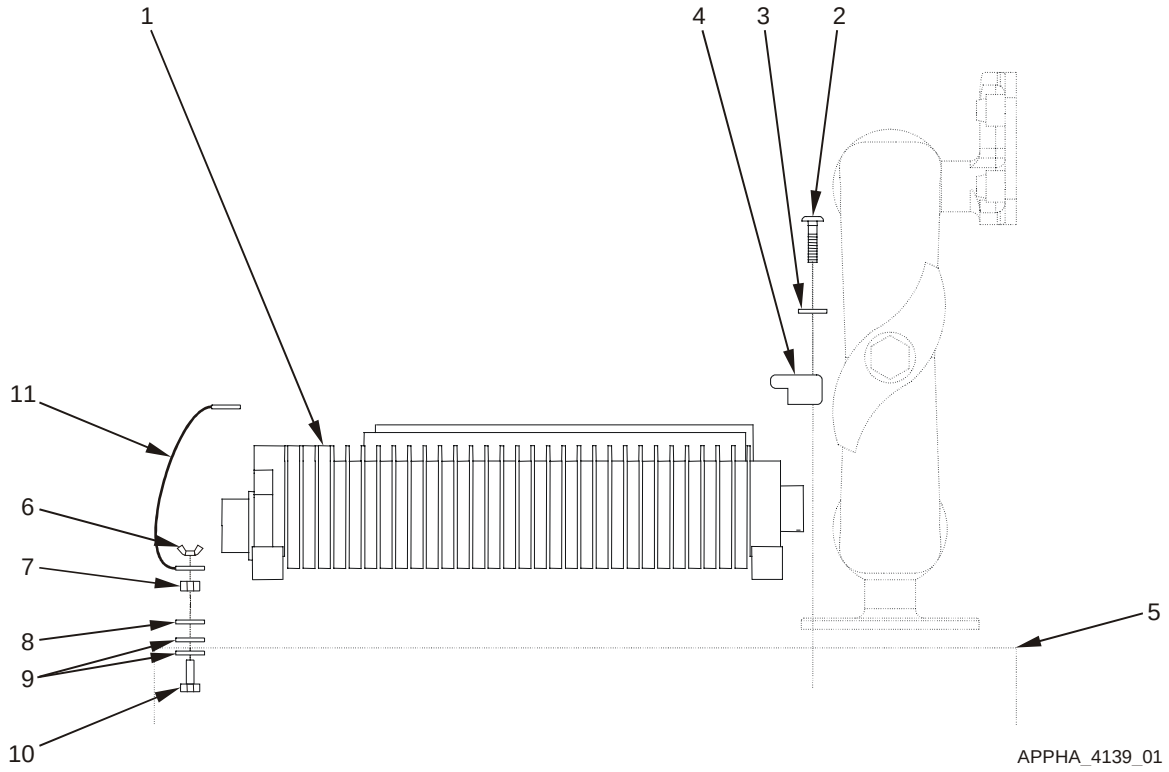

Figure AB-8. Remove and Replace External Power Module

Key and Parts List for Figure AB-8

ITEM NO.	NOMENCLATURE	CAGE CODE	PART NUMBER	NSN	QTY	SMR
1	External Power Module	0VUH7	JV20023		1	PAOZZ
2	Screw, Machine	96906	MS35206-244	5305-00-984-6192	8	PAOZZ
3	Washer, Lock	96906	MS35338-42	5310-00-045-3299	8	PAOZZ
4	Clamp, Power Supply, EPM	0J198	881287-12		4	PAOZZ
5	Rack, Electrical Equip	0J198	881287-1		1	XBOZZ
6	Nut, Self-Locking, Wing	96906	MS51553-420	5310-01-384-2546	5	PAOZZ
7	Nut, Plain, Hexagon	96906	MS35649-2252	5310-00-997-1888	2	PAOZZ
8	Washer, Lock	96906	MS35338-44	5310-00-582-5965	2	PAOZZ
9	Washer, Flat	96906	MS27183-10	5310-00-809-4058	2	PAOZZ
10	Screw, Cap, Hexagon	80204	B1821AH025C100N	5305-01-389-7984	10	PAOZZ
11	Strap, Ground, EPM	0J198	F748092-1		2	PAOZZ

AB–6.15 REMOVE/REPLACE DISPLAY TOP PLATE

Refer to Figure AB-9.

AB–6.15.1 REMOVE DISPLAY TOP PLATE

WARNING

Before conducting maintenance involving the removal or replacement of system components, ensure that all power to the FBCB2 system is off (including power from the vehicle). Failure to comply with warning may result in equipment damage or injury to personnel.

a. Power down all interface equipment and the AN/UYK-128(V) IAW the Operator's Manual TM 11-7010-326-10, or Pocket Guide TB 11-7010-326-10.

b. Remove DU IAW Unit Maintenance Manual, TM 11-7010-326-20&P, Chapter 2.

c. Remove four countersunk flat head screws (2), spacers (3), and self-locking wing nuts (4) using a No. 3 cross-tip screwdriver from the display top plate and the RAM-Ball display base.

d. Remove display top plate (1) from RAM-Ball display base with ball.

AB–6.15.2 REPLACE DISPLAY TOP PLATE

a. Align four holes in display top plate (1) with installation holes in RAM-Ball display base.

b. Install four flat head screws (2), spacers (3), and self-locking wing nuts (4) using a No. 3 cross-tip screwdriver.

c. Replace DU IAW Unit Maintenance Manual, TM 11-7010-326-20&P, Chapter 2.

CAUTION

Before powering up system, make sure all devices are properly grounded to grounding lug on SICPS TENT system and that SICPS TENT system is properly grounded to an auxiliary main line. Failure to comply can cause equipment damage.

NOTE

Three ground straps must be fastened to the SICPS TENT equipment rack ground terminal: One each for the PU, DU, and External Power Module. The PLGR unit also must be grounded to the metal mounting plate.

NOTE

Ensure W2 display cable and display ground strap allow enough freedom of movement for display to rotate 180 degrees for stowage.

d. Perform Functional Check IAW paragraph AB–6.1.

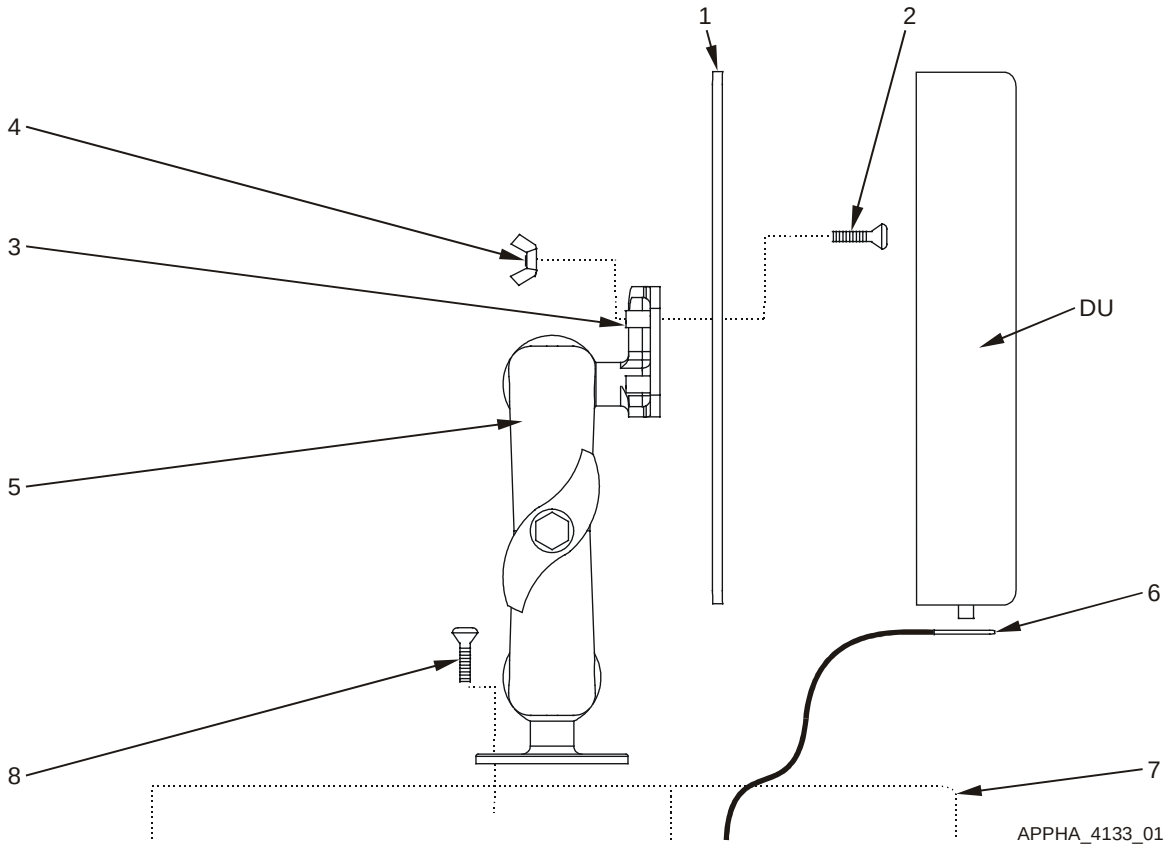

Figure AB-9. Remove and Replace Display Top Plate and RAM-Ball Assembly

Key and Parts List for Figure AB-9

ITEM NO.	NOMENCLATURE	CAGE CODE	PART NUMBER	NSN	QTY	SMR
1	Plate, Display Top	0J198	881272-1		1	XBODD
2	Screw, Flat Head	96906	MS35190-292		4	PAOZZ
3	Spacer, Aluminum	57177	10705AL315C		4	PAOZZ
4	Nut, Self-Locking, Wing	96906	MS51553-420	5310-01-384-2546	4	PAOZZ
5	Mount, RAM-Ball	0J198	889489-1		1	PAOZZ
6	Strap, DU Ground, 36"	0J198	F748092-6		1	PAOZZ
7	Rack, Electrical Equip	0J198	881287-1		1	XBOZZ
8	Screw, Flat Head	80205	MS35190-289	5305-00-958-5246	3	PAOZZ
--	Assembly, DU Lock	0J198	872843-1		1	XBOOO
--	Bracket, Locking	0J198	861871-3		1	XBOZZ
--	Screw	80205	MS35190-253	5305-00-059-4568	2	PAOZZ
--	Washer, Lock	96906	MS35338-42	5310-00-045-3299	2	PAOZZ

AB–6.16 REMOVE/REPLACE RAM-BALL ASSEMBLY

Refer to Figure AB-9.

AB–6.16.1 REMOVE RAM-BALL ASSEMBLY

WARNING

Before conducting maintenance involving the removal or replacement of system components, ensure that all power to the FBCB2 system is off (including power from the vehicle). Failure to comply with warning may result in equipment damage or injury to personnel.

a. Power down all interface equipment and the AN/UYK-128(V) IAW the Operator's Manual TM 11-7010-326-10, or Pocket Guide TB 11-7010-326-10.

b. Remove DU IAW Unit Maintenance Manual, TM 11-7010-326-20&P, Chapter 2.

c. Loosen RAM-Ball knob until RAM-Ball display base with ball and display top plate can be lifted out of RAM-Ball socket.

d. Squeeze upper part of RAM-Ball socket and remove socket from RAM-Ball mounting base with ball.

e. Remove three countersunk flat head screws (8) from RAM-Ball mounting base with ball and SICPS TENT equipment rack using a No. 3 cross-tip screwdriver.

f. Remove RAM-Ball mounting base with ball from SICPS TENT equipment rack.

g. Remove four countersunk flat head screws (2), spacers (3), and self-locking wing nuts (4) using a No. 3 cross-tip screwdriver from the display top plate and the RAM-Ball display base.

h. Remove RAM-Ball display base with ball from display top plate (1).

AB–6.16.2 REPLACE RAM-BALL ASSEMBLY

a. Align three holes in RAM-Ball mounting base with ball with holes in SICPS TENT equipment rack.

b. Install three flat head screws (8) in RAM-Ball mounting base with ball using a No. 3 cross-tip screwdriver.

c. Align four holes in RAM-Ball display base with ball with installation holes in display top plate (1).

d. Secure RAM-Ball display base with ball to display top plate with four flat head screws (2), spacers (3), and self-locking wing nuts (4) using a No. 3 cross-tip screwdriver.

CAUTION

Ensure RAM Ball is free of dirt and contaminants before reassembling. Failure to comply can result in slippage or excess wear of RAM Ball assembly.

e. Insert RAM-Ball socket on RAM-Ball mounting base with ball and position upright.

f. Insert RAM-Ball display base with ball and display top plate into RAM-Ball socket.

g. Adjust viewing angle and tighten ram ball knob.

h. Install DU IAW Unit Maintenance Manual, TM 11-7010-326-20&P, Chapter 2.

NOTE

Ensure W2 display cable and display ground strap allow enough freedom of movement for display to rotate 180 degrees for stowage.

i. Perform Functional Check IAW paragraph AB–6.1.

AB–6.17 REMOVE/REPLACE KEYBOARD UNIT (KU)

Refer to Figure AB-10.

AB–6.17.1 REMOVE KEYBOARD UNIT (KU)

WARNING

Before conducting maintenance involving the removal or replacement of system components, ensure that all power to the FBCB2 system is off (including power from the vehicle). Failure to comply with warning may result in equipment damage or injury to personnel.

NOTE

If keyboard drawer is damaged, return SICPS TENT unit for Depot repair.

a. Power down all interface equipment and the AN/UYK-128(V) IAW the Operator's Manual TM 11-7010-326-10, or Pocket Guide TB 11-7010-326-10.

b. Turn keyboard drawer wing handle latch counter clockwise ¼ turn. Inward pressure on the drawer may be required to unlatch the pawl.

c. Pull keyboard drawer (1) outward until fully open and spring latches engage.

d. Loosen thumbscrew inside of drawer on left side of tray cover to remove keyboard from drawer and raise tray cover.

e. Slide keyboard toward tray and raise bottom edge to lift keyboard out of drawer.

f. Close tray cover.

g. Access KU cable connector behind SICPS TENT equipment rack bulkhead in back of and below GFCI receptacle.

h. Disconnect KU cable from back of keyboard bulkhead connector.

i. Feed KU cable and connector through cutout in back of drawer.

j. Remove keyboard and attached cable.

AB–6.17.2 REPLACE KEYBOARD UNIT (KU)

a. Place KU on drawer tray and route connector and cable through cutout in back of drawer.

b. Route KU connector and cable under SICPS TENT equipment rack to keyboard bulkhead connector behind and below GFCI receptacle.

c. Connect KU cable to back of keyboard bulkhead connector.

d. Position keyboard for use in any of the following positions:

   1) Flat on top of tray
   2) At an angle with KU grip placed over the two cap nuts at front edge of SICPS TENT equipment rack.
   3) Balanced on operator's lap.

e. Perform Functional Check IAW paragraph AB–6.1.

f. Loosen thumbscrew and raise tray cover to stow keyboard unit in drawer.

g. Place KU grip snuggly in slot at back of drawer and lay KU flat in front of tray. KU must be fully to back of drawer to close tray cover.

h. Ensure KU cable is fed through opening at back of drawer properly to prevent pinching, cutting, or damage to cable when drawer is closed.

i. Close tray cover and tighten thumbscrew.

j. Press in drawer locking spring latches on drawer side rails and slide drawer closed.

k. Turn wing handle latch ¼ turn clockwise until pawl is latched closed to secure keyboard drawer. Inward pressure may be required to right side of drawer to engage pawl.

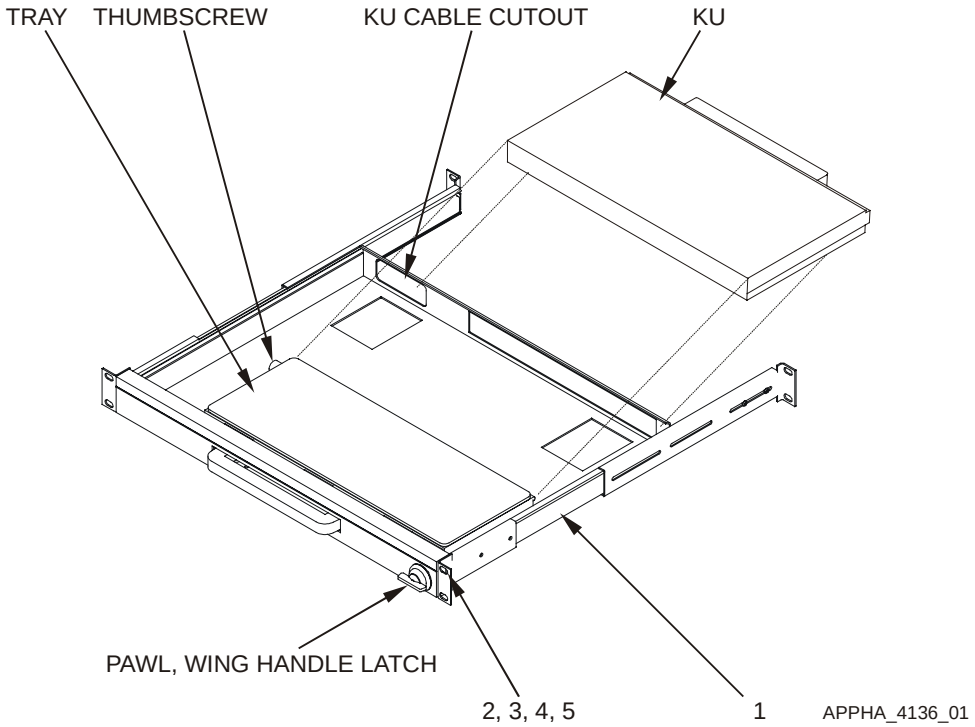

Figure AB-10. Remove and Replace Keyboard Unit

Key and Parts List for Figure AB-10

ITEM NO.	NOMENCLATURE	CAGE CODE	PART NUMBER	NSN	QTY	SMR
1	Drawer, Electrical Equip	0J198	881332-1		1	PAOZZ
--	Nut, Self-Locking Cap	39428	90507A230		2	PAOZZ
--	Washer, Flat	96906	MS27183-10	5310-00-809-4058	4	PAOZZ
--	Washer, Lock	96906	MS35338-44	5310-00-582-5965	2	PAOZZ
--	Screw, Cap, Hexagon	80204	B1821AH025C050N		2	PAOZZ
2	Screw, Machine	96906	MS35207-263	5305-00-989-7434	8	PAOZZ
3	Washer, Flat	96906	MS27183-8	5310-00-809-8546	8	PAOZZ
4	Washer, Lock	96906	MS35338-43	5310-00-045-3296	8	PAOZZ
5	Nut, Plain, Hexagon	96906	MS35650-302	5310-00-934-9751	8	PAOZZ
--	Grip, Handle Assembly	0J198	861867-1		1	XBOOO
--	Screw, Machine	96906	MS35206-228	5305-00-984-4988	4	PAOZZ
--	Grip, Handle	0J198	861869-1		1	XBOZZ
--	Washer, Lock	96906	MS35338-41	5310-00-045-4007	4	PAOZZ
--	Tape, Shielding, Elect	39428	7648A34		1	XBOZZ

AB–6.18 REMOVE/REPLACE GFE PLGR BRACKET

Refer to Figure AB-11.

AB–6.18.1 REMOVE GFE PLGR BRACKET

WARNING

Before conducting maintenance involving the removal or replacement of system components, ensure that all power to the FBCB2 system is off (including power from the vehicle). Failure to comply with warning may result in equipment damage or injury to personnel.

a. Power down all interface equipment and the AN/UYK-128(V) IAW the Operator's Manual TM 11-7010-326-10, or Pocket Guide TB 11-7010-326-10.

b. Disconnect W1E-P2 PLGR power cable connector from PLGR J4 connector.

c. Install protective cap on PLGR J4 connector.

d. Disconnect quick-disconnects from PLGR and mounting plate ground straps.

e. Unfasten over-center latch and remove PLGR from mounting bracket.

f. Disconnect W3P-P2 PLGR cable connector from PLGR J2 connector using an offset flat-tip screwdriver.

g. Loosen thumbscrew and remove PLGR remote RF antenna cable from PLGR J1 antenna jack.

h. Remove four pan head screws (3) from PLGR mounting bracket (2) and equipment rack PLGR mounting plate using a No. 2 cross-tip screwdriver.

i. Remove PLGR mounting bracket (2) from plate.

AB–6.18.2 REPLACE GFE PLGR BRACKET

a. Align holes in GFE PLGR mounting bracket with holes in PLGR mounting plate on SICPS TENT equipment rack.

b. Install pan head screws (3) using a No. 2 cross-tip screwdriver to secure PLGR mounting bracket to plate.

c. Connect PLGR remote RF antenna cable to PLGR J1 antenna jack and tighten thumbscrew.

d. Connect W3P-P2 PLGR cable connector to PLGR J2 connector using an offset flat-tip screwdriver.

e. Install PLGR in GFE mounting bracket and fasten over-center latch.

f. Connect PLGR and mounting bracket ground strap quick-disconnects.

g. Remove protective connector cover from PLGR J4 connector.

h. Connect W1E-P2 PLGR power cable connector to PLGR J4 connector.

i. Perform Functional Check IAW paragraph AB–6.1

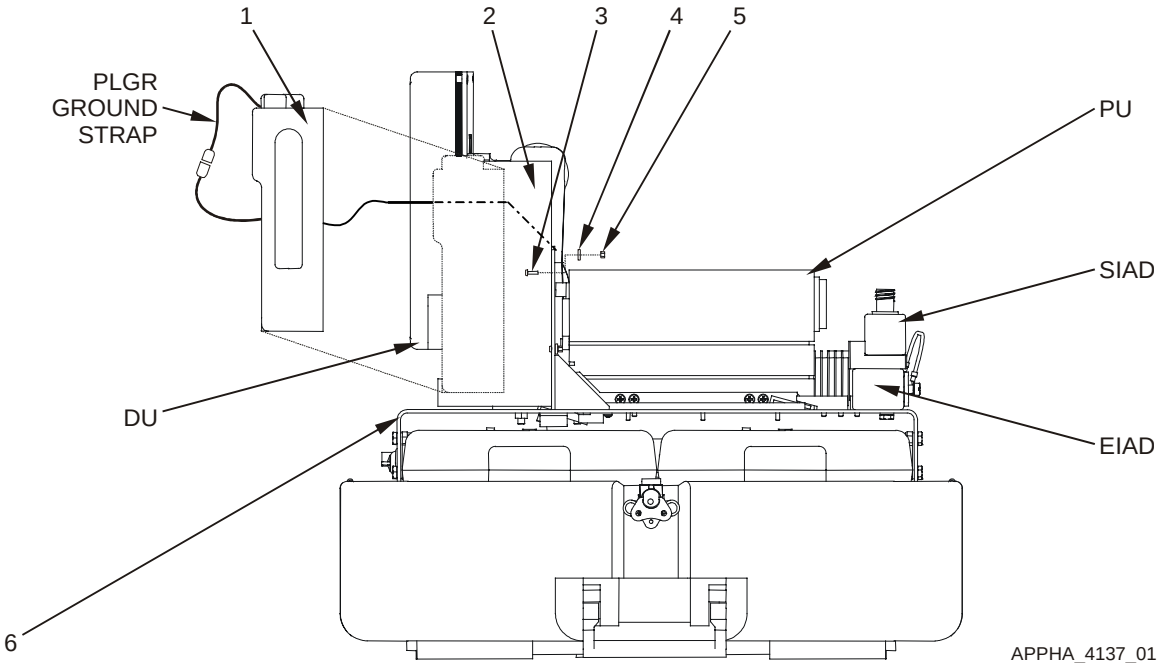

Figure AB-11. Remove and Replace GFE PLGR Bracket

Key and Parts List for Figure AB-11

ITEM NO.	NOMENCLATURE	CAGE CODE	PART NUMBER	NSN	QTY	SMR
1	PLGR	GFE			1	
2	Bracket, PLGR Mounting	GFE			1	
3	Screw, Machine	96906	MS35207-263	5305-00-989-7434	5	PAOZZ
4	Washer, Lock	96906	MS35338-43	5310-00-045-3296	1	PAOZZ
5	Nut, Plain, Hexagon	96906	MS35650-302	5310-00-934-9751	1	PAOZZ
6	Rack, Electrical Equip	0J198	881287-1		1	XBOZZ
--	Ground Strap, QD	GFE			2	

This page intentionally left blank.

APPENDIX AC

SUPPLEMENTARY INFORMATION FOR

FMTV, 2 1/2 TON TRUCK

TABLE OF CONTENTS

		Page
AC–1	GENERAL	AC–3
AC–2	COMPONENT ITEM NUMBERS AND PART NUMBERS	AC–3
AC–3	SYSTEM INTERFACES	AC–3
AC–3.1	MECHANICAL	AC–3
AC–3.2	CABLE INTERFACES	AC–4
AC–4	COMPONENT LOCATION	AC–6
AC–4.1	GENERAL LOCATION	AC–6
AC–4.2	MOUNTING	AC–6
AC–5	PLATFORM-UNIQUE TROUBLESHOOTING	AC–8
AC–6	REMOVAL/REPLACEMENT IN THE PLATFORM	AC–8
AC–6.1	FUNCTIONAL CHECK	AC–8
AC–6.2	REMOVE/REPLACE W1 POWER CABLE	AC–9
AC–6.3	REMOVE/REPLACE W2 DISPLAY CABLE	AC–10
AC–6.4	REMOVE/REPLACE W3 SERIAL INTERFACE ADAPTER DEVICE (SIAD)	AC–11
AC–6.5	REMOVE/REPLACE W3P PLGR CABLE	AC–12
AC–6.6	REMOVE/REPLACE W3N INC CABLE	AC–13
AC–6.7	REMOVE/REPLACE W6 CABLE	AC–14
AC–6.8	REMOVE/REPLACE PU ISOLATION ASSEMBLY	AC–17
AC–6.9	REMOVE/REPLACE DU ISOLATION ASSEMBLY	AC–20
AC–6.10	REMOVE/REPLACE RAM-BALL ASSEMBLY	AC–24
AC–6.11	REMOVE/REPLACE KEYBOARD UNIT (KU) STOWAGE BOX	AC–27
AC–6.12	REMOVE/REPLACE KEYBOARD UNIT (KU) STOWAGE BOX DOOR LATCHES	AC–30

LIST OF ILLUSTRATIONS

Page
Figure AC–1. Equipment Interface Block Diagram AC–5
Figure AC–2. Relative Component Locations AC–7
Figure AC–3. Cable Run - Curbside AC–15
Figure AC–4. Remove and Replace PU Isolation Assembly AC–19
Figure AC–5. Remove and Replace DU Isolation Assembly and RAM-Ball Assembly AC–22
Figure AC–6. Remove and Replace Keyboard Unit (KU) Stowage Box AC–28
Figure AC–7. Remove and Replace Keyboard Unit (KU) Stowage Box Door Latches AC–30

AC–1 GENERAL

This appendix describes the interfaces between the FBCB2 equipment and the Family of Medium Tactical Vehicles (FMTV), 2 1/2 Ton Truck. This appendix also identifies the component parts of the FMTV platform installation kit and details the removal and replacement procedures particular to the FMTV, 2 1/2 Ton Truck.

AC–2 COMPONENT ITEM NUMBERS AND PART NUMBERS

Key and Parts List tables contained in the Removal and Replacement section of this Appendix serve a dual purpose. Use the Item Numbers in the Key to identify components and attaching hardware shown in the Figures illustrating the tasks. The nomenclature and part number for the hardware and equipment mounting components of the installation kit also are keyed to the Item Numbers in the tables. Additional parts ordering information, such as Contractor and Government Entity code (CAGE); National Stock Number (NSN); quantity; and Source, Maintenance and Recoverability (SMR) codes, are provided. The Key and Parts List tables follow the task illustrations.

AC–3 SYSTEM INTERFACES

AC–3.1 MECHANICAL

The mechanical hardware-to-hardware interfaces include:

a. Cables

b. Processor Unit (PU)

c. Display Unit (DU)

d. Keyboard Unit (KU)

AC–3.2 CABLE INTERFACES

Figure AC–1 illustrates a block diagram of the interface between FBCB2 equipment and the FMTV, 2 1/2 Ton Truck (Platform). Figure AC–1 also illustrates the signal and control interfaces along with the terminal connector labels (e.g., P1, P2). The purpose of each cable is listed below:

Cable Name	Purpose
W1–Cable	Supplies vehicle power (28 VDC) to the AN/UYK-128(V) computer and its subassemblies.
W2–Cable	Supplies power and signals to the Display Unit (DU) and Keyboard Unit (KU). Returns Man Machine Interface (MMI) information from the KU to the Processor Unit (PU).
W3–Cable	The Serial Interface Adapter Device (SIAD) is a conduit assembly that breaks out each of the serial interface ports to a connector.
W3P–Cable	Collects position and time information from the PLGR.
W3N–Cable	Provides duplex communication between the PU, Internet Controller (INC), and radios.
W5–Cable	The Expansion Interface Adapter Device (EIAD) is connected to the Universal Serial Bus (USB) connector only when this vehicle is to be used in a Tactical Operations Center (TOC) setup. When used in this configuration, the EIAD is connected between the PU J5 connector and local router.
W6–Cable	Connects the Display Unit, located on the cabin ceiling, to the inline connector on the electrical equipment rack. The Keyboard Unit, located in the Curbside Rack, input cable is connected to the other side of the inline connector.
Ground Strap	Provides safety ground for the PU.
Ground Strap	Provides safety ground for the DU.

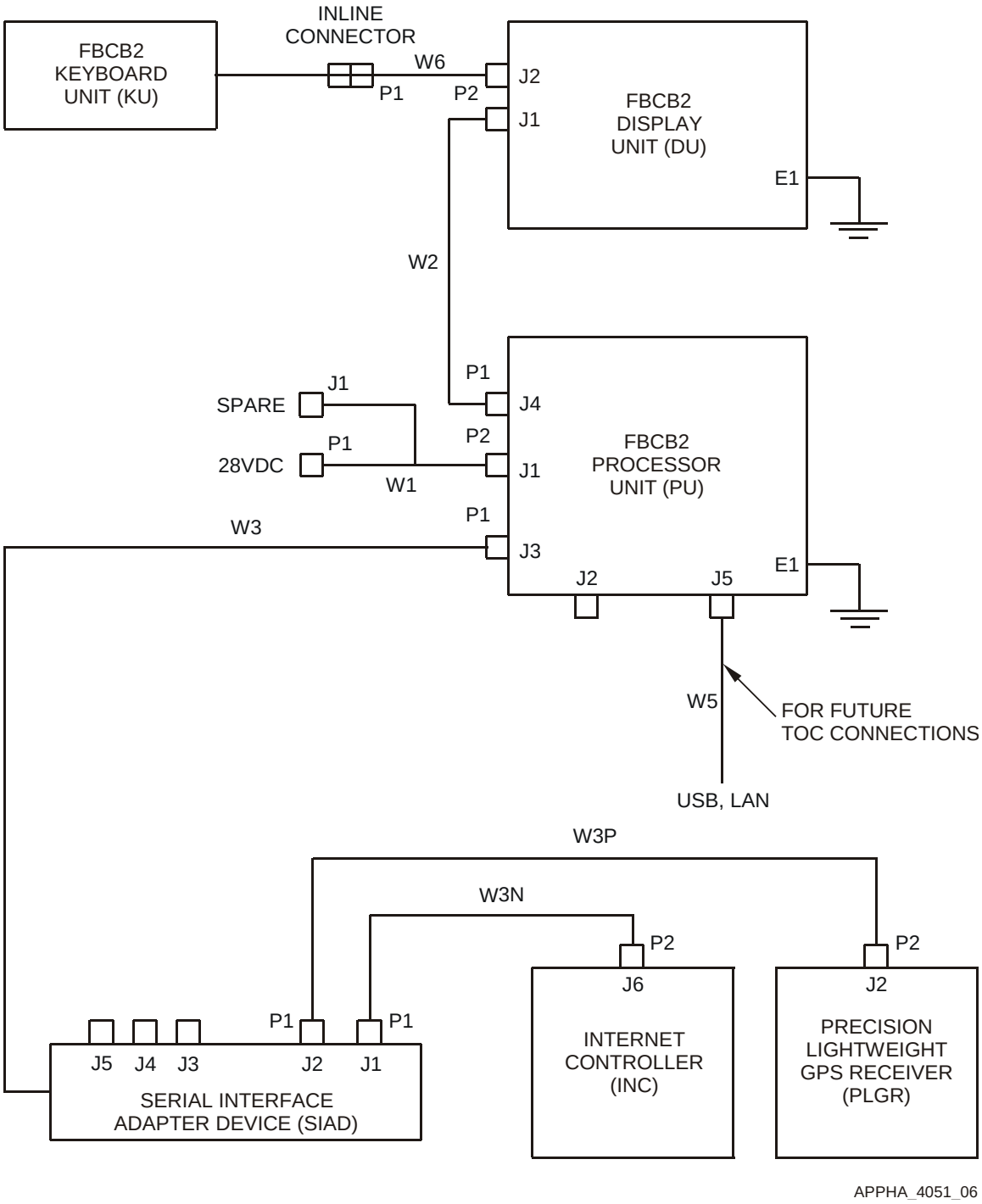

Figure AC–1. Equipment Interface Block Diagram

AC–4 COMPONENT LOCATION

AC–4.1 GENERAL LOCATION

Figure AC–2 shows the relative locations of the FBCB2 computer equipment and mounting components in the cab of the FMTV, 2 1/2 Ton Truck platform.

AC–4.2 MOUNTING

The PU is located on the lower shelf of the Rear-Curbside Communications Equipment Rack (CER) mounted behind the commander seat (see Figure AC–2). The DU is mounted to a RAM Ball which is attached to the ceiling in a location that is forward and center in the FMTV. The keyboard stowage box is mounted to the top of the PU. A notch in the stowage box allows the KU to remain connected to the DU when stowed.

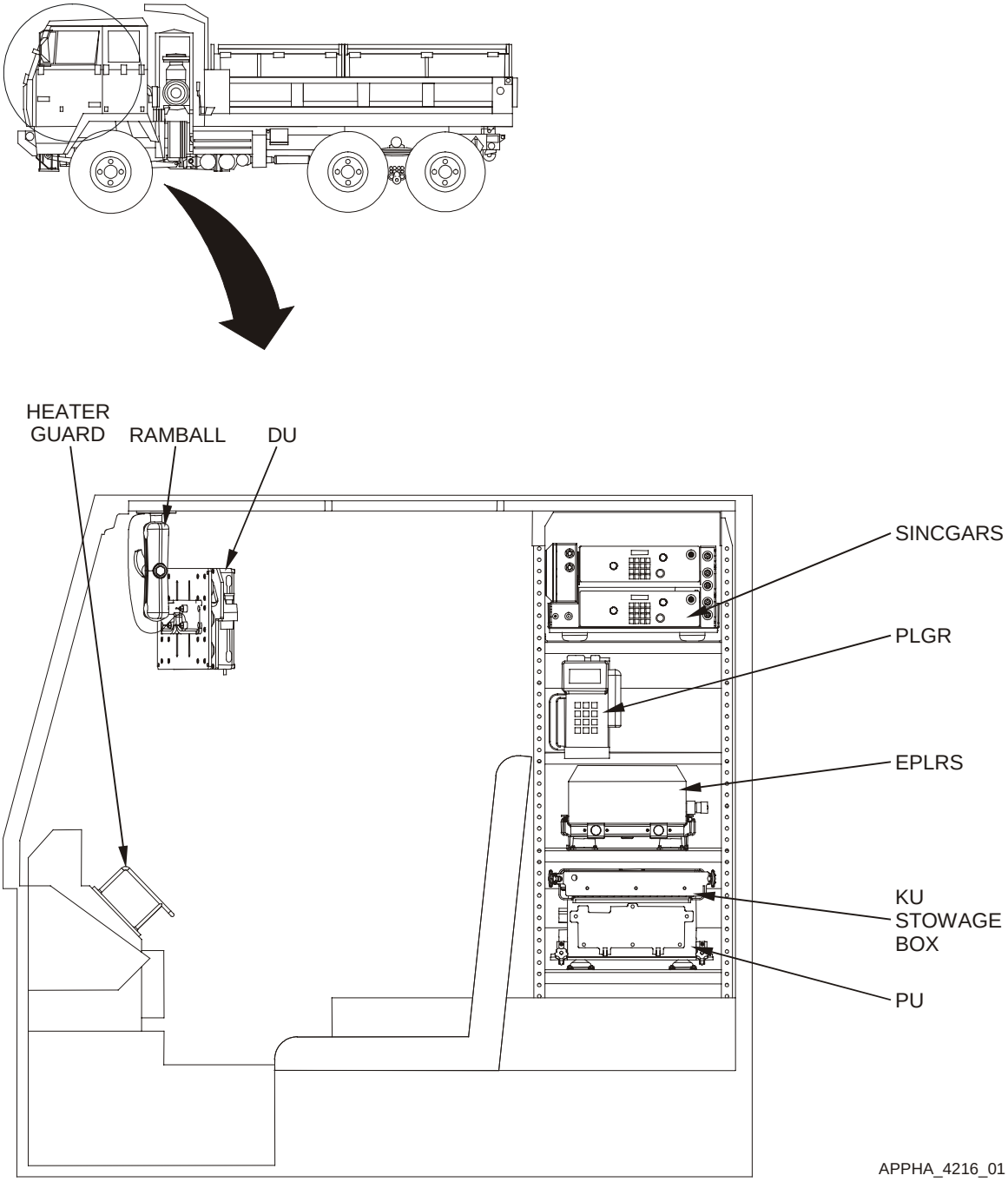

Figure AC–2. Relative Component Locations

AC–5 PLATFORM-UNIQUE TROUBLESHOOTING

There are no unique troubleshooting procedures for this vehicle.

AC–6 REMOVAL/REPLACEMENT IN THE PLATFORM

Most installations must be tailored to the platform. Cables and brackets are unique to the installation. Before a part or assembly is removed from a vehicle, fill out a “Maintenance Request” DA Form 2407. One copy of this completed form must remain with the vehicle and the remaining copies must be kept with the failed component. To prove the operability of the system after an item is replaced, perform the system Functional Check.

AC–6.1 FUNCTIONAL CHECK

AC – 6.1.1 POWER UP

Power up and initialize all interface equipment and the AN/UYK-128(V) In Accordance With (IAW) Operator’s Manual TM 11-7010-326-10, or Pocket Guide TB 11-7010-326-10.

AC – 6.1.2 VERIFICATION

NOTE

Observe that the Display Unit PWR, DISP and CPU green LED lights are lit.

a. Observe that the PLGR synchronizes with PU, indicated by the PLGR dialog box showing green.

b. Observe that the Router synchronizes with the PU, indicated by the Router dialog box showing green.

c. At the Session Manager screen, select OPS button to display the OPS screen.

d. Verify the GPS status is either green or amber on the Classification/Status Bar.

e. Verify the Communications status is either green or amber on the Classification/Status Bar.

AC – 6.1.3 POWER DOWN

Power down all interface equipment and the AN/UYK-128(V) IAW the Operator’s Manual TM 11-7010-326-10, or Pocket Guide TB 11-7010-326-10.

AC–6.2 REMOVE/REPLACE W1 POWER CABLE

Refer to Figure AC–3.

AC–6.2.1 REMOVE W1 POWER CABLE

WARNING

Before conducting maintenance involving the removal and replacement of system components, ensure that all power to the FBCB2 system is off (including power from the vehicle). Failure to comply with warning may result in equipment damage or injury to personnel.

a. Power down AN/UYK-128(V) system IAW Operator's Manual TM 11-7010-326-10, or Pocket Guide TB 11-7010-326-10.

b. Power down SINCGARS IAW TM 11-5820-890-10-8.

c. Loosen wing bolts securing the VAA/INC.

d. Slide the VAA/INC out to permit access to the connector J2.

e. Disconnect W1-P1 cable connector from the SINCGARS Mounting Base (MB) (MT-6352/VRC) A4-J2 connector.

f. Disconnect W1-P2 cable connector from PU J1 connector.

g. Install protective cap on PU J1 connector.

NOTE

Note cable routing and tie-wrap locations before removing cable or tie-wraps.

h. Remove tie-wraps securing W1 cable using diagonal wire cutters.

i. Remove W1 power cable (2).

AC–6.2.2 REPLACE W1 POWER CABLE

a. Obtain replacement W1 Power Cable.

b. Route W1 power cable (2).

c. Remove protective cap from PU J1 connector.

d. Connect W1-P2 cable connector to PU J1 connector.

e. Connect W1-P1 cable connector to SINCGARS Mounting Base (MB) (MT-6352A/VRC) A4-J2 connector.

f. Slide the VAA/INC in to rack.

g. Tighten wing bolts securing the VAA/INC.

h. Secure W1 cable using tie-wraps, as applicable.

i. Dress tie-wraps using diagonal wire cutters.

j. Perform Functional Check IAW paragraph AC–6.1

AC–6.3 REMOVE/REPLACE W2 DISPLAY CABLE

Refer to Figure AC–3.

AC–6.3.1 REMOVE W2 DISPLAY CABLE

WARNING

Before conducting maintenance involving the removal and replacement of system components, ensure that all power to the FBCB2 system is off (including power from the vehicle). Failure to comply with warning may result in equipment damage or injury to personnel.

a. Power down AN/UYK-128(V) system IAW Operator's Manual TM 11-7010-326-10, or Pocket Guide TB 11-7010-326-10.

b. Disconnect W2-P1 cable connector from PU J4 connector.

c. Install protective cap on PU J4 connector.

d. Disconnect W2-P2 cable connector from display J1 connector.

e. Install protective cap on display J1 connector.

NOTE

Note cable routing and tie-wrap locations before removing cable or tie-wraps.

NOTE

Ground strap may be wound around the W2 cable. It may be necessary to remove the ground strap from the DU ground stud and unwind before removing the W2 cable.

f. Remove tie-wraps from W2 cable and ground strap using diagonal wire cutters.

g. Remove W2 display cable (1).

AC–6.3.2 REPLACE W2 DISPLAY CABLE

a. Obtain replacement W2 Display Cable.

b. Route W2 display cable (1).

c. Remove protective cap from display J1 connector.

d. Connect W2-P2 cable connector to display J1 connector.

e. Remove protective cap from PU J4 connector.

f. Connect W2-P1 cable connector to PU J4 connector.

NOTE

To take up slack, the ground strap may be wound around the W2 cable before connecting it to the DU ground stud.

g. Secure W2 cable and ground strap using tie-wraps.

h. Dress tie-wraps using diagonal wire cutters.

i. Perform Functional Check IAW paragraph AC–6.1.

AC–6.4 REMOVE/REPLACE W3 SERIAL INTERFACE ADAPTER DEVICE (SIAD)

Refer to Figure AC–3.

AC–6.4.1 REMOVE W3 SERIAL INTERFACE ADAPTER DEVICE (SIAD)

WARNING

Before conducting maintenance involving the removal and replacement of system components, ensure that all power to the FBCB2 system is off (including power from the vehicle). Failure to comply with warning may result in equipment damage or injury to personnel.

a. Power down AN/UYK-128(V) system IAW Operator's Manual TM 11-7010-326-10, or Pocket Guide TB 11-7010-326-10.

b. Disconnect W3 SIAD-P1 cable connector from PU J3 connector.

c. Remove tie-wraps securing W3 SIAD using diagonal wire cutters.

d. Slide W3 SIAD out of rack to permit access to the SIAD Junction Box.

e. Disconnect W3N-P1 INC cable connector from W3 SIAD J1 connector.

f. Disconnect W3P-P1 PLGR cable connector from W3 SIAD J2 connector.

g. Install protective cap on PU J3 connector.

NOTE

Note cable routing and tie-wrap locations before removing cable or tie-wraps.

h. Remove W3 SIAD (4).

AC–6.4.2 REPLACE W3 SERIAL INTERFACE ADAPTER DEVICE (SIAD)

a. Obtain replacement W3 cable.

b. Connect W3P-P1 PLGR cable connector to W3 SIAD J2 connector.

c. Connect W3N-P1 INC cable connector to W3 SIAD J1 connector.

d. Route W3 SIAD (4) into original position.

e. Remove protective cap from PU J3 connector.

f. Connect W3 SIAD-P1 cable connector to PU J3 connector.

g. Secure W3 SIAD using tie-wraps.

h. Dress tie-wraps using diagonal wire cutters.

i. Perform Functional Check IAW paragraph AC–6.1.

AC–6.5 REMOVE/REPLACE W3P PLGR CABLE

Refer to Figure AC–3.

AC–6.5.1 REMOVE W3P PLGR CABLE

WARNING

Before conducting maintenance involving the removal and replacement of system components, ensure that all power to FBCB2 system is off (including power from the vehicle). Failure to comply with warning may result in equipment damage or injury to personnel.

a. Power down AN/UYK-128(V) system IAW Operator's Manual TM 11-7010-326-10, or Pocket Guide TB 11-7010-326-10.

b. Slide W3 SIAD out of rack to permit access to the SIAD Junction Box.

c. Disconnect W3P-P1 cable connector from W3 SIAD J2 connector.

d. Disconnect Lock from PLGR over-center latch, if necessary.

e. Unfasten over-center latch and remove PLGR from mounting bracket.

f. Disconnect W3P-P2 cable connector from PLGR J2 connector using offset flat-tip screwdriver.

NOTE

Note cable routing and tie-wrap locations before removing cable or tie-wraps.

g. Remove tie-wraps securing W3P cable using diagonal wire cutters.

h. Remove W3P cable (5).

AC–6.5.2 REPLACE W3P PLGR CABLE

a. Obtain replacement W3P PLGR Cable.

b. Route W3P cable (5).

c. Connect W3P-P2 cable connector to PLGR J2 connector using offset flat-tip screwdriver.

d. Install PLGR in mounting bracket and fasten over-center latch.

e. Install Lock on the over-center latch, if necessary.

f. Connect W3P-P1 cable connector to W3 SIAD J2 connector.

g. Slide W3 SIAD into rack.

h. Secure W3P cable using tie-wraps.

i. Dress tie-wraps using diagonal wire cutters.

j. Perform Functional Check IAW paragraph AC–6.1.

AC–6.6 REMOVE/REPLACE W3N INC CABLE

Refer to Figure AC–3.

AC–6.6.1 REMOVE W3N INC CABLE

WARNING

Before conducting maintenance involving the removal and replacement of system components, ensure that all power to the FBCB2 system is off (including power from the vehicle). Failure to comply with warning may result in equipment damage or injury to personnel.

a. Power down AN/UYK-128(V) system IAW Operator's Manual TM 11-7010-326-10, or Pocket Guide TB 11-7010-326-10.

b. Slide W3 SIAD out of rack to permit access to the SIAD Junction Box.

c. Disconnect W3N-P1 cable connector from W3 SIAD J1 connector.

d. Disconnect W3N-P2 cable connector from SINCGARS INC A2-J6 connector.

NOTE

Note cable routing and tie-wrap locations before removing cable or tie-wraps.

e. Remove tie-wraps securing W3N cable using diagonal cutters.

f. Remove W3N cable (3).

AC–6.6.2 REPLACE W3N INC CABLE

a. Obtain replacement W3N INC Cable.

b. Route W3N cable (3).

c. Connect W3N-P2 cable connector to SINCGARS INC A2-J6 connector.

d. Connect W3N-P1 cable connector to W3 SIAD J1 connector.

e. Slide W3 SIAD into rack.

f. Secure W3N cable using tie-wraps.

g. Dress tie-wraps using diagonal wire cutters.

h. Perform Functional Check IAW paragraph AC–6.1.

AC–6.7 REMOVE/REPLACE W6 CABLE

Refer to Figure AC–3.

AC–6.7.1 REMOVE W6 CABLE

WARNING

Before conducting maintenance involving the removal and replacement of system components, ensure that all power to the FBCB2 system is off (including power from the vehicle). Failure to comply with warning may result in equipment damage or injury to personnel.

a. Power down AN/UYK-128(V) system IAW Operator's Manual TM 11-7010-326-10, or Pocket Guide TB 11-7010-326-10.

b. Disconnect W6-P1 cable connector from DU J2 connector.

c. Disconnect W6-P2 cable connector from Keyboard Unit inline connector.

NOTE

Note cable routing and tie-wrap locations before removing cable or tie-wraps.

d. Remove tie-wraps securing W6 cable using diagonal cutters.

e. Remove W6 cable (6).

AC–6.7.2 REPLACE W6 CABLE

a. Obtain replacement W6 Cable.

b. Route W6 Cable (6).

c. Connect W6-P2 cable connector to Keyboard Unit inline connector.

d. Connect W6-P1 cable connector to DU J2 connector.

e. Secure W6 cable using tie-wraps.

f. Dress tie-wraps using diagonal wire cutters.

g. Perform Functional Check IAW paragraph AC–6.1.

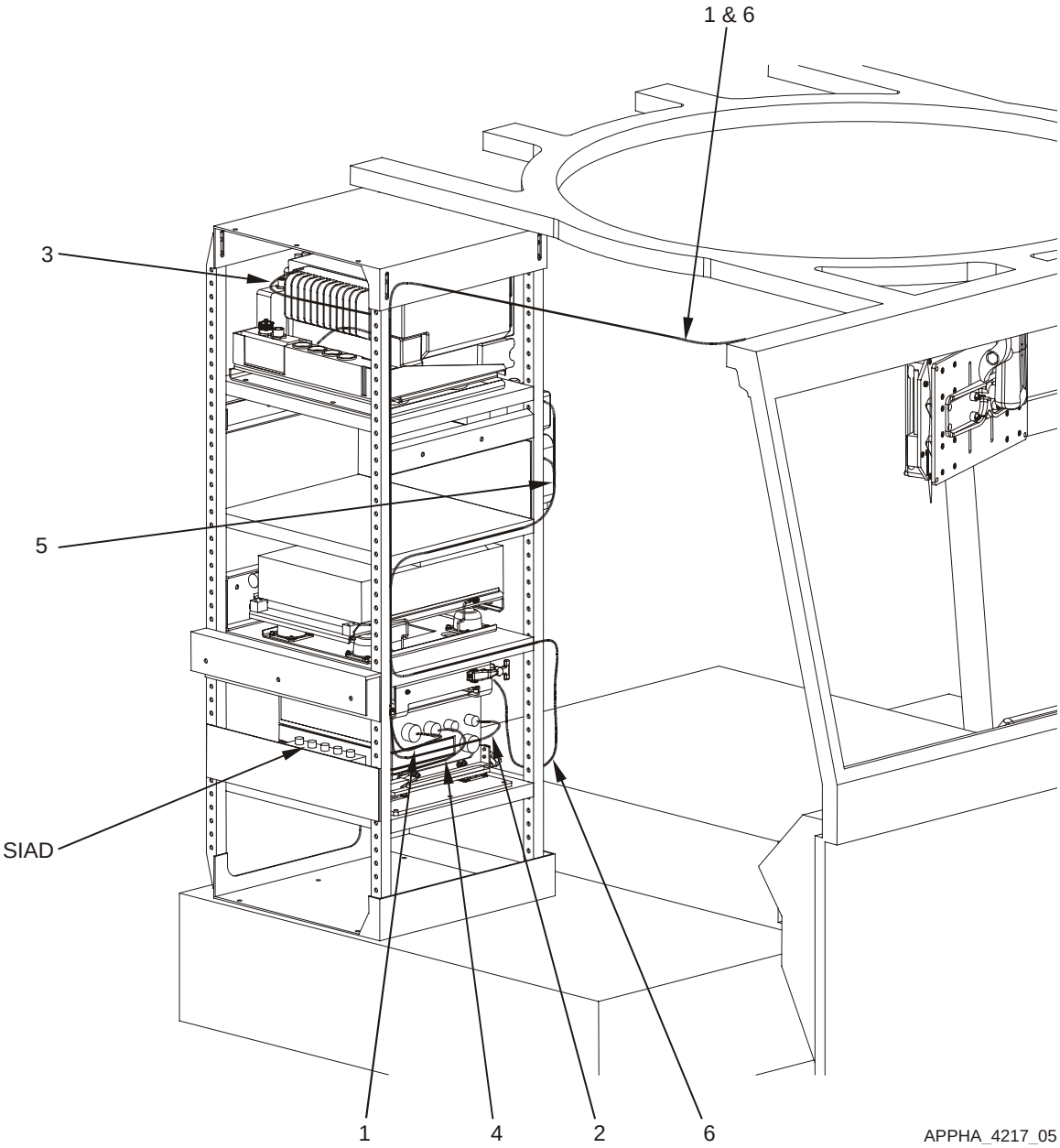

Figure AC–3. Cable Run - Curbside

Key and Parts List for Figure AC–3.

ITEM NO.	NOMENCLATURE	CAGE CODE	PART NUMBER	NSN	QTY	SMR
1	Cable Assembly W2	0J198	881327-4	5995-01-478-4880	1	PAOZZ
2	Cable Assembly W1	0J198	861880-6	5995-01-478-4952	1	PAOZZ
3	Cable Assembly W3N	0J198	881336-1	5995-01-478-4913	1	PAOZZ
4	Adapter Assy SIAD W3	0J198	881331-1	4920-01-478-3722	1	PAODD
5	Cable Assembly W3P	0J198	881335-1	5995-01-478-4891	1	PAOZZ
6	Cable Assembly W6	0J198	881289-2	5995-01-478-4921	1	PAODD
--	Strap, Tie Down, Elect	39428	7130K31		A/R	PAOZZ

AC–6.8 REMOVE/REPLACE PU ISOLATION ASSEMBLY

Refer to Figure AC–4.

NOTE

Ground straps are attached to components at one end (PU and DU) and a frame ground at the other end. Regardless of where the ground strap terminates, it is usually a burnished (void of paint) area. If the ground strap is removed from a burnished area, make sure to return it to the same burnished area. Where applicable, always connect the ground strap first when assembling, and disconnect the ground strap last when disassembling.

AC–6.8.1 REMOVE PU ISOLATION ASSEMBLY

WARNING

Before conducting maintenance involving the removal and replacement of system components, ensure that all power to the FBCB2 system is off (including power from the vehicle). Failure to comply with warning may result in equipment damage or injury to personnel.

a. Power down AN/UYK-128(V) system IAW Operator's Manual TM 11-7010-326-10, or Pocket Guide TB 11-7010-326-10.

NOTE

Do not remove the Removable Hard Disk Drive Cartridge (RHDDC), locking bracket, or keyboard stowage box from PU.

b. Remove PU IAW Unit Maintenance Manual TM 11-7010-326-20&P.

NOTE

Ground strap is connected from the Wing Nut on the PU to the PU Isolation Plate Mounting Bolt.

c. Remove four hex head screws (1), flat washers (2), lock washers (4), and hex nuts (5) from PU isolation assembly (1) bottom plate using a 7/16" open-end wrench and 7/16" socket with ratchet with 3 inch extension.

d. Remove PU isolation assembly (1) from Platform Equipment Rack.

AC–6.8.2 REPLACE PU ISOLATION ASSEMBLY

a. Align four holes in PU isolation assembly (1) bottom plate with Platform Equipment Rack mounting holes.

NOTE

To ensure positive ground, PU ground strap must make direct contact with bare metal. Ensure PU ground strap is installed in its original location at the PU isolation assembly bottom plate mounting hole. Slip the ground strap on the mounting screw and insert the screw before installing the flat washer and lock washer and tightening nut from underneath.

b. Install four hex head screws (1), flat washers (2), lock washers (4), and hex nuts (5) on PU isolation assembly (1) bottom plate using a 7/16” open-end wrench and 7/16” socket with ratchet with 3 inch extension.

c. Install PU IAW Unit Maintenance Manual TM 11-7010-326-20&P.

d. Perform Functional Check IAW paragraph AC–6.1.

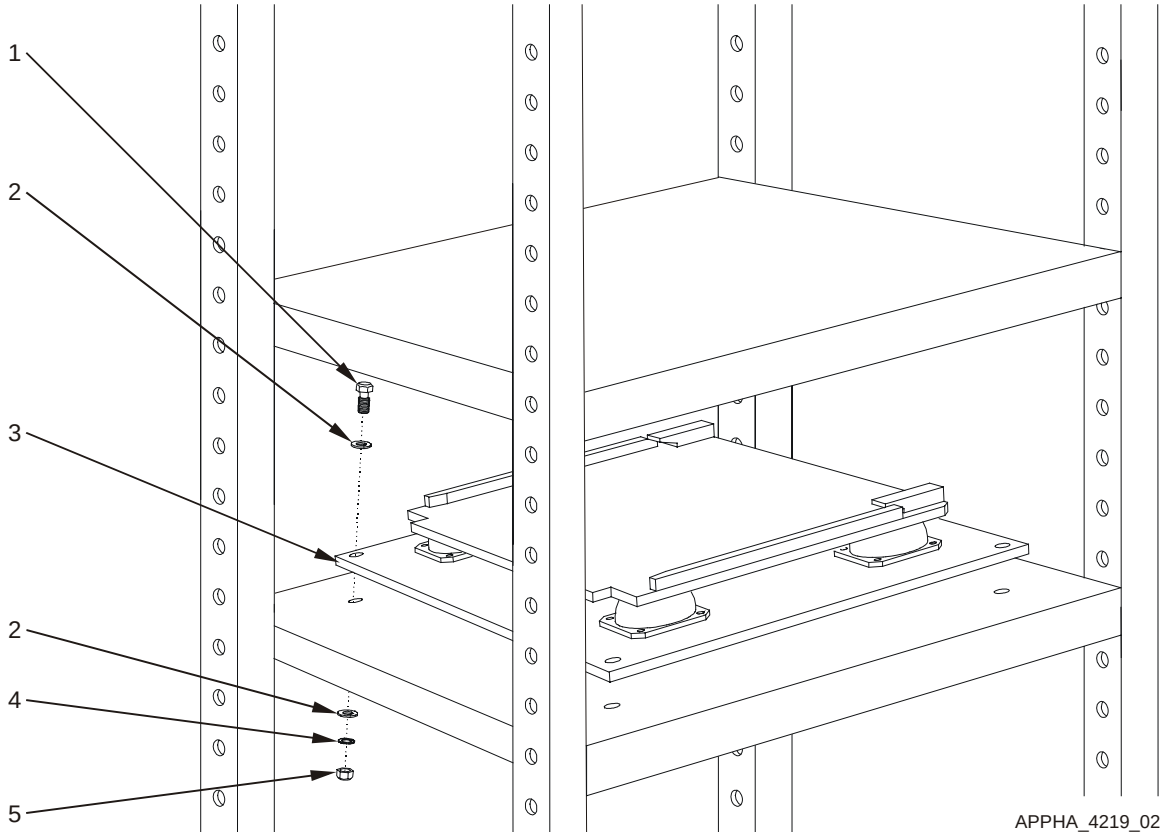

Figure AC–4. Remove and Replace PU Isolation Assembly

Key and Parts List for Figure AC–4

ITEM NO.	NOMENCLATURE	CAGE CODE	PART NUMBER	NSN	QTY	SMR
1	Screw, Cap, Hex Head	80204	B1821AH025C125N	5305-00-068-0509	4	PAOZZ
2	Washer, Flat	96906	MS27183-10	5310-00-809-4058	8	PAOZZ
3	(PU Isolation Assembly) Plate, Resilient Mount PU	0J198	872826-1	5340-01-481-5742	1	PAODD
4	Washer, Lock	96906	MS35338-44	5310-00-582-5965	4	PAOZZ
5	Nut, Plain, Hexagon	96906	MS35649-2252	5310-00-997-1888	4	PAOZZ
--	Assembly, PU Lock	0J198	861865-1	5340-01-G72-7627	1	XBOOO
--	Bracket, Locking	0J198	861871-1	5340-01-G72-7628	1	XBOZZ
--	Screw	80205	MS35190-253	5305-00-059-4568	2	PAOZZ

AC–6.9 REMOVE/REPLACE DU ISOLATION ASSEMBLY

Refer to Figure AC–5.

NOTE

Ground straps are attached to components at one end (PU and DU) and a frame ground at the other end. Regardless of where the ground strap terminates, it is usually a burnished (void of paint) area. If the ground strap is removed from a burnished area, make sure to return it to the same burnished area. Where applicable, always connect the ground strap first when assembling, and disconnect the ground strap last when disassembling.

AC–6.9.1 REMOVE DU ISOLATION ASSEMBLY

WARNING

Before conducting maintenance involving the removal and replacement of system components, ensure that all power to the FBCB2 system is off (including power from the vehicle). Failure to comply with warning may result in equipment damage or injury to personnel.

a. Power down AN/UYK-128(V) system IAW Operator's Manual TM 11-7010-326-10, or Pocket Guide TB 11-7010-326-10.

b. Remove DU IAW Unit Maintenance Manual TM 11-7010-326-20&P.

NOTE

Note cable routing and tie-wrap locations before removing cable or tie-wraps.

c. Remove tie-wraps securing W2 display cable, W6 Keyboard Unit extension cable, and ground strap to DU isolation assembly using diagonal wire cutters.

d. Remove one self-locking wing nut (8), safety lanyard (4), spacer (9) and square neck bolt (10) from RAM-Ball display base with ball and DU isolation assembly (1) bottom plate.

CAUTION

Ensure support is provided to display while loosening RAM-Ball knob. Failure to comply could result in display falling from RAM-Ball mount causing equipment damage.

e. Loosen RAM-Ball knob while supporting DU isolation assembly (1) until RAM-Ball display base with ball can be lifted free of RAM-Ball socket arm.

f. Remove remaining three self-locking wing nuts (8), spacers (9) and square neck bolts (10) from RAM-Ball display base with ball and DU isolation assembly (1) bottom plate.

g. Remove DU isolation assembly (1).

AC–6.9.2 REPLACE DU ISOLATION ASSEMBLY

a. Obtain replacement DU Isolation Assembly.

b. Align four holes in RAM-Ball display base with ball with slots in DU isolation assembly (1) bottom plate.

c. Install three square neck bolts (10), spacers (9), and self-locking wing nuts (8) in RAM-Ball display base with ball and DU isolation assembly (1) bottom plate.

CAUTION

Ensure RAM-Ball is free of dirt and contaminants before reassembling. Failure to comply can result in slippage or excess wear of RAM-Ball assembly.

d. Inspect and clean RAM-Ball socket arm and display base with ball, as necessary, using clean lint-free wipes.

e. Insert RAM-Ball display base with ball into RAM-Ball socket arm while supporting DU isolation assembly (1).

f. Adjust viewing angle and tighten RAM-Ball knob.

g. Install remaining square neck bolt (10), spacer (9), safety lanyard (4) and self-locking wing nut (8).

h. Secure W2 display cable, W6 Keyboard Unit extension cable, and ground strap to DU isolation assembly (1) bottom plate using tie-wraps.

i. Dress tie-wraps using diagonal wire cutters.

j. Install DU IAW Unit Maintenance Manual TM 11-7010-326-20&P.

k. Perform Functional Check IAW paragraph AC–6.1.

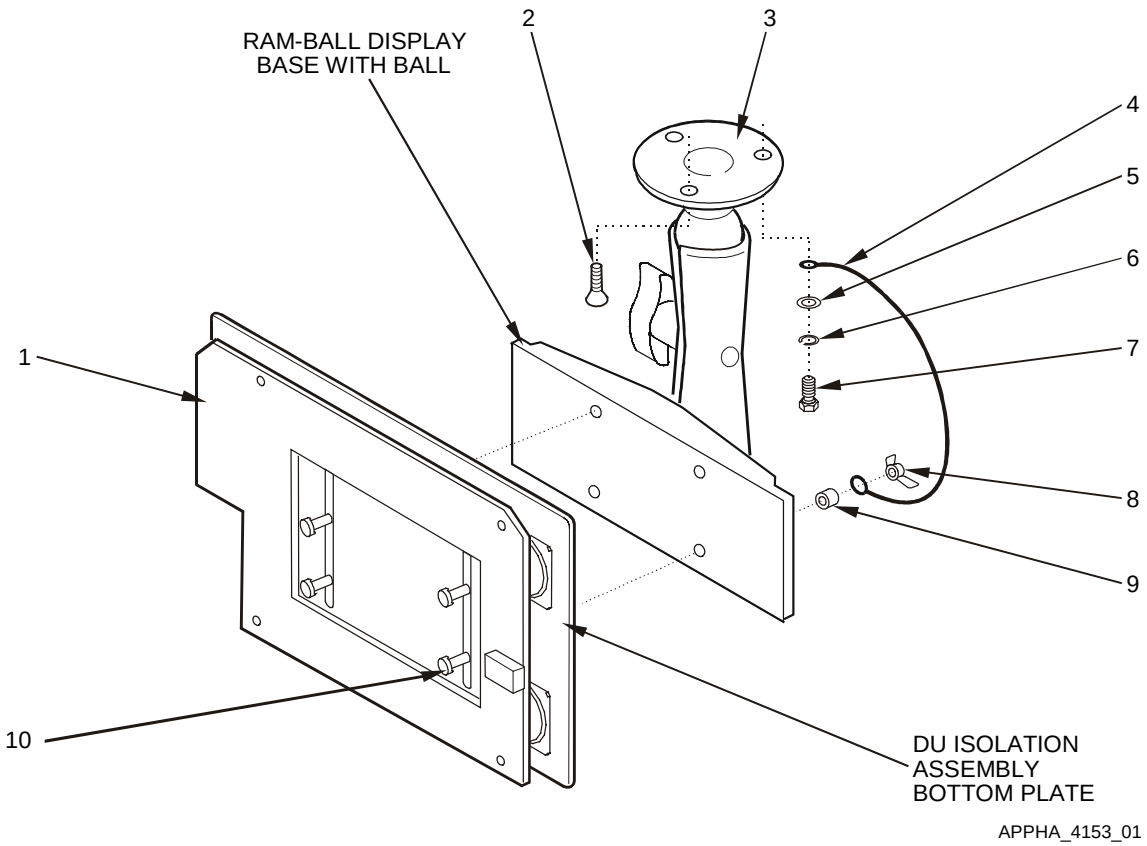

Figure AC–5. Remove and Replace DU Isolation Assembly and RAM-Ball Assembly

Key and Parts List for Figure AC–5.

ITEM NO.	NOMENCLATURE	CAGE CODE	PART NUMBER	NSN	QTY	SMR
1	(DU isolation assembly) Plate, Resilient Mount DU	0J198	872870	5340-01-481-5757	1	PAODD
2	Screw, Flathead	96906	MS35190-291	5306-00-042-6921	2	PAOZZ
3	RAM-Ball Mount	0J198	889489-1	5975-01-G72-7641	1	PAOZZ
4	(Safety Lanyard) Wire Rope Assembly	39428	30645T11	4010-01-G72-7647	1	PAOZZ
5	Washer, Flat	96906	MS27183-10	5310-00-809-4058	5	PAOZZ
6	Washer, Lock	96906	MS35338-44	5310-00-582-5965	5	PAOZZ
7	Screw, Cap, Hexagon	80204	B1821AH025C075N	5305-01-389-8000	5	PAOZZ
8	Nut, Self-Locking, Wing	96906	MS51553-420	5310-01-384-2546	4	PAOZZ
9	Spacer, Aluminum	57177	10705AL315C	5306-01-G72-7642	4	PAOZZ
10	Bolt, Square Neck	96906	MS35751-17	5306-00-889-2943	4	PAOZZ
--	Assembly, Lock DU	0J198	872843-1	5340-01-G72-7629	1	XBOOO
--	Bracket, Locking	0J198	861871-3	5340-01-G72-7630	1	XBOZZ
--	Washer, Lock	96906	MS35338-42	5310-00-045-3299	2	PAOZZ
--	Screw	80205	MS35190-253	5305-00-059-4568	2	PAOZZ

AC–6.10 REMOVE/REPLACE RAM-BALL ASSEMBLY

Refer to Figure AC–5.

NOTE

Ground straps are attached to components at one end (PU and DU) and a frame ground at the other end. Regardless of where the ground strap terminates, it is usually a burnished (void of paint) area. If the ground strap is removed from a burnished area, make sure to return it to the same burnished area. Where applicable, always connect the ground strap first when assembling, and disconnect the ground strap last when disassembling.

AC–6.10.1 REMOVE RAM-BALL ASSEMBLY

WARNING

Before conducting maintenance involving the removal and replacement of system components, ensure that all power to the FBCB2 system is off (including power from the vehicle). Failure to comply with warning may result in equipment damage or injury to personnel.

a. Power down AN/UYK-128(V) system IAW Operator's Manual TM 11-7010-326-10, or Pocket Guide TB 11-7010-326-10.

b. Remove DU IAW Unit Maintenance Manual TM 11-7010-326-20&P.

NOTE

Note cable routing and tie-wrap locations before removing cable or tie-wraps.

c. Remove tie-wraps securing W2 display cable, W6 Keyboard Unit extension cable, and ground strap to DU isolation assembly using diagonal wire cutters.

d. Remove one self-locking wing nut (8), safety lanyard (4), spacer (9) and square neck bolt (10) from RAM-Ball display base with ball and DU isolation assembly (1) bottom plate.

CAUTION

Ensure support is provided to display while loosening RAM-Ball knob. Failure to comply could result in display falling from RAM-Ball mount causing equipment damage.

e. Loosen RAM-Ball knob while supporting DU isolation assembly (1) until RAM-Ball display base with ball can be lifted free of RAM-Ball socket arm.

f. Remove remaining three self-locking wing nuts (8), spacers (9) and square neck bolts (10) from RAM-Ball display base with ball and DU isolation assembly (1) bottom plate.

g. Remove DU isolation assembly (1).

h. Remove one Hexagon Cap Screw (7), lock washer (6), flat washer (5) and safety lanyard (4), and from RAM-Ball mounting base using a 7/16" open-end wrench.

AC–6.10.1 REMOVE RAM-BALL ASSEMBLY (Continued)

CAUTION

Ensure support is provided to display while loosening RAM-Ball knob. Failure to comply could result in display falling from RAM-Ball mount causing equipment damage.

i. Remove two flat head screws (2) from the RAM-Ball mounting base using a No. 3 cross-tip screwdriver.

j. Remove RAM-Ball mounting base from the ceiling mounting plate.

AC–6.10.2 REPLACE RAM-BALL ASSEMBLY

a. Obtain replacement RAM-Ball Assembly.

b. Loosen RAM-Ball knob until RAM-Ball display base with ball can be lifted free of RAM-Ball socket arm.

c. Align four holes in RAM-Ball display base with ball with slots in DU isolation assembly (1) bottom plate.

d. Install three square neck bolts (10), spacers (9), and self-locking wing nuts (8) in RAM-Ball display base with ball and DU isolation assembly (1) bottom plate.

CAUTION

Ensure RAM-Ball is free of dirt and contaminants before reassembling. Failure to comply can result in slippage or excess wear of RAM-Ball assembly.

e. Inspect and clean RAM-Ball socket arm and display base with ball, as necessary, using clean lint-free wipes.

f. Insert RAM-Ball display base with ball into RAM-Ball socket arm while supporting DU isolation assembly (1).

g. Tighten the RAM-Ball Knob.

h. Align three holes in RAM-Ball mounting base with ceiling installation holes.

i. Install two flat head screws (2) in the RAM-Ball mounting base with ball using a No. 3 cross-tip screwdriver.

j. Install one Hexagon Cap Screw (7), lock washer (9), flat washer (8) and safety lanyard (6) into RAM-Ball display base using 7/16” open-end wrench.

k. Loosen RAM-Ball Knob, adjust viewing angle, and tighten RAM-Ball knob.

l. Install DU IAW Unit Maintenance Manual TM 11-7010-326-20&P.

m. Secure W2 display cable, W6 Keyboard Extension cable, and ground strap to DU isolation assembly using tie-wraps.

n. Dress tie-wraps using diagonal wire cutters.

o. Perform Functional Check IAW paragraph AC–6.1.

AC–6.11 REMOVE/REPLACE KEYBOARD UNIT (KU) STOWAGE BOX

Refer to Figure AC–6.

AC–6.11.1 REMOVE KEYBOARD UNIT (KU) STOWAGE BOX

a. Remove keyboard from stowage box, if stowed.

NOTE

The following task requires two persons.

b. Loosen the two ratchet nuts on PU until sleeve clears front hook IAW Unit Maintenance Manual TM 11-7010-326-20&P.

c. Remove Gun Mount IAW FMTV Technical Manual.

d. Slide PU with KU stowage box forward within guides to access the four captive screws (2) on stowage box.

e. Have second person loosen four KU stowage box captive screws (2) until the captive screws move freely using a No. 2 cross-tip screwdriver.

f. Remove KU stowage box (1) from PU.

g. Slide PU back into place until mounting brackets seat in rear retainers.

h. Slide self-locking front retainer sleeves over hooks and secure.

AC–6.11.2 REPLACE KEYBOARD UNIT (KU) STOWAGE BOX

NOTE

The following task requires two persons.

a. Loosen the two ratchet nuts on PU until sleeve clears front hook IAW Unit Maintenance Manual TM 11-7010-326-20&P.

b. Slide PU forward within guides to access the four captive screw installation holes on the PU.

c. Align four KU stowage box captive screws (2) with PU installation holes.

d. Have second person tighten four captive screws (2) using a No. 2 cross-tip screwdriver.

e. Slide PU back into place until mounting brackets seat in rear retainers IAW Unit Maintenance Manual TM 11-7010-326-20&P.

f. Tighten the two ratchet nuts on PU until sleeve clears front hook IAW Unit Maintenance Manual TM 11-7010-326-20&P

g. Slide self-locking front retainer sleeves over hooks and secure.

h. Stow keyboard, if necessary.

i. Replace Gun Mount IAW FMTV Technical Manual.

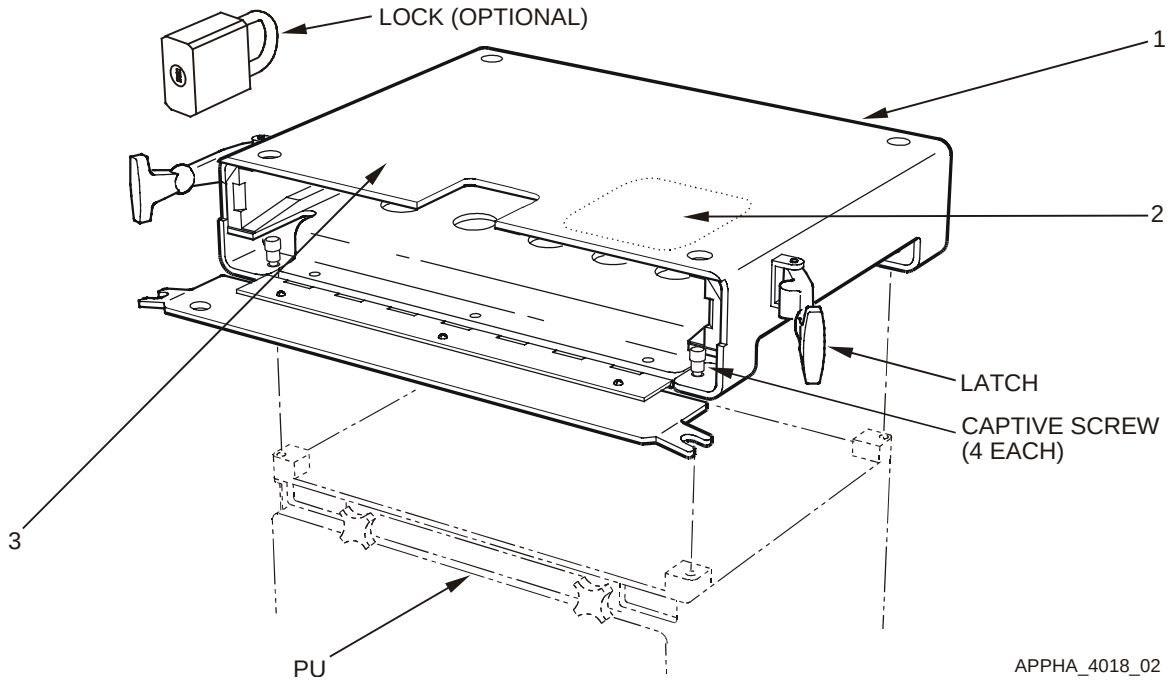

Figure AC–6. Remove and Replace Keyboard Unit (KU) Stowage Box

Key and Parts List for Figure AC–6.

ITEM NO.	NOMENCLATURE	CAGE CODE	PART NUMBER	NSN	QTY	SMR
1	Box, KU Stowage	0J198	872845-1	2540-01-481-5744	1	PAODD
2	Screw, Captive Panel	57177	PH207-05SS1032		4	PAOZZ
3	Retainer, Panel Screw	57177	214-03SS10-32		4	PAOZZ
--	Case, Keyboard	0J198	872845-11		1	XBFFF
--	Bottom, Stowage Box	0J198	872845-12		1	XBFFF
--	Side Rail, Keybd Box	0J198	872845-13		1	XBFFF
--	Side Rail, Keybd Box	0J198	872845-14		1	XBFFF
--	Door, Keyboard Box	0J198	872845-15		1	XBFFF
--	Hinge, Keyboard Box	0J198	872845-16		1	XBFFF
--	Strip, Rubber	0J198	872845-17		1	XBFFF
--	Rivet, Solid, Csk	96906	MS20426AD-4-5	5320-00-117-6884	6	PAOZZ
--	Label, Keyboard Box	0J198	881323-1		1	PAOZZ
--	Screw, Pan Head	96906	MS35206-229	5305-00-984-4989	14	PAOZZ
--	Washer, Flat	96906	MS27183-5	5310-00-983-8483	16	PAOZZ
--	Washer, Lock	96906	MS35338-41	5310-00-045-4007	13	PAOZZ
--	Nut, Plain	96906	MS35649-262	5310-00-934-9747	3	PAOZZ
--	Grip, Handle Assembly	0J198	861867-1	5340-01-G72-7639	1	XBOOO
--	Grip, Handle	0J198	861869-1	5340-01-G72-7632	1	PAOZZ
--	Screw, Machine	96906	MS35206-228	5305-00-984-4988	4	PAOZZ
--	Washer, Lock	96906	MS35338-41	5310-00-045-4007	4	PAOZZ

AC–6.12 REMOVE/REPLACE KEYBOARD UNIT (KU) STOWAGE BOX DOOR LATCHES

Refer to Figure AC–7.

AC–6.12.1 REMOVE KEYBOARD UNIT (KU) STOWAGE BOX DOOR LATCHES

a. Pull rubber T-handles and unfasten KU stowage box door latches, if necessary.

b. Remove two pan head screws (1), lock washers (2), and flat washers (3) from each KU stowage box door latch (4) using a No. 2 cross-tip screwdriver.

c. Remove KU stowage box door latch (4).

AC–6.12.2 REPLACE KEYBOARD UNIT (KU) STOWAGE BOX DOOR LATCHES

NOTE

The same KU stowage box door latch part is used for each side of the keyboard stowage box. Position bumper on one side of the latch so that it is positioned toward the side of the keyboard stowage box when fastened.

a. Align KU stowage box door latch mounting holes with mounting holes in KU stowage box.

b. Install and tighten two pan head screws (1), lock washers (2), and flat washers (3) for each KU stowage box door latch (4), using a No. 2 cross-tip screwdriver.

c. Pull rubber T-handles and fasten KU stowage box door latches.

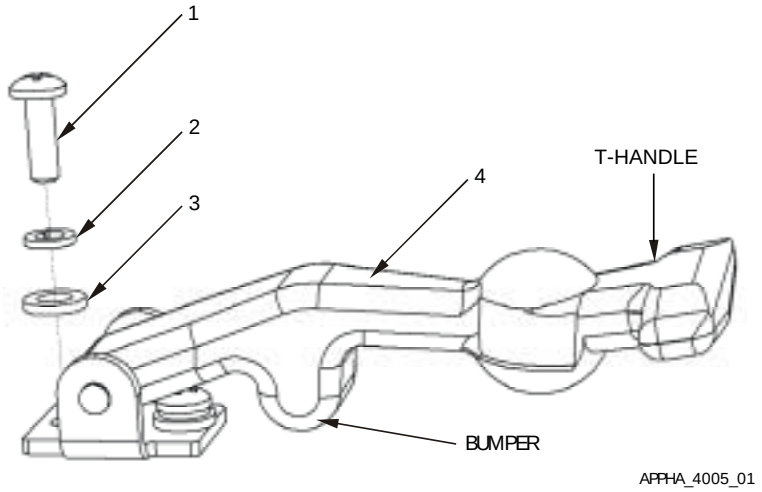

Figure AC–7. Remove and Replace Keyboard Unit (KU) Stowage Box Door Latches

Key and Parts List for Figure AC–7.

ITEM NO.	NOMENCLATURE	CAGE CODE	PART NUMBER	NSN	QTY	SMR
1	Screw, Pan Head	96906	MS35206-229	5305-00-984-4989	4	PAOZZ
2	Washer, Lock	96906	MS35338-41	5310-00-045-4007	4	PAOZZ
3	Washer, Flat	96906	MS27183-5	5310-00-983-8483	4	PAOZZ
4	(KU stowage box door latch) Latch, Thumb	94222	37-20-071-20	5340-01-351-3340	2	PAOZZ

APPENDIX AD

SUPPLEMENTARY INFORMATION FOR

DEUCE

TABLE OF CONTENTS

AD-1 GENERAL AD–3

AD-2 COMPONENT ITEM NUMBERS AND PART NUMBERS AD–3

AD-3 SYSTEM INTERFACES AD–3

- AD-3.1 MECHANICAL AD–3
- AD-3.2 CABLE INTERFACES AD–4

AD-4 COMPONENT LOCATION AD–6

- AD-4.1 GENERAL LOCATION AD–6
- AD-4.2 MOUNTING AD–7

AD-5 PLATFORM-UNIQUE TROUBLESHOOTING AD–8

AD-6 REMOVAL/REPLACEMENT IN THE PLATFORM AD–8

- AD-6.1 FUNCTIONAL CHECK AD–8
- AD-6.2 REMOVE/REPLACE W1 POWER CABLE AD–9
- AD-6.3 REMOVE/REPLACE W2 DISPLAY CABLE AD–11
- AD-6.4 REMOVE/REPLACE W3 SERIAL INTERFACE ADAPTER DEVICE (SIAD) AD–12
- AD-6.5 REMOVE/REPLACE W3P PLGR CABLE AD–13
- AD-6.6 REMOVE/REPLACE W3N INC CABLE AD–14
- AD-6.7 REMOVE/REPLACE W6 KEYBOARD INTERFACE CABLE AD–15
- AD-6.8 REMOVE/REPLACE PU ISOLATION ASSEMBLY AD–18
- AD-6.9 REMOVE/REPLACE DU ISOLATION ASSEMBLY AD–22
- AD-6.10 REMOVE/REPLACE KEYBOARD UNIT (KU) STOWAGE BOX AD–26
- AD-6.11 REMOVE/REPLACE RAM-BALL ASSEMBLY AD–28
- AD-6.12 REMOVE/REPLACE DISPLAY BRACKET & CLAMP AD–32

LIST OF ILLUSTRATIONS

Figure AD-1. Equipment Interface Block Diagram AD–5
Figure AD-2. Relative Component Locations AD–6
Figure AD-3. Mounting View Rearward AD–7
Figure AD-4. Cable Run AD–16
Figure AD-5. Remove and Replace PU Isolation Assembly AD–20
Figure AD-6. Remove and Replace DU Isolation Assembly AD–24
Figure AD-7. Remove and Replace Keyboard Stowage Box AD–27
Figure AD-8. Remove and Replace RAM-Ball Assembly AD–30
Figure AD-9. Remove and Replace Display Bracket & Clamp. AD–34

AD-1 GENERAL

This appendix describes the interfaces between the FBCB2 equipment and the Deuce. This appendix also identifies the component parts of the Deuce platform installation kit and details the removal and replacement procedures particular to the Deuce.

AD-2 COMPONENT ITEM NUMBERS AND PART NUMBERS

Key and Parts List tables contained in the Removal and Replacement section of this Appendix serve a dual purpose. Use the Item Numbers in the Key to identify components and attaching hardware shown in the Figures illustrating the tasks. The nomenclature and part number for the hardware and equipment mounting components of the installation kit also are keyed to the Item Numbers in the tables. Additional parts ordering information, such as Contractor and Government Entity code (CAGE); National Stock Number (NSN); quantity; and Source, Maintenance, and Recoverability (SMR) codes, is provided. The Key and Parts List follows the task illustrations.

AD-3 SYSTEM INTERFACES

AD-3.1 MECHANICAL

The mechanical hardware-to-hardware interfaces include:

a. Cables

b. Processor Unit (PU)

c. Display Unit (DU)

d. Keyboard Unit (KU)

AD-3.2 CABLE INTERFACES

Figure AD-1 illustrates a block diagram of the interface between FBCB2 equipment and the Deuce (Platform). Figure AD-1 also illustrates the signal and control interfaces along with the terminal connector labels (e.g., P1, P2). The purpose of each cable is listed below:

Cable Name	Purpose
W1–Cable	Supplies vehicle power (28 VDC) to the AN/UYK-128(V) computer and its subassemblies.
W2–Cable	Supplies power and signals to the Display Unit (DU) and Keyboard Unit (KU). Returns Man Machine Interface (MMI) information from the KU to the Processor Unit (PU).
W3–Cable	The Serial Interface Adapter Device (SIAD) is a conduit assembly that breaks out each of the serial interface ports to a connector.
W3P–Cable	Collects position and time information from the PLGR.
W3N–Cable	Provides duplex communication between the PU, Internet Controller (INC) and radios.
W5–Cable	The Expansion Interface Adapter Device (EIAD) is connected to the Universal Serial Bus (USB) connector only when this vehicle is to be used in a Tactical Operations Center (TOC) setup. When used in this configuration, it is connected between the PU J5 connector and local router.
W6–Cable	Interface cable connects the display to the inline connector on the electrical equipment rack. The keyboard input cable is connected to the other side of the inline connector.
Ground Strap	Provides safety ground for the PU.
Ground Strap	Provides safety ground for the DU.

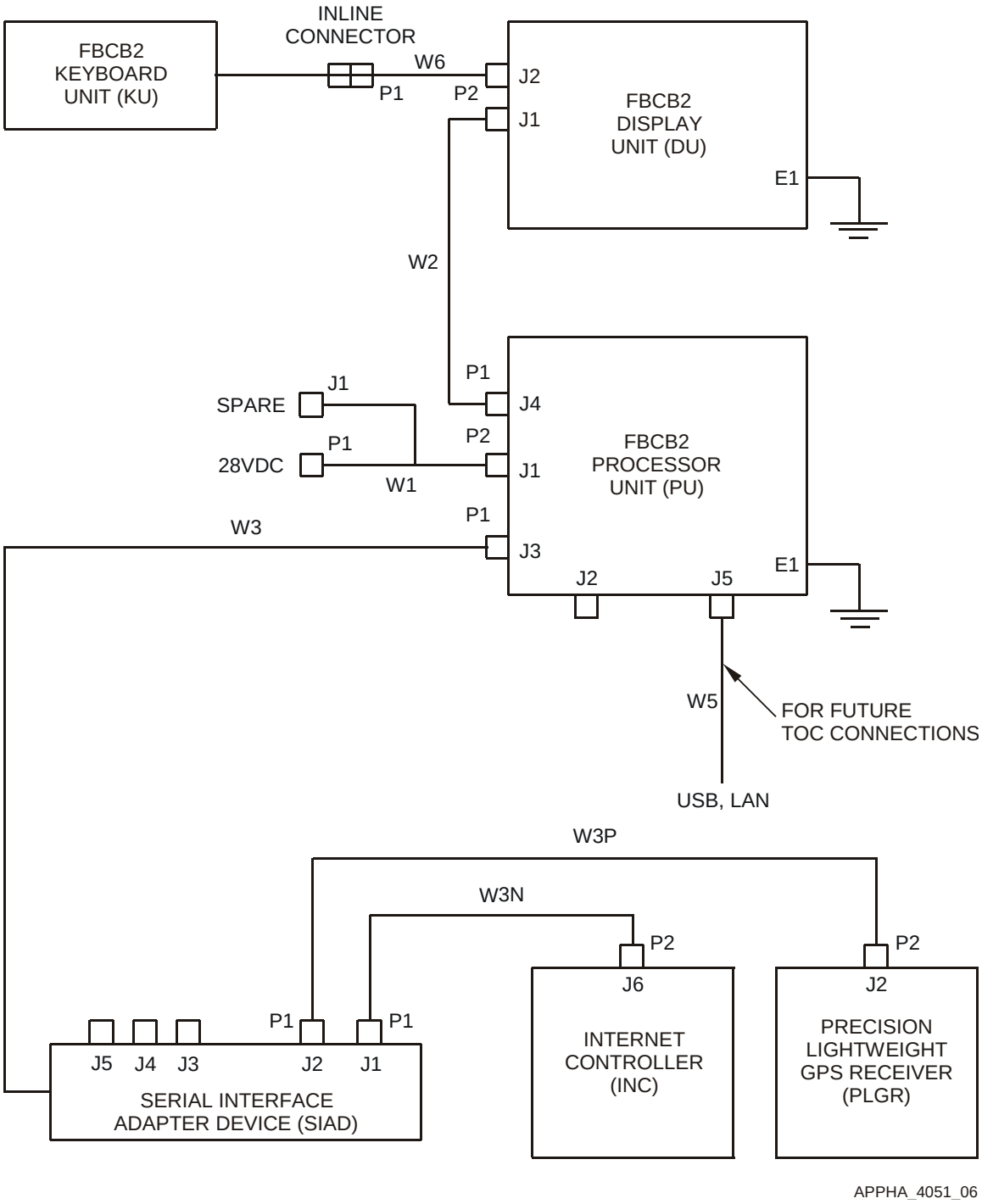

Figure AD-1. Equipment Interface Block Diagram

AD-4 COMPONENT LOCATION

AD-4.1 GENERAL LOCATION

Figure AD-2 shows the relative locations of the FBCB2 computer equipment and mounting components in the Deuce platform.

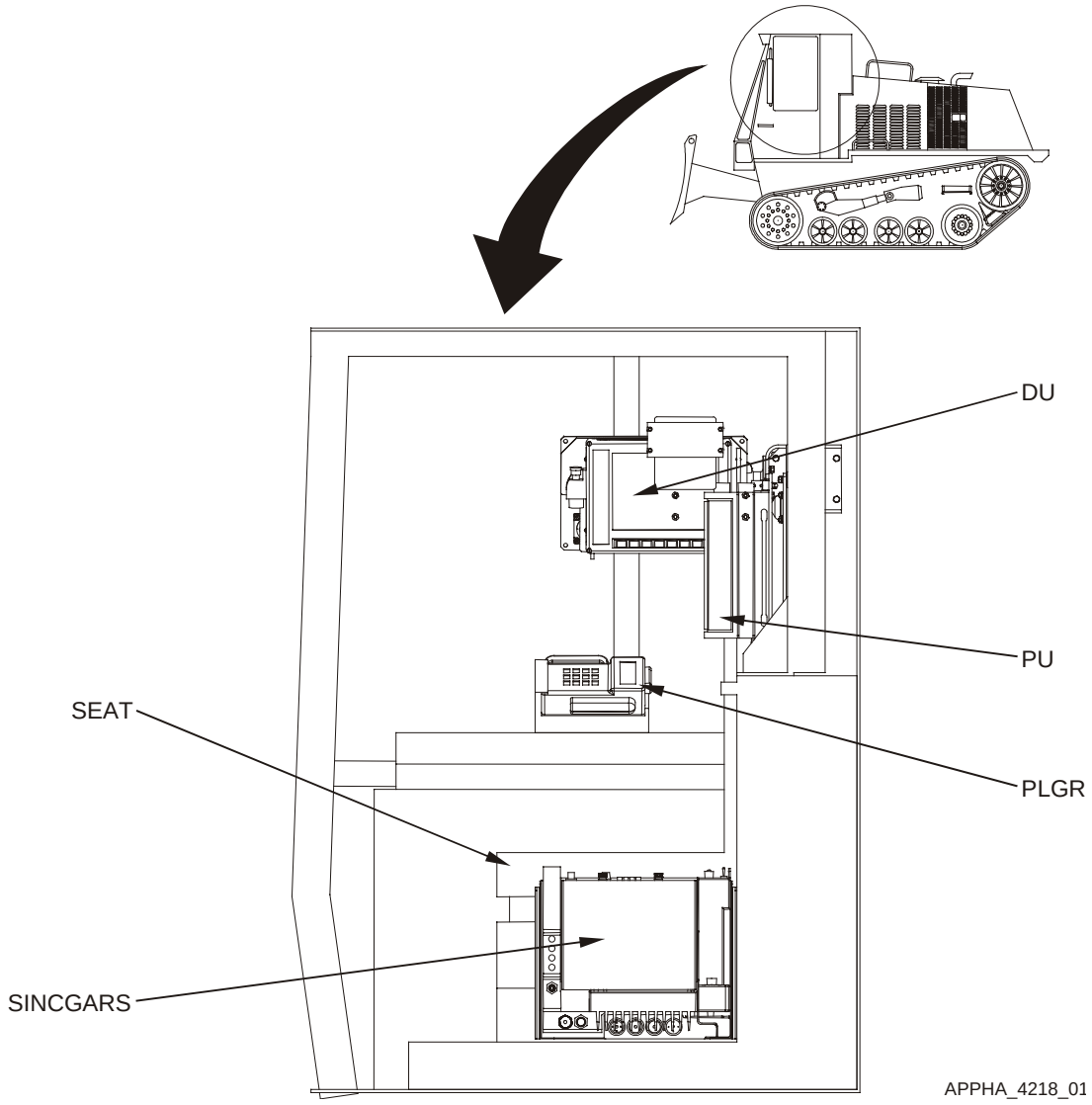

Figure AD-2. Relative Component Locations

AD-4.2 MOUNTING

Figure AD-3 illustrates equipment mounting looking toward the back of the vehicle.

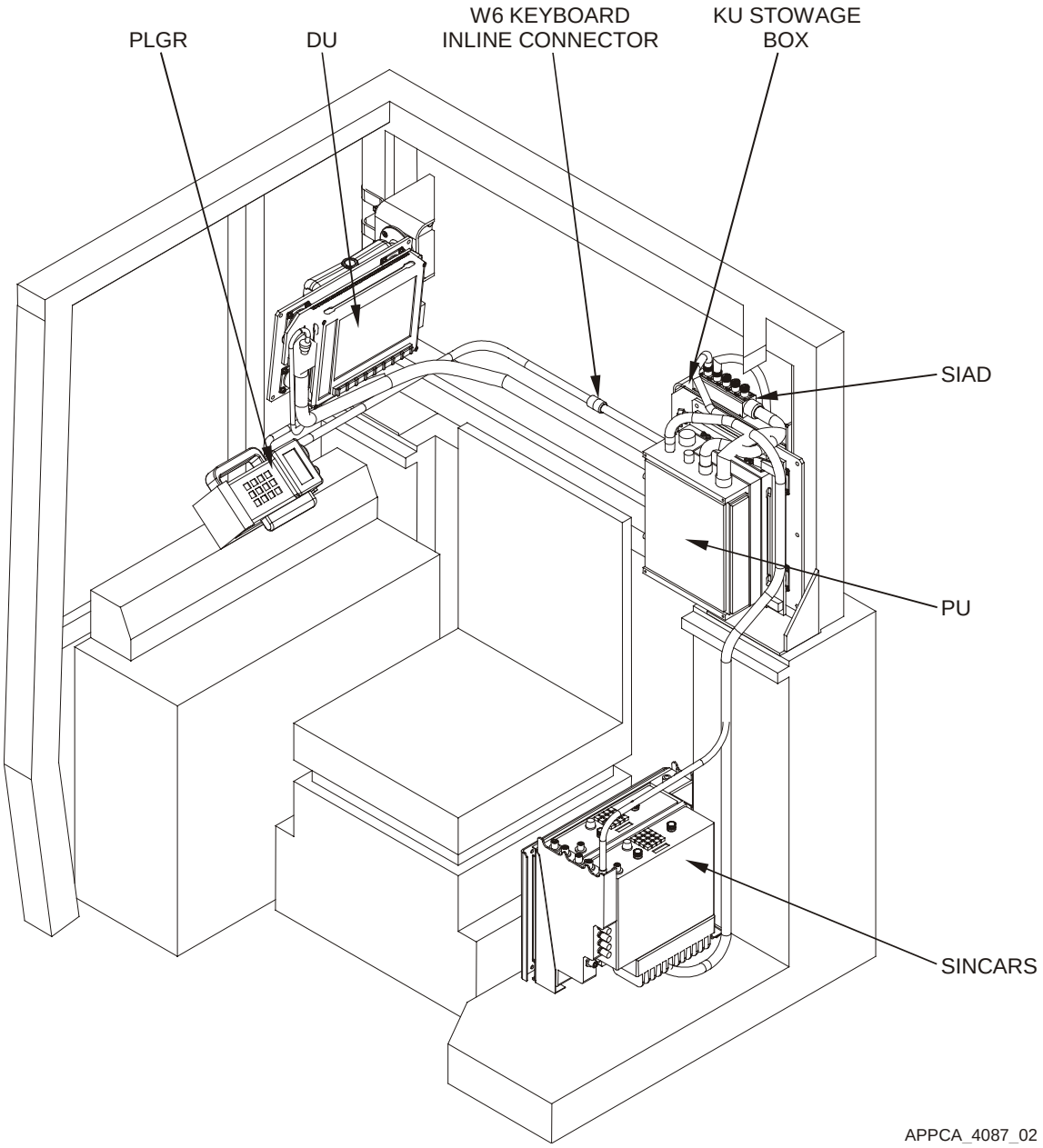

Figure AD-3. Mounting View Rearward

AD-5 PLATFORM-UNIQUE TROUBLESHOOTING

Some configurations of the Deuce have two PLGR units physically mounted in the vehicle. Only one PLGR is connected. Make sure to address only the PLGR connected to the AN/UYK-128(V) computer.

AD-6 REMOVAL/REPLACEMENT IN THE PLATFORM

Most installations must be tailored to the platform. Cables and brackets are unique to the installation. Before a part or assembly is removed from a vehicle, fill out a “Maintenance Request” DA Form 2407. One copy of this completed form must remain with the vehicle and the remaining copies must be kept with the failed component. To prove the operability of the system after an item is replaced, perform the system Functional Check.

AD-6.1 FUNCTIONAL CHECK

AD-6.1.1 POWER UP

Power up and initialize all interface equipment and the AN/UYK-128(V) In Accordance With (IAW) the Operator’s Manual TM 11-7010-326-10, or Pocket Guide TB 11-7010-326-10.

AD-6.1.2 VERIFICATION

NOTE

Observe that the Display Unit PWR, DISP and CPU green LED lights are lit.

a. Observe that the PLGR synchronizes with PU, indicated by the PLGR dialog box showing green.

b. Observe that the Router synchronizes with the PU, indicated by the Router dialog box showing green.

c. At the Session Manager screen, select OPS button to display the OPS screen.

d. Verify the GPS status is either green or amber on the Classification/Status Bar.

e. Verify the Communications status is either green or amber on the Classification/Status Bar.

AD-6.1.3 POWER DOWN

Power down all interface equipment and the AN/UYK-128(V) IAW THE Operator’s Manual TM 11-7010-326-10, or Pocket Guide TB 11-7010-326-10.

AD-6.2 REMOVE/REPLACE W1 POWER CABLE

Refer to Figure AD-4.

AD-6.2.1 REMOVE W1 POWER CABLE

WARNING

Before conducting maintenance involving the removal and replacement of system components, ensure that all power to the FBCB2 system is off (including power from the vehicle). Failure to comply with warning may result in equipment damage or injury to personnel.

a. Power down AN/UYK-128(V) system IAW Operator's Manual TM 11-7010-326-10, or Pocket Guide TB 11-7010-326-10.

b. Power down SINCGARS IAW TM 11-5820-890-10-8.

CAUTION

Ensure support is provided to Vehicle Amplifier-Adapter (VAA) while disconnecting the W1-P1 Cable Connector. Failure to comply could result in the VAA falling causing equipment damage or cable damage.

c. Unlatch and lift the Vehicle Amplifier-Adapter (VAA) AM-7239/VRC upward to access W1-P1 power cable connector.

d. Disconnect W1-P1 cable connector from the SINCGARS Mounting Base (MB) (MT-6352/VRC) A4-J2 connector.

e. Remove the VAA from its mounting rack.

f. Disconnect W1-J1 cable connector from interface connector.

g. Disconnect W1-P2 cable connector from PU J1 connector.

h. Install protective cap on PU J1 connector.

NOTE

Note cable routing and tie-wrap locations before removing cable or tie-wraps.

i. Remove tie-wraps securing W1 cable using diagonal wire cutters.

j. Remove W1 power cable (1).

k. Replace the VAA into its mounting rack.

AD-6.2.2 REPLACE W1 POWER CABLE

a. Route the replacement W1 power cable (1) along existing cables behind PU mounting bracket.

b. Remove protective cap from PU J1 connector.

c. Connect W1-P2 cable connector to PU J1 connector.

CAUTION

Ensure support is provided to Vehicle Amplifier-Adapter (VAA) while connecting the W1-P1 Cable Connector. Failure to comply could result in the VAA falling causing equipment damage or cable damage.

d. Lift the Vehicle Amplifier-Adapter (VAA) AM-7239/VRC upward to access W1-P1 power cable connector.

e. Connect W1-P1 cable connector to SINCGARS Mounting Base (MB) (MT-6352A/VRC) A4-J2 connector.

f. Connect W1-J1 cable connector to interface connector.

g. Secure VAA in original mounting position IAW TM 11-5820-890-10-8.

h. Secure W1 cable using tie-wraps.

i. Dress tie-wraps using diagonal wire cutters.

j. Perform Functional Check IAW AD-6.1.

AD-6.3 REMOVE/REPLACE W2 DISPLAY CABLE

Refer to Figure AD-4.

AD-6.3.1 REMOVE W2 DISPLAY CABLE

WARNING

Before conducting maintenance involving the removal and replacement of system components, ensure that all power to the FBCB2 system is off (including power from the vehicle). Failure to comply with warning may result in equipment damage or injury to personnel.

a. Power down AN/UYK-128(V) system IAW Operator's Manual TM 11-7010-326-10, or Pocket Guide TB 11-7010-326-10.

b. Disconnect W2-P1 cable connector from PU J4 connector.

c. Install protective cap on PU J4 connector.

d. Disconnect W2-P2 cable connector from display J1 connector.

e. Install protective cap on display J1 connector.

NOTE

Note cable routing and tie-wrap locations before removing cable or tie-wraps.

f. Remove tie-wraps securing W2 cable using diagonal wire cutters.

g. Remove W2 display cable (5).

AD-6.3.2 REPLACE W2 DISPLAY CABLE

a. Route W2 display cable (5) along existing cables behind PU mounting bracket.

b. Remove protective cap from display J1 connector.

c. Connect W2-P2 cable connector to display J1 connector.

d. Remove protective cap from PU J4 connector.

e. Connect W2-P1 cable connector to PU J4 connector.

f. Secure W2 cable using tie-wraps.

g. Dress tie-wraps using diagonal wire cutters.

h. Perform Functional Check IAW paragraph AD-6.1.

AD-6.4 REMOVE/REPLACE W3 SERIAL INTERFACE ADAPTER DEVICE (SIAD)

Refer to Figure AD-4.

AD-6.4.1 REMOVE W3 SERIAL INTERFACE ADAPTER DEVICE (SIAD)

WARNING

Before conducting maintenance involving the removal and replacement of system components, ensure that all power to the FBCB2 system is off (including power from the vehicle). Failure to comply with warning may result in equipment damage or injury to personnel.

a. Power down AN/UYK-128(V) system IAW Operator's Manual TM 11-7010-326-10, or Pocket Guide TB 11-7010-326-10.

b. Disconnect W3N-P1 cable connector from W3 SIAD J1 connector.

c. Disconnect W3P-P1 cable connector from W3 SIAD J2 connector.

d. Disconnect W3 SIAD-P1 cable connector from PU J3 connector.

e. Install protective cap on PU J3 connector.

NOTE

Note cable routing and tie-wrap locations before removing cable or tie-wraps.

f. Remove tie-wraps securing W3 SIAD using diagonal wire cutters.

g. Remove W3 SIAD (2).

AD-6.4.2 REPLACE W3 SERIAL INTERFACE ADAPTER DEVICE (SIAD)

a. Route W3 SIAD (2).

b. Remove protective cap from PU J3 connector.

c. Connect W3 SIAD-P1 cable connector to PU J3 connector.

d. Connect W3P-P1 cable connector to W3 SIAD J2 connector.

e. Connect W3N-P1 cable connector to W3 SIAD J1 connector.

f. Secure W3 SIAD using tie-wraps.

g. Dress tie-wraps using diagonal wire cutters.

h. Perform Functional Check IAW paragraph AD-6.1.

AD-6.5 REMOVE/REPLACE W3P PLGR CABLE

Refer to Figure AD-4.

AD-6.5.1 REMOVE W3P PLGR CABLE

WARNING

Before conducting maintenance involving the removal and replacement of system components, ensure that all power to the FBCB2 system is off (including power from the vehicle). Failure to comply with warning may result in equipment damage or injury to personnel.

a. Power down AN/UYK-128(V) system IAW Operator's Manual TM 11-7010-326-10, or Pocket Guide TB 11-7010-326-10.

b. Disconnect W3P-P1 cable connector from W3 SIAD J2 connector.

c. Remove PLGR from mount.

d. Disconnect W3-P2 cable connector from PLGR J2 connector using an offset flat screwdriver.

NOTE

Note cable routing and tie-wrap locations before removing cable or tie-wraps.

e. Remove tie-wraps securing W3P cable using diagonal wire cutters.

f. Remove W3P cable (3).

AD-6.5.2 REPLACE W3P PLGR CABLE

a. Route W3P cable (3) along existing cables behind PU mounting bracket.

b. Connect W3P-P2 cable connector to PLGR J2 connector using an offset flat screwdriver.

c. Install PLGR in mount.

d. Connect W3P-P1 cable connector to W3 SIAD J2 connector.

e. Secure W3P cable using tie-wraps.

f. Dress tie-wraps using diagonal wire cutters.

g. Perform Functional Check IAW paragraph AD-6.1.

AD-6.6 REMOVE/REPLACE W3N INC CABLE

Refer to Figure AD-4.

AD-6.6.1 REMOVE W3N INC CABLE

WARNING

Before conducting maintenance involving the removal and replacement of system components, ensure that all power to the FBCB2 system is off (including power from the vehicle). Failure to comply with warning may result in equipment damage or injury to personnel.

a. Power down AN/UYK-128(V) system IAW Operator's Manual TM 11-7010-326-10, or Pocket Guide TB 11-7010-326-10.

b. Disconnect W3N-P1 cable connector from W3 SIAD J1 connector.

c. Disconnect W3N-P2 cable connector from SINCGARS INC J6 connector.

NOTE

Note the cable routing and tie-wrap locations before removing cable or tie-wraps.

d. Remove tie-wraps securing W3N cable using diagonal cutters.

e. Remove W3N cable (4).

AD-6.6.2 REPLACE W3N INC CABLE

a. Route W3N cable (4) along existing cables behind PU mounting bracket.

b. Connect W3N-P2 cable connector to SINCGARS INC J6 connector.

c. Connect W3N-P1 cable connector to W3 SIAD J1 connector.

d. Secure W3N cable using tie-wraps.

e. Dress tie-wraps using diagonal wire cutters.

f. Perform Functional Check IAW paragraph AD-6.1.

AD-6.7 REMOVE/REPLACE W6 KEYBOARD INTERFACE CABLE

Refer to Figure AD-4.

AD-6.7.1 REMOVE W6 KEYBOARD INTERFACE CABLE

WARNING

Before conducting maintenance involving the removal or replacement of system components, ensure that all power to the FBCB2 system is off (including power from the vehicle). Failure to comply with warning may result in equipment damage or injury to personnel.

a. Power down all interface equipment and the AN/UYK-128(V) IAW the Operator's Manual TM 11-7010-326-10, or Pocket Guide TB 11-7010-326-10.

b. Disconnect W6-P2 keyboard interface cable connector from display J2 connector.

c. Install protective cap on display J2 connector.

NOTE

Cable attached to keyboard remains connected to keyboard in drawer and at back of keyboard inline connector behind equipment rack.

d. Disconnect W6-P1 keyboard interface cable connector from the inline connector (7) located near the KU Stowage Box

NOTE

Note cable routing and tie-wrap locations before removing cable or tie-wraps.

e. Remove tie-wraps securing W6 cable using diagonal wire cutters.

f. Remove W6 (6) keyboard interface cable.

AD-6.7.2 REPLACE W6 KEYBOARD INTERFACE CABLE

a. Route W6 (6) keyboard interface cable from DU to the inline connector (7) located near the KU Stowage Box.

b. Connect W6-P1 keyboard interface cable connector to the inline connector (7) on the outside of the equipment rack.

c. Remove protective cap from display J2 connector.

d. Connect W6-P2 keyboard interface cable connector to display J2 connector.

e. Secure W6 keyboard interface cable to W2 display cable and DU ground strap using tie-wraps.

f. Dress tie-wraps using diagonal wire cutters.

g. Perform Functional Check IAW paragraph 6.1.

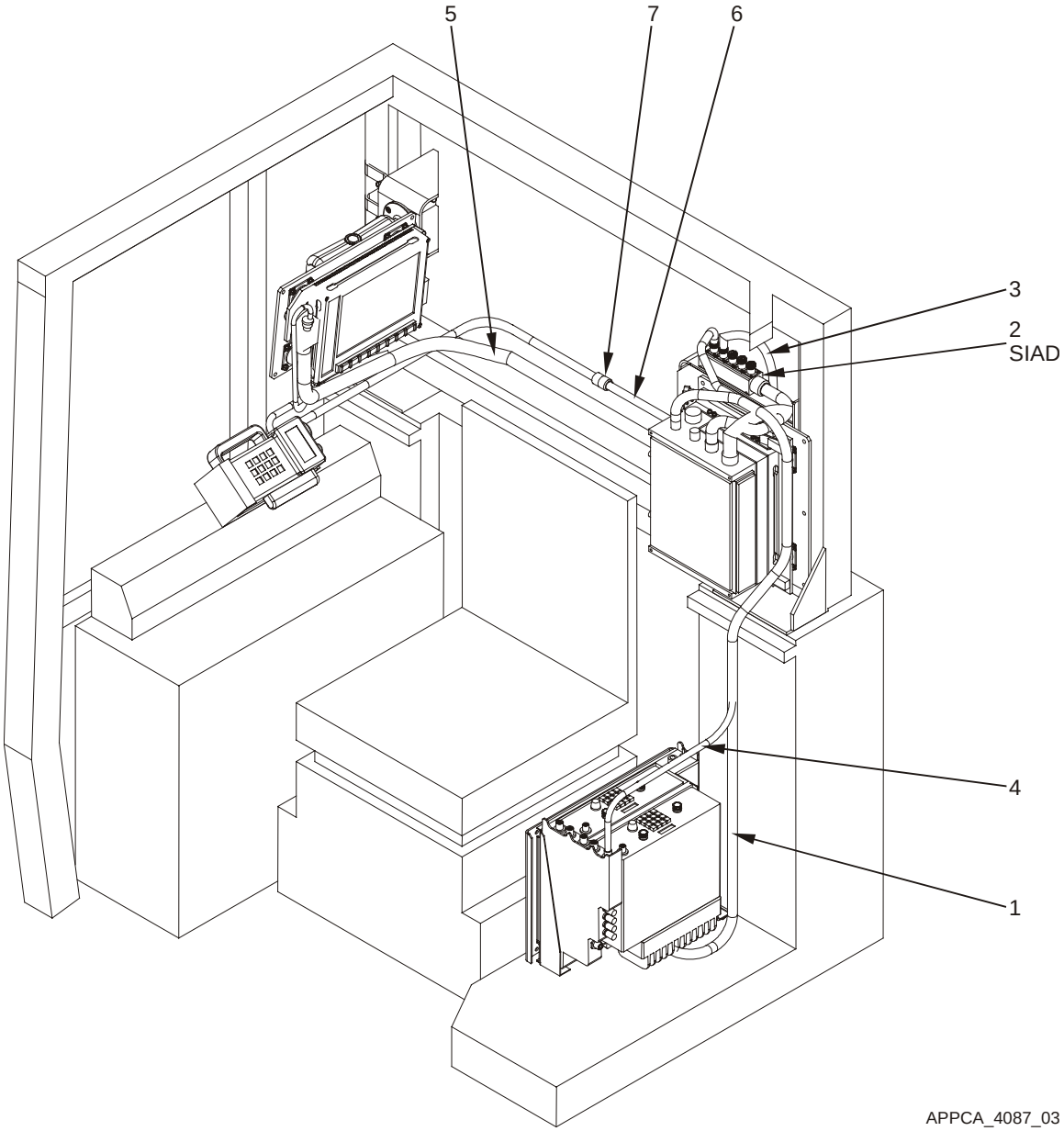

Figure AD-4. Cable Run

Figure AD-4. Cable Run

ITEM NO.	NOMENCLATURE	CAGE CODE	PART NUMBER	NSN	QTY	SMR
1	Cable Assembly W1	0J198	861880-6	5995-01-478-4952	1	PAOZZ
2	Adapter Assy SIAD W3	0J198	881331-1	4920-01-478-3722	1	PAODD
3	Cable Assembly W3P	0J198	881335-3	5995-01-478-4898	1	PAOZZ
4	Cable Assembly W3N	0J198	881336-1	5995-01-478-4913	1	PAOZZ
5	Cable Assembly W2	0J198	881327-2	5995-01-478-4873	1	PAOZZ
6	Cable Assembly W6	0J198	881289-2	5995-01-478-4921	1	PAOZZ
7	W6 Keyboard Inline Connector					
--	Strap, Tie Down, Elect	39428	7130K31		A/R	XBOZZ

AD-6.8 REMOVE/REPLACE PU ISOLATION ASSEMBLY

Refer to Figure AD-5.

NOTE

Ground straps are attached to components at one end (PU and DU) and a frame ground at the other end. Regardless of where the ground strap terminates, it is usually a burnished (void of paint) area. If the ground strap is removed from a burnished area make sure to return it to the same burnished area. Where applicable, always connect the ground strap first when assembling, and disconnect the ground strap last when disassembling.

AD-6.8.1 REMOVE PU ISOLATION ASSEMBLY

WARNING

Before conducting maintenance involving the removal and replacement of system components, ensure that all power to the FBCB2 system is off (including power from the vehicle). Failure to comply with warning may result in equipment damage or injury to personnel.

a. Power down AN/UYK-128(V) system IAW Operator's Manual TM 11-7010-326-10, or Pocket Guide TB 11-7010-326-10.

NOTE

Do not remove the Removable Hard Disk Drive Cartridge (RHDDC) or thermal guard (if installed) from PU.

b. Remove PU IAW Unit Maintenance Manual TM 11-7010-326-20&P.

c. Remove one hex head screw (7), lock washers (3), flat washers (4) and ground strap from PU isolation assembly (1) bottom plate using a 7/16" socket with ratchet and 3" extension.

d. Remove remaining three hex nuts (2), lock washers (3) and flat washers (4) from PU isolation assembly (1) bottom plate using a 7/16" socket with ratchet and 3" extension.

e. Remove PU isolation assembly (1).

AD-6.8.2 REPLACE PU ISOLATION ASSEMBLY

a. Obtain replacement PU Isolation Assembly.

b. Align four PU Isolation Assembly (1) bottom plate holes with the KU Stowage Box (1) installation insert and the structures three adhesive bonded studs.

NOTE

To ensure positive ground, PU ground strap must make direct contact with bare metal. Ensure PU ground strap is installed in its original location at the PU isolation assembly bottom plate mounting hole. Slip the lock washer, flat washer and ground strap on the mounting screw before installing and tightening screw.

c. Install one hex screw (7), lock washers (3), flat washers (4), and ground strap on PU isolation assembly (1) bottom plate) using a 7/16" socket with ratchet and 3" extension.

d. Install remaining three hex nuts (2), lock washers (3) and flat washers (4) on PU isolation assembly (1) bottom plate using a 7/16" socket with ratchet and 3" extension.

e. Replace PU IAW Unit Maintenance Manual TM 11-7010-326-20&P.

f. Perform Functional Check IAW paragraph AD-6.1.

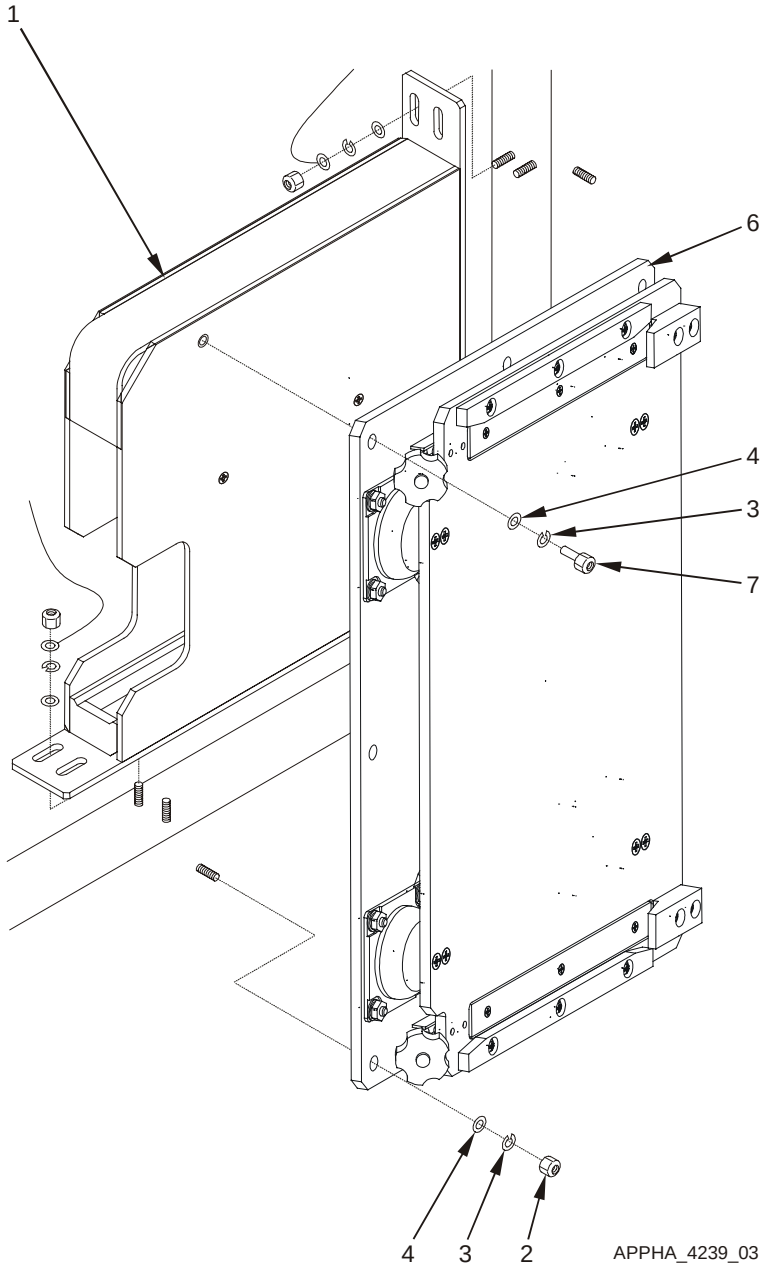

Figure AD-5. Remove and Replace PU Isolation Assembly

Key and Parts List for Figure AD-5.

ITEM NO.	NOMENCLATURE	CAGE CODE	PART NUMBER	NSN	QTY	SMR
1	Box, KU Stowage	0J198	881318-1		1	PAOZZ
2	Hex Nut	96906	MS35650-3252	5310-01-043-0520	3	PAOZZ
3	Washer, Lock	96906	MS35338-44	5310-00-582-5965	8	PAOZZ
4	Washer, Flat	96906	MS27183-10	5310-00-809-4058	8	PAOZZ
5	(Safety lanyard) Wire Rope Assembly	39428	30645T11	4010-01-G72-7647	1	PAOZZ
6	(PU isolation assembly) Plate, Resilient Mount PU	0J198	872826-1	5340-01-481-5742	1	PAODD
7	Hex Screw	80204	B1821AH025C100N	5305-01-389-7984	1	PAOZZ

AD-6.9 REMOVE/REPLACE DU ISOLATION ASSEMBLY

Refer to Figure AD-6.

NOTE

Ground straps are attached to components at one end (PU and DU) and a frame ground at the other end. Regardless of where the ground strap terminates, it is usually a burnished (void of paint) area. If the ground strap is removed from a burnished area make sure to return it to the same burnished area. Where applicable, always connect the ground strap first when assembling, and disconnect the ground strap last when disassembling.

AD-6.9.1 REMOVE DU ISOLATION ASSEMBLY

WARNING

Before conducting maintenance involving the removal and replacement of system components, ensure that all power to the FBCB2 system is off (including power from the vehicle). Failure to comply with warning may result in equipment damage or injury to personnel.

a. Power down AN/UYK-128(V) system IAW Operator's Manual TM 11-7010-326-10, or Pocket Guide TB 11-7010-326-10.

NOTE

Ground strap attaches to the wing nut located on the DU, and to the vehicle body ground.

b. Remove DU IAW Unit Maintenance Manual TM 11-7010-326-20&P.

c. Loosen RAM-Ball Knob, if necessary.

d. Extend display fully until links are in over-center position to allow access to PU.

e. Remove one wing nut (4), safety lanyard (5), spacer (3), and square neck bolt (2) from DU isolation assembly (1) bottom plate and DU mount assembly.

f. Remove the remaining three wing nuts (4), spacers (3), and square neck bolts (2) from DU isolation assembly (1) bottom plate and DU mount assembly.

g. Remove DU isolation assembly (1) from DU mount assembly.

AD-6.9.2 REPLACE DU ISOLATION ASSEMBLY

a. Obtain the replacement DU Isolation Assembly.

b. Align four holes in DU isolation assembly (1) bottom plate with DU mount assembly installation holes.

NOTE

To ensure positive ground, DU ground strap must make direct contact with bare metal. Ensure DU ground strap is installed in its original location at the DU isolation assembly bottom plate mounting hole. Slide a lock washer, flat washer and ground strap onto mounting screw before installing through the installation hole.

AD-6.9.2 REPLACE DU ISOLATION ASSEMBLY (Continued)

c. Install the one wing nut (4), spacer (3), safety Lanyard (5), and square neck bolt (2) to DU isolation assembly (1) bottom plate and DU mount assembly.

d. Install the remaining three wing nuts (4), spacers (3), and square neck bolts (2) to DU isolation assembly (1) bottom plate and DU mount assembly.

e. Return display mount links to the partially folded position and stow display.

f. Tighten RAM-Ball Knob.

g. Install DU IAW Unit Maintenance Manual TM 11-7010-326-20&P.

h. Perform Functional Check IAW paragraph AD-6.1.

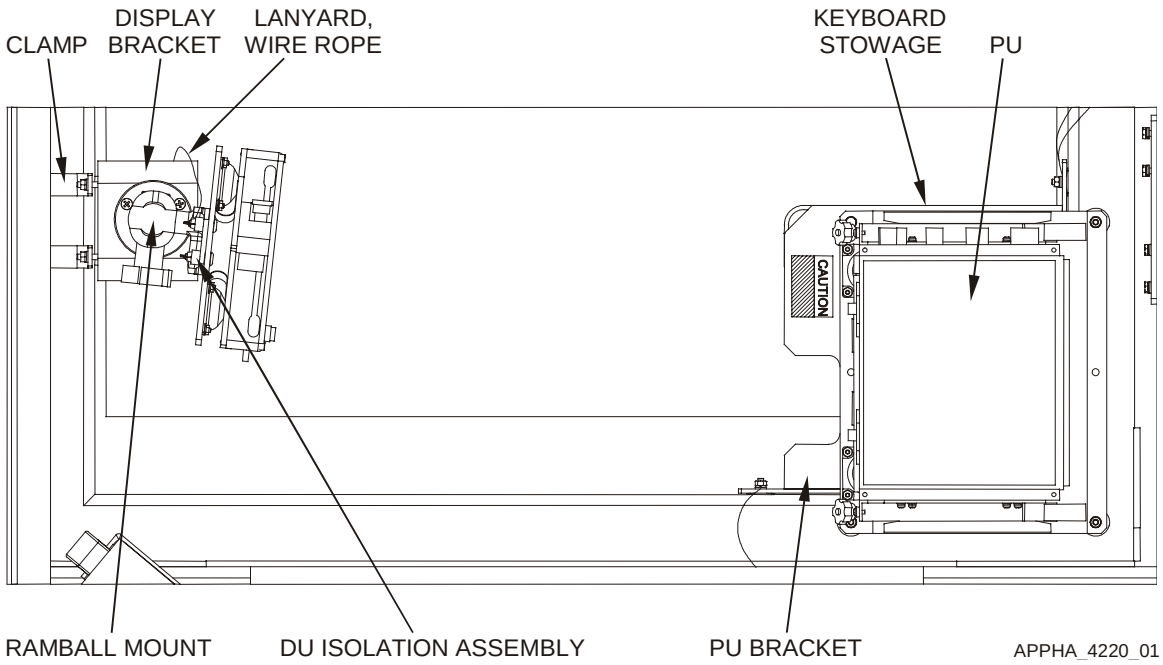

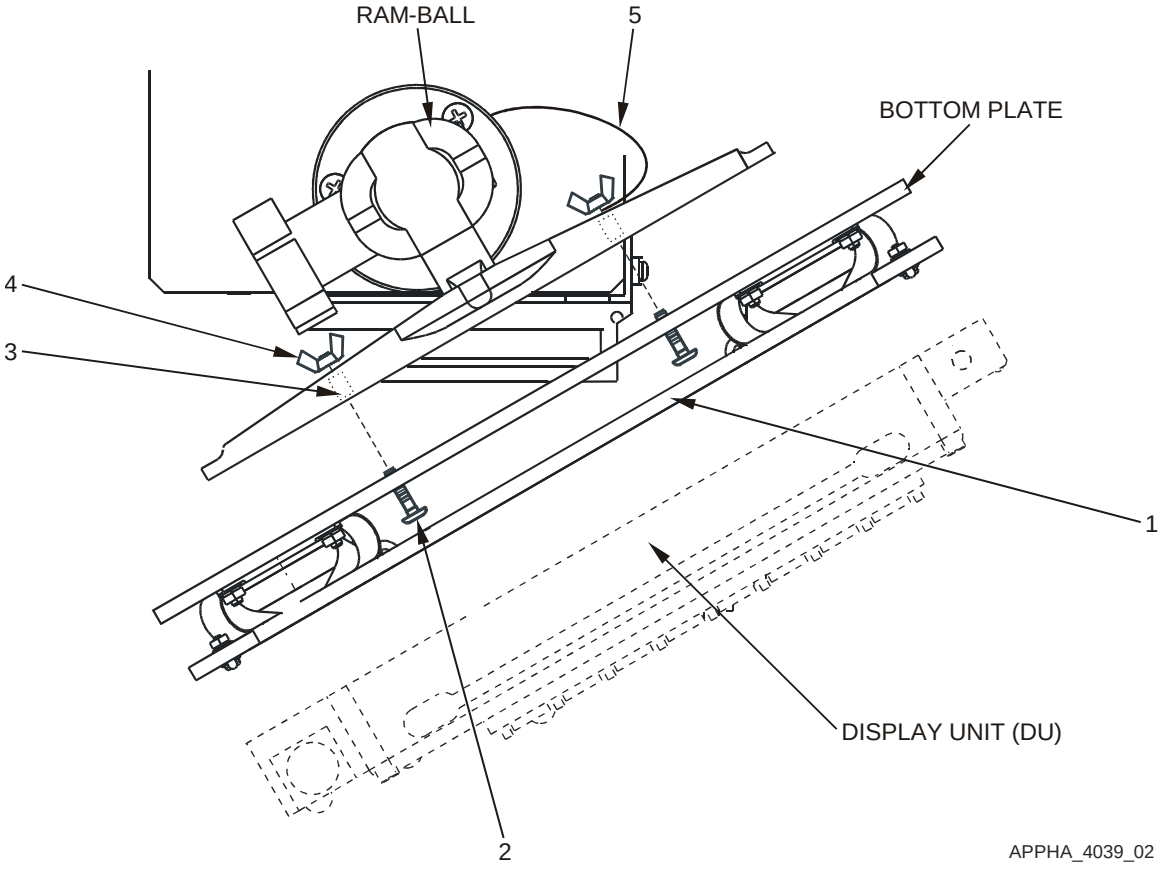

Figure AD-6. Remove and Replace DU Isolation Assembly

Key and Parts List for Figure AD-6.

ITEM NO.	NOMENCLATURE	CAGE CODE	PART NUMBER	NSN	QTY	SMR
1	(DU isolation assembly) Plate, Resilient Mount DU	0J198	872870-1	5340-01-481-5757	1	PAODD
2	Bolt, Square Neck	96906	MS35751-17	5306-00-889-2943	4	PAOZZ
3	Spacer, Aluminum	57177	10705AL315C	5365-01-G72-7642	4	PAOZZ
4	Nut, Self-Locking, Wing	96906	MS51553-420	5310-01-384-2546	4	PAOZZ
5	(Safety lanyard) Wire Rope Assembly	39428	30645T11	4010-01-G72-7647	1	PAOZZ
--	Strap, Tie Down, Elect	39428	7130K31		6	PAOZZ
--	Assembly, DU Lock	0J198	872843-1	5340-01-672-7629	1	XBOOO
--	Bracket, Locking	0J198	861871-3	5340-01-672-7630	1	XBOZZ
--	Washer, Lock	96906	MS35338-42	5310-00-045-3299	2	PAOZZ
--	Screw	80205	MS35190-253	5305-00-059-4568	2	PAOZZ

AD-6.10 REMOVE/REPLACE KEYBOARD UNIT (KU) STOWAGE BOX

Refer to Figure AD-7.

AD-6.10.1 REMOVE KEYBOARD UNIT (KU) STOWAGE BOX

WARNING

Before conducting maintenance involving the removal and replacement of system components, ensure that all power to the FBCB2 system is off (including power from the vehicle). Failure to comply with warning may result in equipment damage or injury to personnel.

a. Power down AN/UYK-128(V) system IAW Operator's Manual TM 11-7010-326-10, or Pocket Guide TB 11-7010-326-10.

b. Remove the KU from the Stowage Box.

c. Remove one hex head screw (9), lock washer (8) and flat washer (7) securing PU Isolation assembly (6) to KU Stowage Box (1).

d. Remove three hex nuts (2), safety lanyards (5), lock washers (3) and flat washers (4) from KU stowage box (1) bottom plate using a 7/16" socket with ratchet and 3" extension.

e. Remove keyboard stowage box (1).

AD-6.10.2 REPLACE KEYBOARD UNIT (KU) STOWAGE BOX

a. Obtain the replacement keyboard stowage box (1).

b. Align four holes in KU stowage box (1) with the adhesive bonded studs on the platform structure.

NOTE

First top safety lanyard loops over and around fan bracket (two times if necessary).

NOTE

Second top safety lanyard loops under and around the vehicle beam.

c. Install three hex nuts (2), safety lanyards (5), lock washers (3) and flat washers (4) in KU stowage box (1) bottom plate using a 7/16" socket with ratchet and 3" extension.

d. Install one hex head screw (9), lock washer (8), and flat washer (7) into the PU Isolation Assembly (6) bottom plate using a 7/16" socket with ratchet and 3" extension.

e. Install PU Isolation Assembly in accordance with paragraph AD-6.8.2.

f. Stow KU if necessary.

g. Perform Functional Check IAW paragraph AD-6.1.

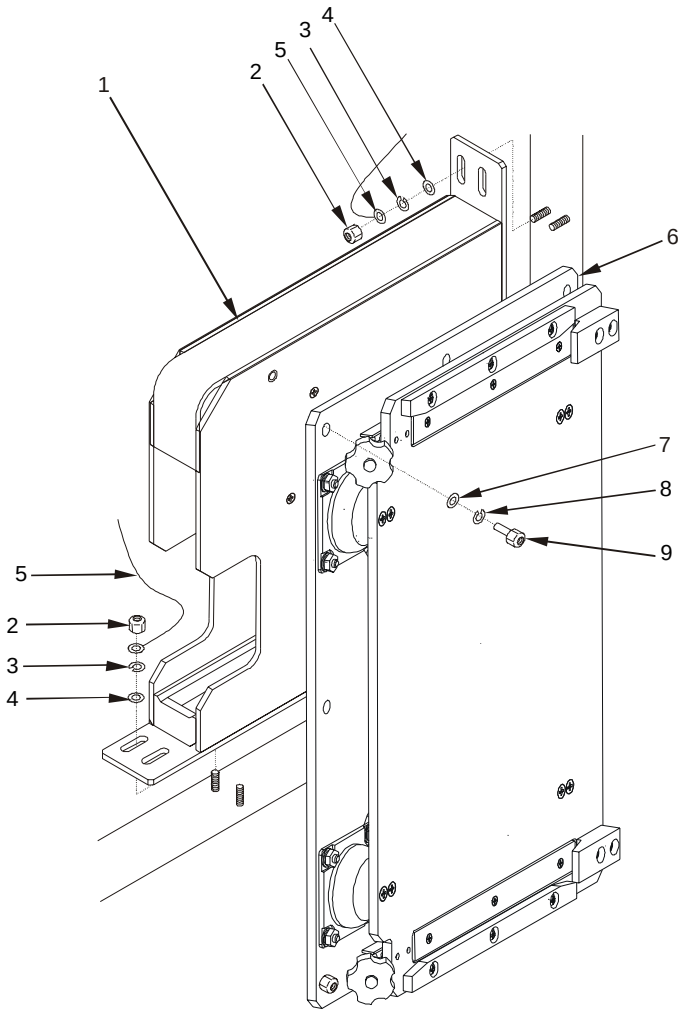

APPHA_4239_03

Figure AD-7. Remove and Replace Keyboard Stowage Box

Key and Parts List for Figure AD-7.

ITEM NO.	NOMENCLATURE	CAGE CODE	PART NUMBER	NSN	QTY	SMR
1	(Box, KU Stowage) CPU Mounting Bracket	0J198	881318-1		1	PAOZZ
2	Hex Nut	96906	MS35650-3252	5310-00-043-0520	4	PAOZZ
3	Washer, Lock	96906	MS35338-44	5310-00-582-5965	4	PAOZZ
4	Washer, Flat	96906	MS27183-10	5310-00-809-4058	4	PAOZZ
5	(Safety lanyard) Wire Rope Assembly	39428	30645T11	4010-01-G72-7647	2	PAOZZ

AD-6.11 REMOVE/REPLACE RAM-BALL ASSEMBLY

Refer to Figure AD-8.

NOTE

Ground straps are attached to components at one end (PU and DU) and a frame ground at the other end. Regardless of where the ground strap terminates, it is usually a burnished (void of paint) area. If the ground strap is removed from a burnished area, make sure to return it to the same burnished area. Where applicable, always connect the ground strap first when assembling, and disconnect the ground strap last when disassembling.

AD-6.11.1 REMOVE RAM-BALL ASSEMBLY

WARNING

Before conducting maintenance involving the removal and replacement of system components, ensure that all power to the FBCB2 system is off (including power from the vehicle). Failure to comply with warning may result in equipment damage or injury to personnel.

a. Power down AN/UYK-128(V) system IAW Operator's Manual TM 11-7010-326-10, or Pocket Guide TB 11-7010-326-10.

b. Remove DU IAW Unit Maintenance Manual TM 11-7010-326-20&P.

NOTE

Note cable routing and tie-wrap locations before removing cable or tie-wraps.

c. Remove tie-wraps securing W2 display cable and ground strap to DU isolation assembly using diagonal wire cutters.

d. Loosen RAM-Ball knob while supporting DU isolation assembly until RAM-Ball display base with ball can be lifted free of RAM-Ball socket arm

e. According to Figure AD-8, remove one wing nut (4), spacer (3), ground strap and square neck bolt (2) from DU isolation assembly (1) bottom plate and DU mount assembly.

f. Remove one wing nut (4), safety lanyard (5) spacer (3), and square neck bolt (2) from DU isolation assembly (1) bottom plate and DU mount assembly.

g. Remove the remaining two wing nuts (4), spacers (3) and square neck bolt (2) from DU isolation assembly (1) bottom plate and DU mount assembly.

h. Remove RAM-Ball socket arm from RAM-Ball mounting base with ball on display support bracket.

i. Remove one flat head screw (11), hex nut (8), safety Lanyard (5), lock washer (9) and flat washer (10) from RAM-Ball mounting base using a 7/16" open end wrench and No. 3 cross-tip screwdriver.

j. Remove the two remaining flat head screws (11), hex nuts (8), lock washers (9) and flat washers (10) from RAM-Ball mounting base using a 7/16" open end wrench and No. 3 cross-tip screwdriver.

k. Remove the RAM-Ball mounting base.

AD-6.11.2 REPLACE RAM-BALL ASSEMBLY

a. Obtain the RAM-Ball mounting base.

b. Align three holes in RAM-Ball mounting base with ball with display support bracket installation holes.

c. Install two flat head screws (11), flat washers (10), lock washers (9) and hex nuts (8) from RAM-Ball mounting base with ball and display support bracket using a 7/16” open end wrench and No. 3 cross-tip screwdriver.

d. Install the remaining one flat head screw (11), safety Lanyard (5), flat washers (10), lock washers (9) and hex nuts (8) from RAM-Ball mounting base with ball and display support bracket using a 7/16” open end wrench and No. 3 cross-tip screwdriver.

CAUTION

Ensure RAM-Ball is free of dirt and contaminants before reassembling. Failure to comply can result in slippage or excess wear of RAM-Ball assembly.

e. Inspect and clean RAM-Ball socket are, display and mounting base with ball, as necessary, using clean lint-free wipes.

f. Insert RAM-Ball display base with ball into RAM-Ball socket arm.

g. Install the DU Isolation plate by aligning the four holes in DU isolation assembly (1) bottom plate with DU mount assembly installation holes.

NOTE

To ensure positive ground, DU ground strap must make direct contact with bare metal. Ensure DU ground strap is installed in its original location at the DU isolation assembly bottom plate mounting hole. Slide a lock washer, flat washer and ground strap onto mounting screw before installing through the installation hole.

h. Install one wing nut (4), spacer (3), and square neck bolt (2) with the applicable ground strap to DU isolation assembly (1) bottom plate and DU mount assembly using a 7/16” socket with ratchet, 3” extension and a 7/16” open-end wrench.

i. Install one wing nut (4), safety lanyard (5), spacer (3), and square neck bolt (2) to DU isolation assembly (1) bottom plate and DU mount assembly using a 7/16” socket with ratchet, 3” extension and a 7/16” open-end wrench.

j. Install remaining two wing nuts (4), spacers (3), and square neck bolts (2) to DU isolation assembly (1) bottom plate and DU mount assembly using a 7/16” socket with ratchet, 3” extension and a 7/16” open-end wrench.

k. Adjust viewing angle and tighten RAM-Ball knob.

l. Secure W2 display cable and ground strap to DU isolation assembly using tie-wraps.

m. Dress tie-wraps using diagonal wire cutters.

n. Install DU IAW Unit Maintenance Manual TM 11-7010-326-20&P.

o. Perform Functional Check IAW paragraph AD-6.1.

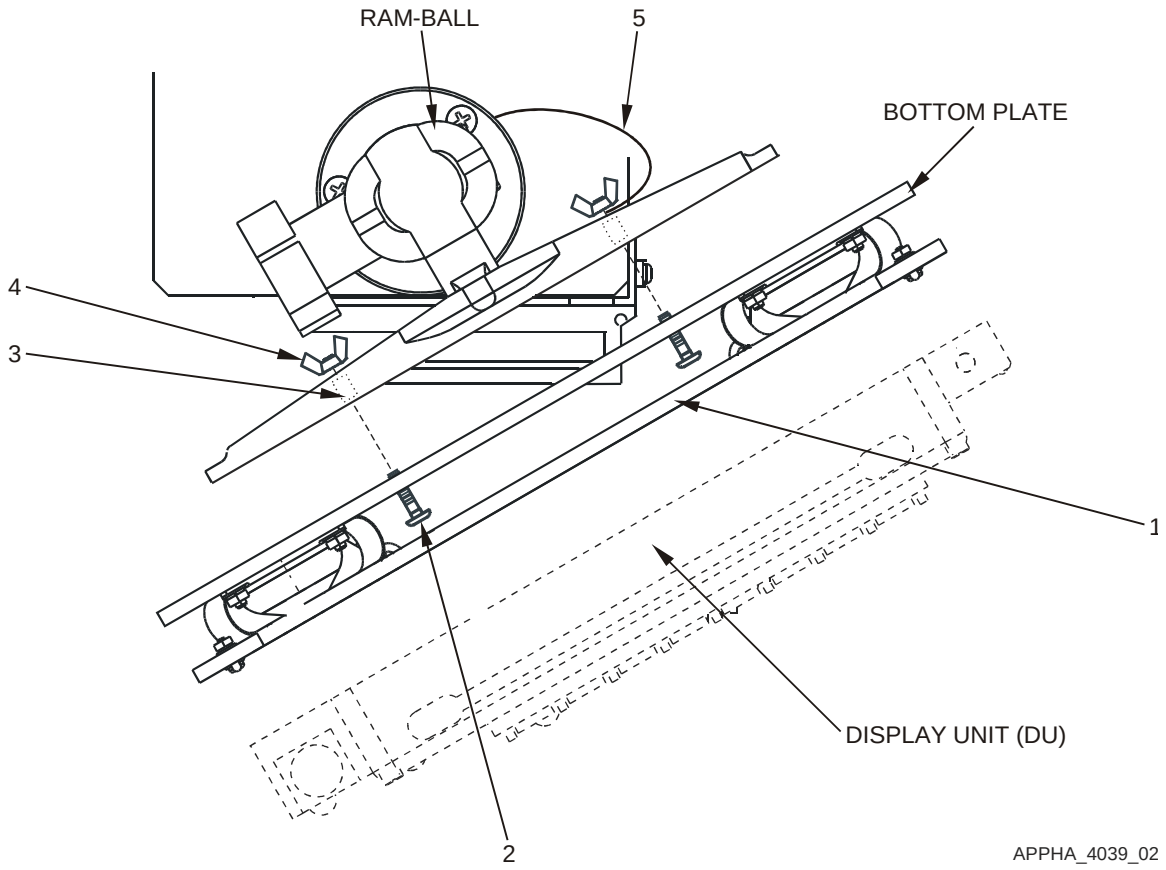

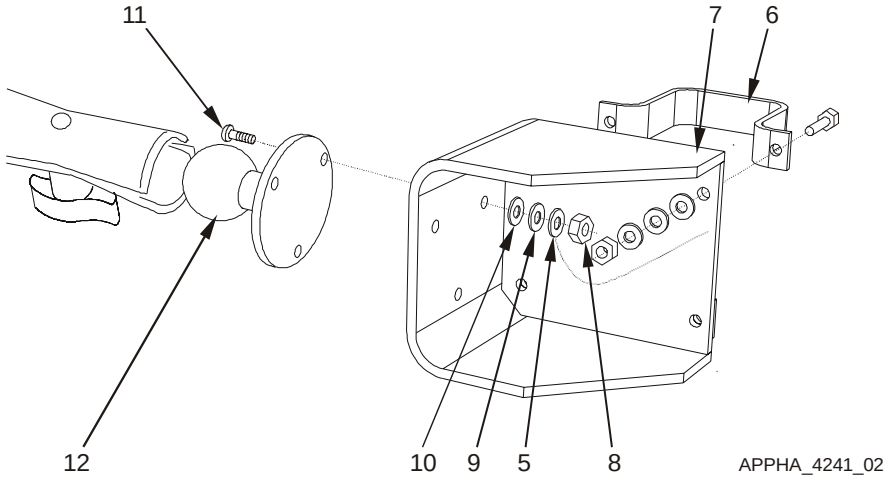

Figure AD-8. Remove and Replace RAM-Ball Assembly

Key and Parts List for Figure AD-8.

ITEM NO.	NOMENCLATURE	CAGE CODE	PART NUMBER	NSN	QTY	SMR
1	(DU isolation assembly) Plate, Resilient Mount DU	0J198	872870-1	5340-01-481-5757	1	PAODD
2	Bolt, Square Neck	96906	MS35751-17	5306-00-889-2943	4	PAOZZ
3	Spacer, Aluminum	57177	10705AL315C	5365-01-G72-7642	4	PAOZZ
4	Nut, Self-Locking, Wing	96906	MS51553-420	5310-01-384-2546	4	PAOZZ
5	(Safety lanyard) Wire Rope Assembly	39428	30645T11	4010-01-G72-7647	1	PAOZZ
6	Display Clamp	80212	881334-13		2	PAOZZ
7	Display Bracket	80212	881334-1		1	PAOZZ
8	Hex Nut	96906	MS35649-2252	5310-01-043-0520	7	PAOZZ
9	Washer, Lock	96906	MS35338-44	5310-00-582-5965	7	PAOZZ
10	Washer, Flat	96906	MS27183-10	5310-00-809-4058	7	PAOZZ
11	Flat Head Screw	96906	MS35190-291	5306-00-042-6921	3	PAOZZ
12	(RAM-Ball assembly) Mount, RAM-Ball	0J198	889489-1	5975-01-G72-7641	1	PAOZZ

AD-6.12 REMOVE/REPLACE DISPLAY BRACKET & CLAMP

Refer to Figure AD-9.

NOTE

Ground straps are attached to components at one end (PU and DU) and a frame ground at the other end. Regardless of where the ground strap terminates, it is usually a burnished (void of paint) area. If the ground strap is removed from a burnished area, make sure to return it to the same burnished area. Where applicable, always connect the ground strap first when assembling, and disconnect the ground strap last when disassembling.

AD-6.12.1 REMOVE DISPLAY BRACKET & CLAMP

WARNING

Before conducting maintenance involving the removal and replacement of system components, ensure that all power to the FBCB2 system is off (including power from the vehicle). Failure to comply with warning may result in equipment damage or injury to personnel.

a. Power down AN/UYK-128(V) system IAW Operator's Manual TM 11-7010-326-10, or Pocket Guide TB 11-7010-326-10.

b. Remove DU IAW Unit Maintenance Manual TM 11-7010-326-20&P.

NOTE

Note cable routing and tie-wrap locations before removing cable or tie-wraps.

c. Remove tie-wraps securing W2 display cable and ground strap to DU isolation assembly using diagonal wire cutters.

d. Loosen RAM-Ball knob while supporting DU isolation assembly until RAM-Ball display base with ball can be lifted free of RAM-Ball socket arm.

e. Stow RAM-Ball display base with ball and DU isolation assembly (1) bottom plate.

f. Remove RAM-Ball display base according to paragraph AD-6.11.1.

g. Carefully stow the Ram-Ball display base.

h. Remove the one hex-nut (6), lock washer (5), and flat washer (4), safety lanyard (8) and hex-head screw (3), from the bracket (2) and one Clamp (1) using a 7/16" socket with ratchet and 7/16" open end wrench.

i. Remove the remaining three hex-nuts (6), lock washers (5), flat washers (4) and hex-head screws (3) from the bracket (2) and two clamps (1) using a 7/16" socket with ratchet and 7/16" open end wrench

j. Carefully remove the two Display Clamps (1), and the Display Bracket (2).

AD-6.12.2 REPLACE DISPLAY BRACKET

a. As required obtain the two stowed or new display clamps (1), and the display bracket (2).

b. Align two holes in the display bracket (2) with the installation holes of the one display clamp (1).

c. Install the two hex-head screws (3), and safety lanyard (8), flat washers (4), lock washers (5) and hex-nuts (6), using a 7/16” open end wrench and 7/16” socket with ratchet.

d. Align the remaining two holes in the display bracket (2) with the installation holes of the remaining display clamp (1).

e. Install the remaining two hex-head screws (3), flat washers (4), lock washers (5) and hex-nuts (6) using a 7/16” open end wrench and 7/16” socket with ratchet.

f. Obtain the Ram-Ball display base with ball and DU isolation assembly bottom plate.

g. Install RAM-Ball display base according to paragraph AD-6.11.2.

CAUTION

Ensure RAM-Ball is free of dirt and contaminants before reassembling. Failure to comply can result in slippage or excess wear of RAM-Ball assembly.

h. Obtain the RAM-Ball socket arm from RAM-Ball mounting base with ball on display support bracket.

i. Inspect and clean RAM-Ball socket are, display and mounting base with ball, as necessary, using clean lint-free wipes.

j. Install RAM-Ball socket arm on RAM-Ball mounting base with ball according to paragraph AD-6.11.2.

k. Adjust viewing angle and tighten RAM-Ball knob.

l. Secure W2 display cable and ground strap to DU isolation assembly using tie-wraps.

m. Dress tie-wraps using diagonal wire cutters.

n. Install DU IAW Unit Maintenance Manual TM 11-7010-326-20&P.

o. Perform Functional Check IAW paragraph AD-6.1.

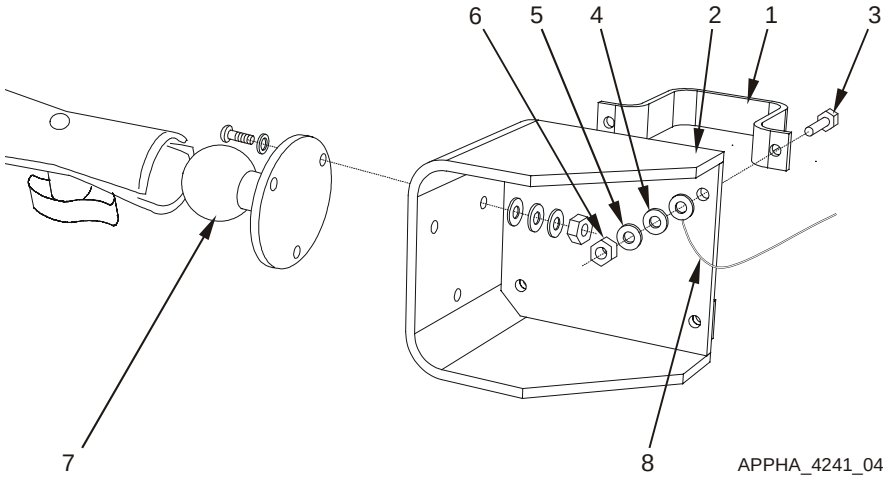

Figure AD-9. Remove and Replace Display Bracket & Clamp.

Key and Parts List for Figure AD-9.

ITEM NO.	NOMENCLATURE	CAGE CODE	PART NUMBER	NSN	QTY	SMR
1	Display Clamp	80212	881334-13		2	PAOZZ
2	Display Bracket	80212	881334-1		1	PAOZZ
3	Hex Screw	80204	B1821AH025C100N	5305-01-389-7984	4	PAOZZ
4	Washer, Flat	96906	MS27183-10	5310-00-809-4058	7	PAOZZ
5	Washer, Lock	96906	MS35338-44	5310-00-582-5965	7	PAOZZ
6	Hex Nut	96906	MS35649-2252	5310-01-043-0520	7	PAOZZ
7	(RAM-Ball assembly) Mount, RAM-Ball	0J198	889489-1	5975-01-G72-7641	1	PAOZZ
8	(Safety lanyard) Wire Rope Assembly	39428	30645T11	4010-01-G72-7647	1	PAOZZ

APPENDIX AE

SUPPLEMENTARY INFORMATION FOR

M1114 UP-ARMORED HMMWV

TABLE OF CONTENTS

		Page
AE–1	GENERAL	AE–3
AE–2	COMPONENT ITEM NUMBERS AND PART NUMBERS	AE–3
AE–3	SYSTEM INTERFACES	AE–3
	AE–3.1 MECHANICAL	AE–3
	AE–3.2 CABLE INTERFACES	AE–4
AE–4	COMPONENT LOCATION	AE–6
	AE–4.1 GENERAL LOCATION	AE–6
	AE–4.2 MOUNTING	AE–6
AE–5	PLATFORM-UNIQUE TROUBLESHOOTING	AE–8
AE–6	REMOVAL/REPLACEMENT IN THE PLATFORM	AE–8
	AE–6.1 FUNCTIONAL CHECK	AE–8
	AE–6.2 REMOVE/REPLACE W1 POWER CABLE	AE–9
	AE–6.3 REMOVE/REPLACE W2 DISPLAY CABLE	AE–10
	AE–6.4 REMOVE/REPLACE W3 SERIAL INTERFACE ADAPTER DEVICE (SIAD)	AE–12
	AE–6.5 REMOVE/REPLACE W3P PLGR CABLE	AE–14
	AE–6.6 REMOVE/REPLACE W3N INC CABLE	AE–15
	AE–6.7 REMOVE/REPLACE PU ISOLATION ASSEMBLY	AE–18
	AE–6.8 REMOVE/REPLACE DU ISOLATION ASSEMBLY	AE–21
	AE–6.9 REMOVE/REPLACE KEYBOARD UNIT (KU) STOWAGE BOX	AE–24
	AE–6.10 REMOVE/REPLACE RAM-BALL ASSEMBLY	AE–26
	AE–6.11 REMOVE/REPLACE AMPLIFIER AND FASTENER GUARD	AE–29

LIST OF ILLUSTRATIONS

Page
Figure AE-1. Equipment Interface Block Diagram AE–5
Figure AE-2. Relative Component Locations AE–6
Figure AE-3. Top-Down View of Integrated Rack Mounted Components AE–7
Figure AE-4. Cable Run AE–16
Figure AE-5. Remove and Replace PU Isolation Assembly AE–20
Figure AE-6. Remove and Replace DU Isolation Assembly AE–23
Figure AE-7. Remove and Replace Keyboard Unit (KU) Stowage Box AE–25
Figure AE-8. Remove and Replace RAM-Ball Assembly AE–28
Figure AE-9. Remove and Replace Amplifier and Fastener Guard AE–30

AE–1 GENERAL

This appendix describes the interfaces between the FBCB2 equipment and the M1114 Up-Armored HMMWV with integrated rack (rack). This appendix also identifies the component parts of the M1114 Up-Armored HMMWV platform installation kit and details the removal and replacement procedures particular to the M1114 Up-Armored HMMWV vehicles with integrated racks.

AE–2 COMPONENT ITEM NUMBERS AND PART NUMBERS

Key and Parts List tables contained in the Removal and Replacement section of this Appendix serve a dual purpose. Use the Item Numbers in the Key to identify components and attaching hardware shown in the Figures illustrating the tasks. The nomenclature and part number for the hardware and equipment mounting components of the installation kit also are keyed to the Item Numbers in the tables. Additional parts ordering information, such as Contractor and Government Entity code (CAGE); National Stock Number (NSN); quantity; and Source, Maintenance, and Recoverability (SMR) codes, are provided. The Key and Parts List tables follow the task illustrations.

AE–3 SYSTEM INTERFACES

AE–3.1 MECHANICAL

The mechanical hardware-to-hardware interfaces include:

a. Cables

b. Processor Unit (PU)

c. Display Unit (DU)

d. Keyboard Unit (KU)

AE–3.2 CABLE INTERFACES

Figure AE-1 illustrates a block diagram of the interfaces between FBCB2 equipment and the M1114 Up-Armored HMMWV (Platform). Figure AE-1 also illustrates the signal and control interfaces along with the terminal connector labels (e.g., P1, P2). The purpose of each cable is listed below:

Cable Name	Purpose
W1–Cable	Supplies vehicle power to the AN/UYK-128(V) computer and its subassemblies.
W2–Cable	Supplies power and signals to the Display Unit (DU) and Keyboard Unit (KU). Returns Man Machine Interface (MMI) information from the KU to the Processor Unit (PU).
W3–Cable	The Serial Interface Adapter Device (SIAD) is a conduit assembly that breaks out each of the serial interface ports to a connector.
W3P–Cable	Collects position and time information from the PLGR.
W3N–Cable	Provides duplex communication between the PU, Internet Controller (INC) and radios.
W4–Cable	Connects audio signals from the PU to the Intercom system and Combat Vehicle Crew (CVC) Helmet.
W5–Cable	The Expansion Interface Adapter Device (EIAD) is connected to the Universal Serial Bus (USB) connector only when this vehicle is to be used in a Tactical Operations Center (TOC) setup. When used in this configuration, it is connected between the PU J5 connector and local router.
Ground Strap	Provides safety ground for the PU.
Ground Strap	Provides safety ground for the DU.

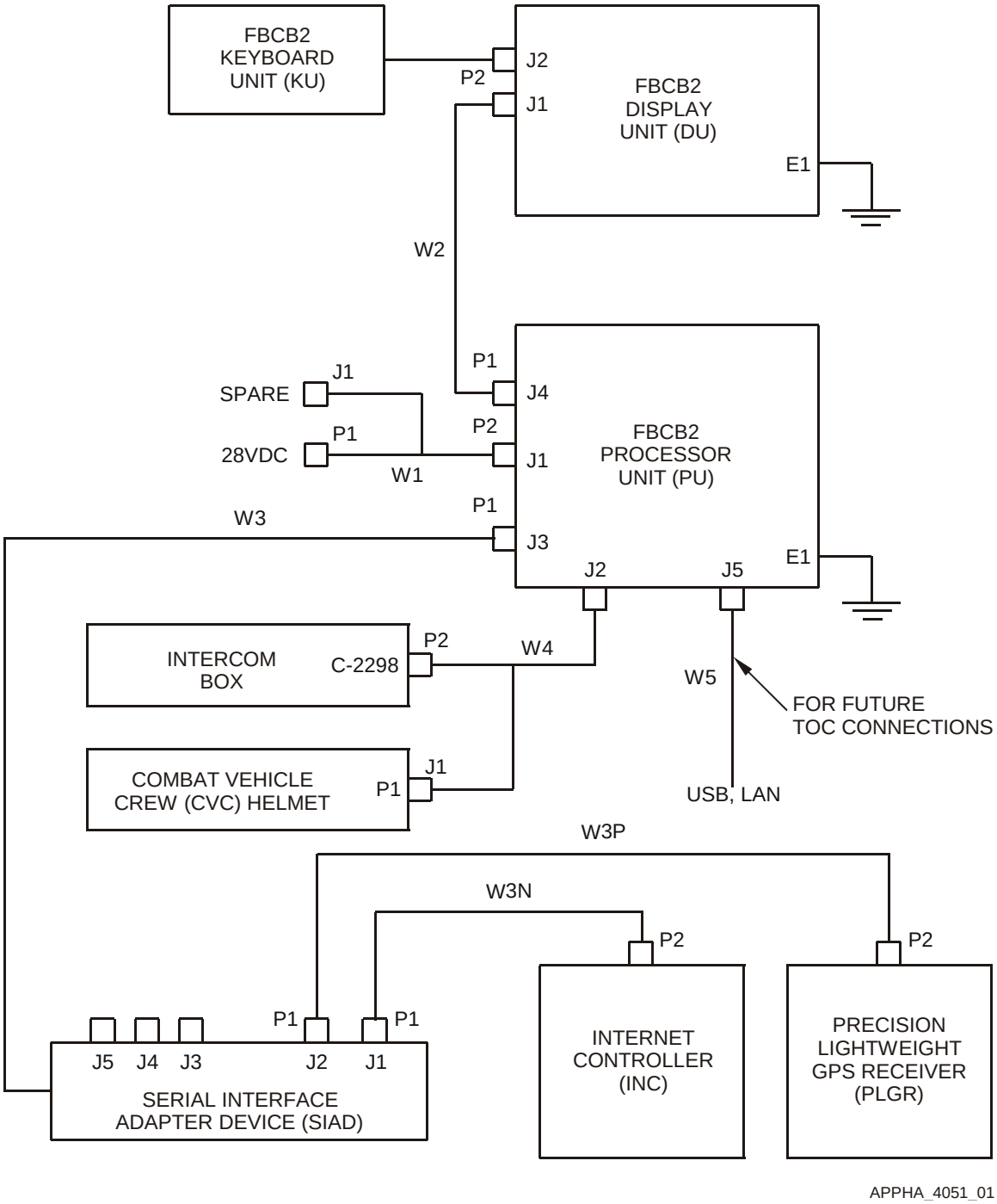

Figure AE-1. Equipment Interface Block Diagram

AE–4 COMPONENT LOCATION

AE–4.1 GENERAL LOCATION

Figure AE-2 shows the relative locations of the FBCB2 computer equipment and mounting components in the cab of the M1114 Up-Armored HMMWV vehicles.

AE–4.2 MOUNTING

The integrated rack containing most of the FBCB2 computer equipment is located between the driver and passenger, with the forward part of the rack against the dashboard. AN/UYK-128(V) equipment and the SINCGARS share this common rack. Refer to Figure AE-3 for a Top-Down view to help define the location and mounting methodology.

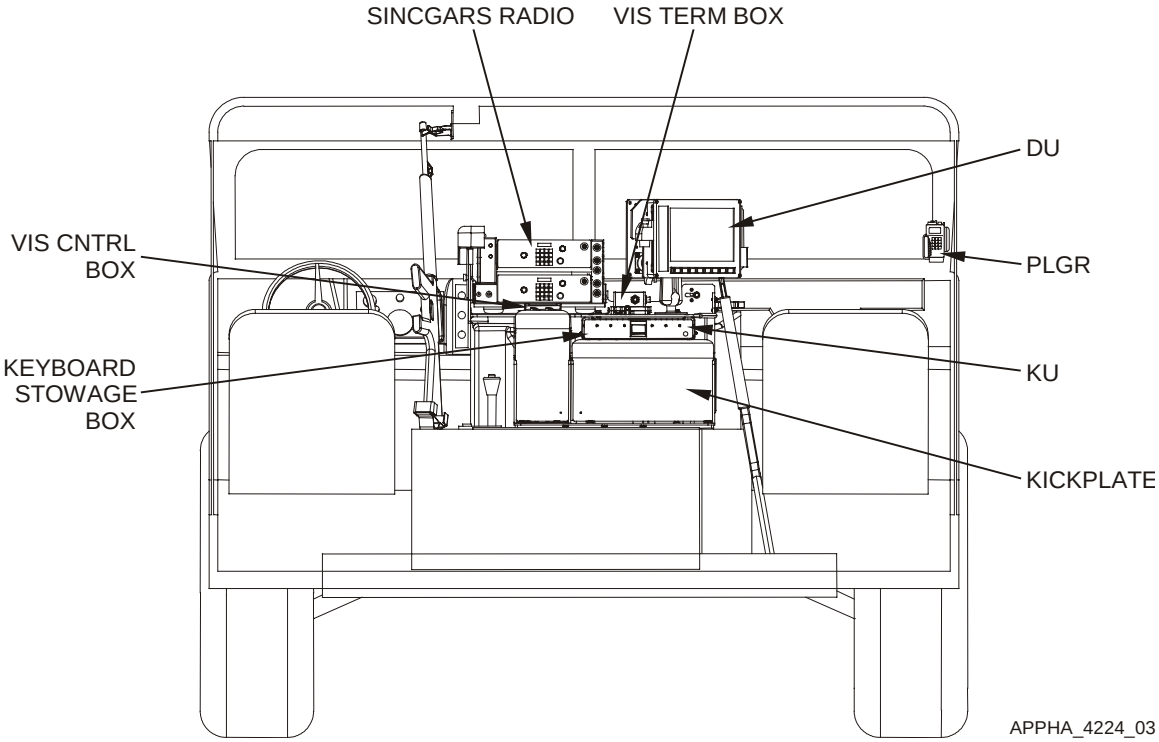

Figure AE-2. Relative Component Locations

AE–4.2.1 INTEGRATED RACK MOUNTING

Figure AE-3 illustrates a top-down view of the FBCB2 components mounted in the Integrated Rack.

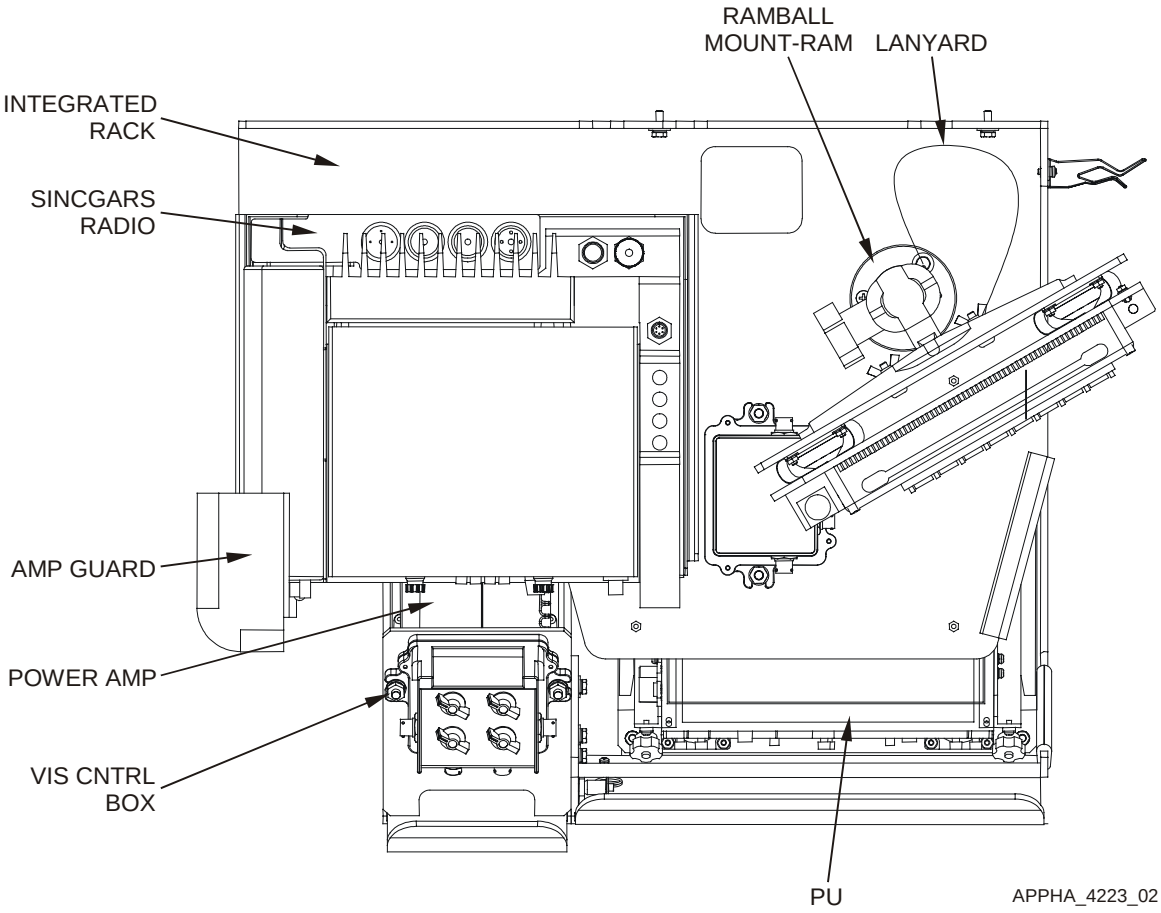

Figure AE-3. Top-Down View of Integrated Rack Mounted Components

AE–5 PLATFORM-UNIQUE TROUBLESHOOTING

There are no unique troubleshooting procedures for this vehicle.

AE–6 REMOVAL/REPLACEMENT IN THE PLATFORM

Most installations must be tailored to the platform. Cables and brackets are unique to the installation. Before a part or assembly is removed from a vehicle, fill out a “Maintenance Request” DA Form 2407. One copy of this completed form must remain with the vehicle and the remaining copies must be kept with the failed component. To prove the operability of the system after an item is replaced, perform the system Functional Check.

AE–6.1 FUNCTIONAL CHECK

AE–6.1.1 POWER UP

Power up and initialize all interface equipment and the AN/UYK-128(V) In Accordance With (IAW) the Operator’s Manual TM 11-7010-326-10, or Pocket Guide TB 11-7010-326-10.

AE–6.1.2 VERIFICATION

NOTE

Observe that the Display Unit PWR, DISP and CPU green LED lights are lit.

a. Observe that the PLGR synchronizes with PU, indicated by the PLGR dialog box showing green.

b. Observe that the Router synchronizes with the PU, indicated by the Router dialog box showing green.

c. At the Session Manager screen, select OPS button to display the OPS screen.

d. Verify the GPS status is either green or amber on the Classification/Status Bar.

e. Verify the Communications status is either green or amber on the Classification/Status Bar.

AE–6.1.3 POWER DOWN

Power down all interface equipment and the AN/UYK-128(V) IAW the Operator’s Manual TM 11-7010-326-10, or Pocket Guide TB 11-7010-326-10.

AE–6.2 REMOVE/REPLACE W1 POWER CABLE

Refer to Figure AE-4.

AE–6.2.1 REMOVE W1 POWER CABLE

WARNING

Before conducting maintenance involving the removal and replacement of system components, ensure that all power to the FBCB2 system is off (including power from the vehicle). Failure to comply with warning may result in equipment damage or injury to personnel.

a. Power down AN/UYK-128(V) system IAW Operator's Manual TM 11-7010-326-10, or Pocket Guide TB 11-7010-326-10.

b. Power down SINCGARS IAW TM 11-5820-890-10-8.

c. Unlatch and slide the Vehicle Amplifier-Adapter (VAA) AM-7239/VRC forward to access W1-P1 power cable connector.

d. Disconnect W1-P1 cable connector from the SINCGARS Mounting Base (MB) (MT-6352/VRC) A4-J2 connector.

e. Remove Retaining Pin and remove Kick Plate.

f. Disconnect W1-P2 cable connector from PU J1 connector.

g. Install protective cap on PU J1 connector.

h. Replace Kick Plate and install retaining pin.

NOTE

Note cable routing and tie-wrap locations before removing cable or tie-wraps.

i. Remove W1 power cable (1).

AE–6.2.2 REPLACE W1 POWER CABLE

a. Route W1 power cable (1).

b. Remove retaining pin and remove Kick Plate.

c. Remove protective cap from PU J1 connector.

d. Connect W1-P2 cable connector to PU J1 connector.

e. Replace Kick Plate and install retaining pin.

f. Connect W1-P1 cable connector to SINCGARS Mounting Base (MB) (MT-6352/VRC) A4-J2 connector.

g. Secure VAA, AM-7239/VRC in original mounting position on integrated rack.

h. Perform Functional Check IAW paragraph AE–6.1.

AE–6.3 REMOVE/REPLACE W2 DISPLAY CABLE

Refer to Figure AE-4.

AE–6.3.1 REMOVE W2 DISPLAY CABLE

WARNING

Before conducting maintenance involving the removal and replacement of system components, ensure that all power to the FBCB2 system is off (including power from the vehicle). Failure to comply with warning may result in equipment damage or injury to personnel.

a. Power down AN/UYK-128(V) system IAW Operator's Manual TM 11-7010-326-10, or Pocket Guide TB 11-7010-326-10.

b. Remove Retaining Pin and remove Kick Plate.

c. Disconnect W2-P1 cable connector from PU J4 connector.

d. Install protective cap on PU J4 connector.

e. Replace Kick Plate and install retaining pin.

f. Disconnect W2-P2 cable connector from display J1 connector.

g. Install protective cap on display J1 connector.

NOTE

Note cable routing and tie-wrap locations before removing cable or tie-wraps.

h. Remove tie-wraps from W2 cable and ground strap using diagonal wire cutters.

NOTE

The DU ground strap may be wrapped around the W2 Display cable. If necessary, remove the ground strap from DU E1 CHAS ground stud to unwrap the ground strap from the W2 cable.

i. Disconnect ground strap from DU E1 CHAS ground stud, if necessary.

j. Remove W2 display cable (5).

AE–6.3.2 REPLACE W2 DISPLAY CABLE

a. Route W2 display cable (5).

b. Remove protective cap from display J1 connector.

c. Connect W2-P2 cable connector to display J1 connector.

d. Remove Retaining Pin and remove Kick Plate.

e. Remove protective cap from PU J4 connector.

f. Connect W2-P1 cable connector to PU J4 connector.

g. Replace Kick Plate and install retaining pin.

NOTE

To take up slack, the ground strap may be wrapped around the W2 cable before connecting it to E1 CHAS ground stud.

h. Connect ground strap to DU E1 CHAS ground stud, if removed.

i. Secure W2 cable and ground strap to DU isolation assembly using tie-wraps.

j. Dress tie-wraps using diagonal wire cutters.

k. Perform Functional Check IAW paragraph AE–6.1.

AE–6.4 REMOVE/REPLACE W3 SERIAL INTERFACE ADAPTER DEVICE (SIAD)

Refer to Figure AE-4.

AE–6.4.1 REMOVE W3 SERIAL INTERFACE ADAPTER DEVICE (SIAD)

WARNING

Before conducting maintenance involving the removal and replacement of system components, ensure that all power to the FBCB2 system is off (including power from the vehicle). Failure to comply with warning may result in equipment damage or injury to personnel.

a. Power down AN/UYK-128(V) system IAW Operator's Manual TM 11-7010-326-10, or Pocket Guide TB 11-7010-326-10.

b. Remove Retaining Pin and remove Kick Plate.

c. Remove W1-P1, W2-P1, W3-P1, and W4-P1 cable connectors from PU.

d. Loosen PU ratchet nuts.

e. Slide PU out.

f. Disconnect W3N-P1 cable connector from W3 SIAD J1 connector.

g. Disconnect W3P-P1 cable connector from W3 SIAD J2 connector.

h. Install protective caps on all PU connectors.

i. Remove two pan head screws (6), lock washer (7), and flat washer (8).

NOTE

Note cable routing and tie-wrap locations before removing cable or tie-wraps.

j. Remove W3 SIAD (3).

k. Slide PU into place.

l. Tighten PU ratchet nuts.

m. Replace Kick Plate and install retaining pin.

AE–6.4.2 REPLACE W3 SERIAL INTERFACE ADAPTER DEVICE (SIAD)

a. Obtain the replacement W3 Serial Interface Adapter Device (SIAD).

b. Remove Retaining Pin and remove Kick Plate.

c. Loosen PU ratchet nuts.

d. Slide PU out.

e. Route W3 SIAD (3) into original position.

f. Align the SIAD connector with the mounting holes in the Integrated Rack.

g. Install two pan head screws (6), lock washer (7), and flat washer (8).

h. Remove protective caps on all PU connectors

i. Connect W3P-P1 cable connector to W3 SIAD J2 connector.

j. Connect W3N-P1 cable connector to W3 SIAD J1 connector.

AE–6.4.2 REPLACE W3 SERIAL INTERFACE ADAPTER DEVICE (SIAD) (Continued)

k. Install W1-P1, W2-P1, W3-P1, and W4-P1 cable connectors to PU.

l. Replace Kick Plate and install retaining pin.

m. Secure W3 SIAD using tie-wraps.

n. Dress tie-wraps using diagonal wire cutters.

o. Perform Functional Check IAW paragraph AE–6.1.

AE–6.5 REMOVE/REPLACE W3P PLGR CABLE

Refer to Figure AE-4.

AE–6.5.1 REMOVE W3P PLGR CABLE

WARNING

Before conducting maintenance involving the removal and replacement of system components, ensure that all power to the FBCB2 system is off (including power from the vehicle). Failure to comply with warning may result in equipment damage or injury to personnel.

a. Power down AN/UYK-128(V) system IAW Operator's Manual TM 11-7010-326-10, or Pocket Guide TB 11-7010-326-10.

b. Disconnect W3P-P1 cable connector from W3 SIAD J2 connector.

c. Remove PLGR from mount.

d. Disconnect W3P-P2 cable connector from PLGR J2 connector using offset flat screwdriver.

NOTE

Note cable routing and tie-wrap locations before removing cable or tie-wraps.

e. Remove tie-wraps securing W3P cable using diagonal wire cutters, if applicable.

f. Remove W3P cable (2).

AE–6.5.2 REPLACE W3P PLGR CABLE

a. Route W3P cable (2).

b. Connect W3P-P2 cable connector to PLGR J2 connector using offset flat screwdriver.

c. Install PLGR in mount.

d. Connect W3P-P1 cable connector to W3 SIAD J2 connector.

e. Secure W3P cable using tie-wraps, if applicable.

f. Dress tie-wraps using diagonal wire cutters, if applicable.

g. Perform Functional Check IAW paragraph AE–6.1.

AE–6.6 REMOVE/REPLACE W3N INC CABLE

Refer to Figure AE-4.

AE–6.6.1 REMOVE W3N INC CABLE

WARNING

Before conducting maintenance involving the removal and replacement of system components, ensure that all power to the FBCB2 system is off (including power from the vehicle). Failure to comply with warning may result in equipment damage or injury to personnel.

a. Power down AN/UYK-128(V) system IAW Operator's Manual TM 11-7010-326-10, or Pocket Guide TB 11-7010-326-10.

b. Disconnect W3N-P1 cable connector from W3 SIAD J1 connector.

c. Disconnect W3N-P2 cable connector from SINCGARS INC J6 connector.

NOTE

Note cable routing and tie-wrap locations before removing cable or tie-wraps.

d. Remove W3N cable (4).

AE–6.6.2 REPLACE W3N INC CABLE

a. Route W3N cable (4).

b. Connect W3N-P2 cable connector to SINCGARS INC J6 connector.

c. Connect W3N-P1 cable connector to W3 SIAD J1 connector.

d. Route W3N cable.

e. Perform Functional Check IAW paragraph AE–6.1.

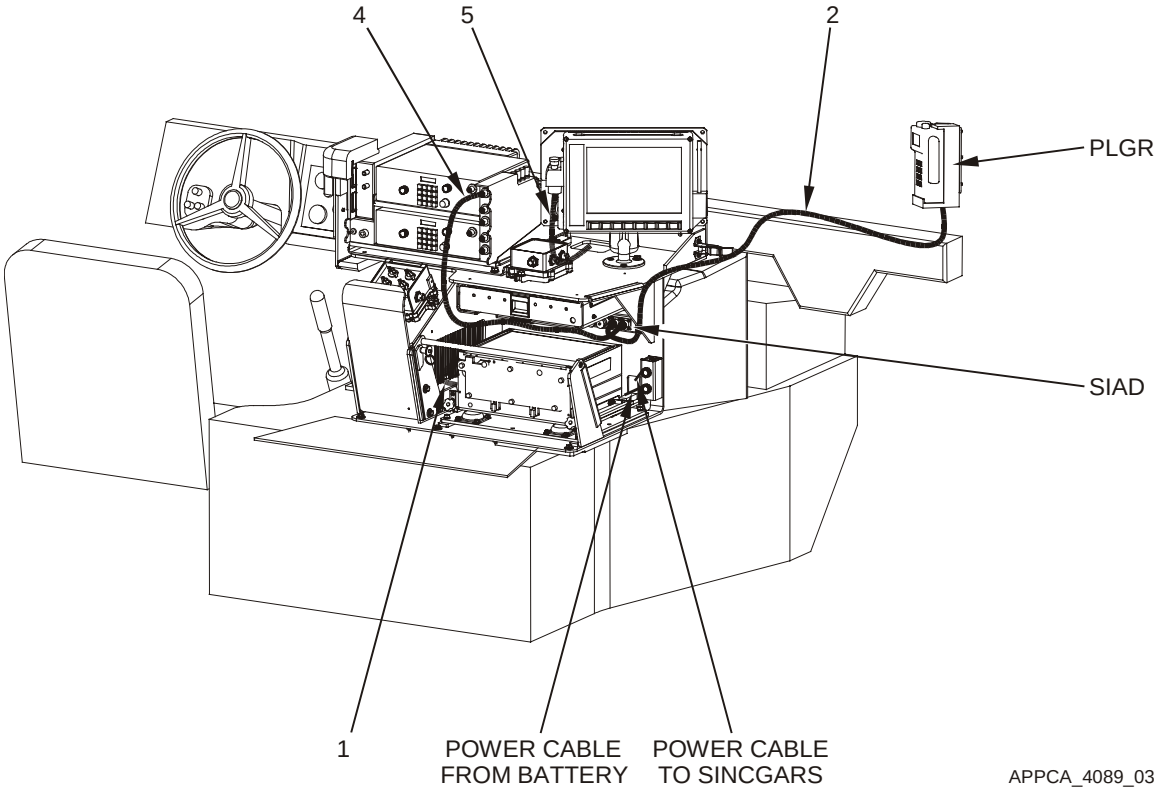

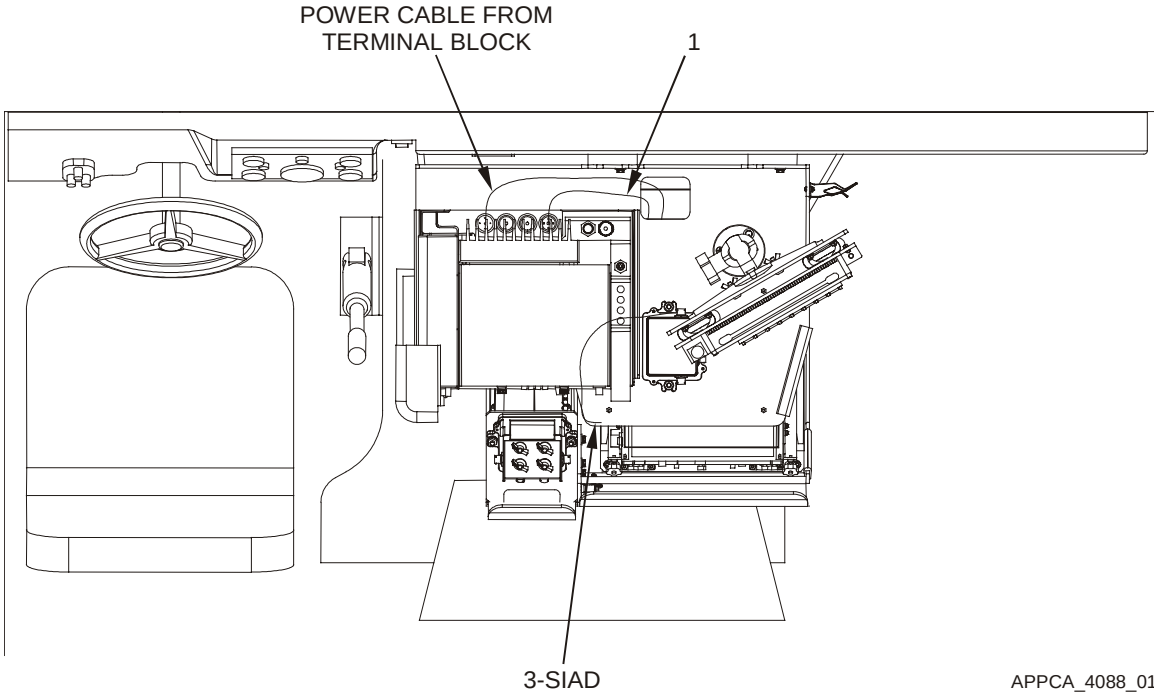

Figure AE-4. Cable Run

Key and Parts List for Figure AE-4.

ITEM NO.	NOMENCLATURE	CAGE CODE	PART NUMBER	NSN	QTY	SMR
1	Cable Assembly W1	0J198	866003-3	5995-01-478-4908	1	PAODD
2	Cable Assembly W3P	0J198	881335-2	5995-01-478-4893	1	PAODD
3	Adapter Assy SIAD W3	0J198	881331-1	4920-01-478-3722	1	PAODD
4	Cable Assembly W3N	0J198	881336-1	5995-01-478-4913	1	PAODD
5	Cable Assembly W2	0J198	881327-1	5995-01-478-4876	1	PAODD
--	Strap, Tie Down, Elect	39428	7130K31		25	PAOZZ
--	Holder, Cable, Tie 2w	39428	7566K27		25	PAOZZ
6	Screw, Pan Head	96906	B1821AH025C100N	5305-01-389-7984	1	PAOZZ
7	Washer, Lock	96906	MS35338-44	5310-00-582-5965	3	PAOZZ
8	Washer, Flat	96906	MS27183-10	5310-00-809-4058	3	PAOZZ

AE–6.7 REMOVE/REPLACE PU ISOLATION ASSEMBLY

Refer to Figure AE-5.

NOTE

Ground straps are attached to components at one end (PU and DU) and a frame ground at the other end. Regardless of where the ground strap terminates, it is usually a burnished (void of paint) area. If the ground strap is removed from a burnished area, make sure to return it to the same burnished area. Where applicable, always connect the ground strap first when assembling, and disconnect the ground strap last when disassembling.

AE–6.7.1 REMOVE PU ISOLATION ASSEMBLY

WARNING

Before conducting maintenance involving the removal and replacement of system components, ensure that all power to the FBCB2 system is off (including power from the vehicle). Failure to comply with warning may result in equipment damage or injury to personnel.

a. Power down AN/UYK-128(V) system IAW Operator's Manual TM 11-7010-326-10, or Pocket Guide TB 11-7010-326-10.

NOTE

Do not remove the Removable Hard Disk Drive Cartridge (RHDDC), locking bracket, or thermal guard (if installed) from PU.

b. Remove Retaining Pin and remove Kick Plate.

c. Remove PU IAW Unit Maintenance Manual TM 11-7010-326-20&P.

d. Remove one plain hex nut (2), lock washer (3), flat washer (4) and ground strap from PU isolation assembly (1) bottom plate using 7/16" socket with ratchet and 3" extension.

e. Remove remaining three plain hex nuts (2), lock washers (3) and flat washers (4) from PU isolation assembly (1) bottom plate using 7/16" socket with ratchet and 3" extension.

f. Remove PU isolation assembly (1) from rack, which has four threaded studs aligning the assembly on the rack.

g. Replace Kick Plate and install retaining pin.

AE–6.7.2 REPLACE PU ISOLATION ASSEMBLY

a. Obtain the replacement PU Isolation Assembly.

b. Remove Retaining Pin and remove Kick Plate.

c. Align four PU isolation assembly (1) bottom plate holes with installation threaded studs in mounting rack.

NOTE

To ensure positive ground, PU ground strap must make direct contact with bare metal. Ensure PU ground strap is installed in its original location at the PU isolation assembly bottom plate mounting hole. Slip the ground strap, flat washer and lock washer on the mounting screw before installing and tightening hex nut.

d. Install one plain hex nut (2), lock washer (3), flat washer (4) and ground strap on PU isolation assembly (1) bottom plate using 7/16” socket with ratchet and 3” extension.

e. Install remaining three plain hex nuts (2), lock washers (3) and flat washers (4) using 7/16” socket with ratchet and 3” extension.

f. Install PU IAW Unit Maintenance Manual TM 11-7010-326-20&P.

g. Replace Kick Plate and install retaining pin.

h. Perform Functional Check IAW paragraph AE–6.1.

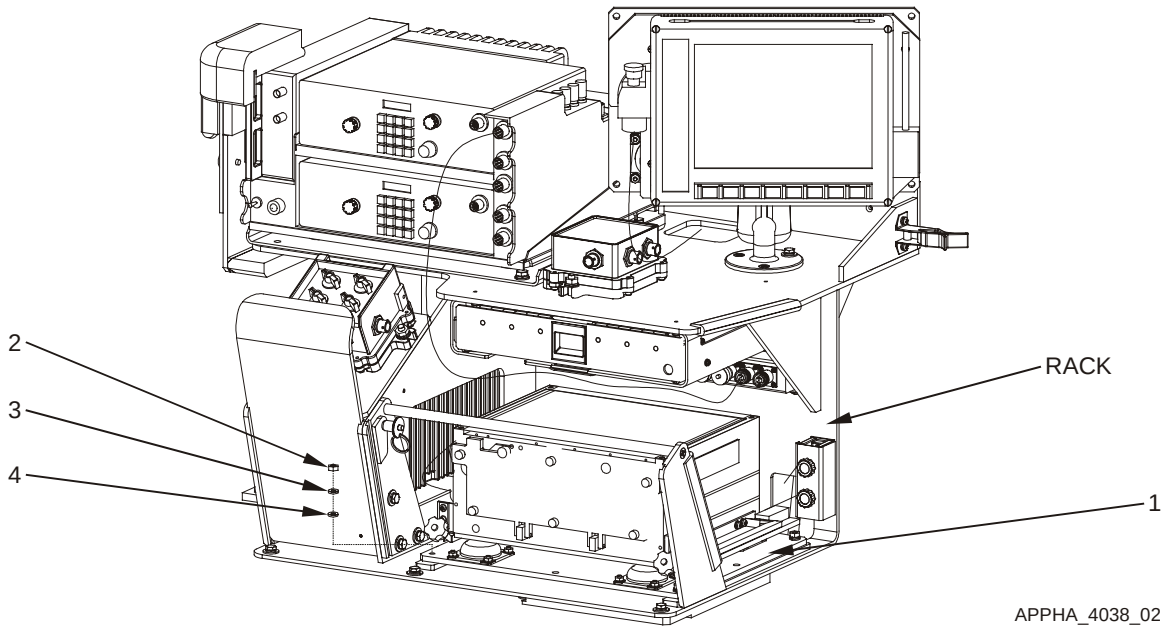

Figure AE-5. Remove and Replace PU Isolation Assembly

Key and Parts List for Figure AE-5.

ITEM NO.	NOMENCLATURE	CAGE CODE	PART NUMBER	NSN	QTY	SMR
1	(PU isolation assembly) Plate, Resilient Mount PU	0J198	872826-2	5340-01-481-5742	1	PAODD
2	Nut, Plain, Hexagon	80204	MS35649-2252	5310-00-997-1888	4	PAOZZ
3	Washer, Lock	96906	MS35338-44	5310-00-582-5965	4	PAOZZ
4	Washer, Flat	96906	MS27183-10	5310-00-809-4058	4	PAOZZ
--	Assembly, PU Lock	0J198	861865-1	5340-01-G72-7627	1	XBOOO
--	Bracket, Locking	0J198	861871-1	5340-01-G72-7628	1	PAOZZ
--	Screw	80205	MS35190-253	5305-00-059-4568	2	PAOZZ
--	Guard, Fastener	0J198	881328-1	9530-01-G72-7796	1	PAOZZ
--	Thermal Guard Assy (if installed)	0J198	872860-1	5999-01-G72-7670	1	XBOOO
--	Thermal Guard	0J198	872860-11	5999-01-G72-7671	1	PAOZZ
--	Screw, Machine	96906	MS51958-63	5305-00-059-3659	4	PAOZZ
--	Grommet	63590	BG2903	5325-01-291-3383	4	PAOZZ
--	Retainer, Bolt	032U6	75-4119	5325-01-G72-7672	4	PAOZZ

AE–6.8 REMOVE/REPLACE DU ISOLATION ASSEMBLY

Refer to Figure AE-6.

NOTE

Ground straps are attached to components at one end (PU and DU) and a frame ground at the other end. Regardless of where the ground strap terminates, it is usually a burnished (void of paint) area. If the ground strap is removed from a burnished area, make sure to return it to the same burnished area. Where applicable, always connect the ground strap first when assembling, and disconnect the ground strap last when disassembling.

AE–6.8.1 REMOVE DU ISOLATION ASSEMBLY

WARNING

Before conducting maintenance involving the removal and replacement of system components, ensure that all power to the FBCB2 system is off (including power from the vehicle). Failure to comply with warning may result in equipment damage or injury to personnel.

a. Power down AN/UYK-128(V) system IAW, Operator's Manual TM 11-7010-326-10, or Pocket Guide TB 11-7010-326-10.

b. Remove DU IAW Unit Maintenance Manual TM 11-7010-326-20&P.

NOTE

Note cable routing and tie-wrap locations before removing cable or tie-wraps.

c. Remove tie-wraps securing W2 display cable and ground strap to DU isolation assembly using diagonal wire cutters.

d. Loosen RAM-Ball knob while supporting DU isolation assembly (1) until RAM-Ball display base with ball can be lifted free of RAM-Ball socket arm.

e. Remove one self-locking wing nut (4), safety lanyard (5), spacer (3) and square neck bolt (2) from RAM-Ball display base with ball and DU isolation assembly (1) bottom plate.

f. Remove remaining three self-locking wing nuts (4), spacers (3) and square neck bolts (2) from RAM-Ball display base with ball and DU isolation assembly (1) bottom plate.

g. Remove DU isolation assembly (1) from RAM-Ball display base with ball.

AE–6.8.2 REPLACE DU ISOLATION ASSEMBLY

a. Align four RAM-Ball display base installation holes with slots in the DU isolation assembly (1) bottom plate.

b. Install three square neck bolts (2), spacers (3) and self-locking wing nuts (4) on RAM-Ball display base with ball and DU isolation assembly (1) bottom plate.

c. Install one remaining square neck bolts (2), safety lanyard (5), spacer (3) and self locking wing nut (6) from RAM-Ball display base with ball and DU isolation assembly (1) bottom plate.

CAUTION

Ensure RAM-Ball is free of dirt and contaminants before reassembling. Failure to comply can result in slippage or excess wear of RAM-Ball assembly.

d. Inspect and clean RAM-Ball socket arm and display base with ball, as necessary, using clean lint-free wipes.

e. Insert RAM-Ball display base with ball into RAM-Ball socket arm.

f. Adjust viewing angle and tighten RAM-Ball knob.

g. Secure W2 display cable and ground strap to DU isolation assembly (1) bottom plate using tie-wraps.

h. Dress tie-wrap using diagonal wire cutters.

i. Install DU IAW Unit Maintenance Manual TM 11-7010-326-20&P.

j. Perform Functional Check IAW paragraph AE–6.1.

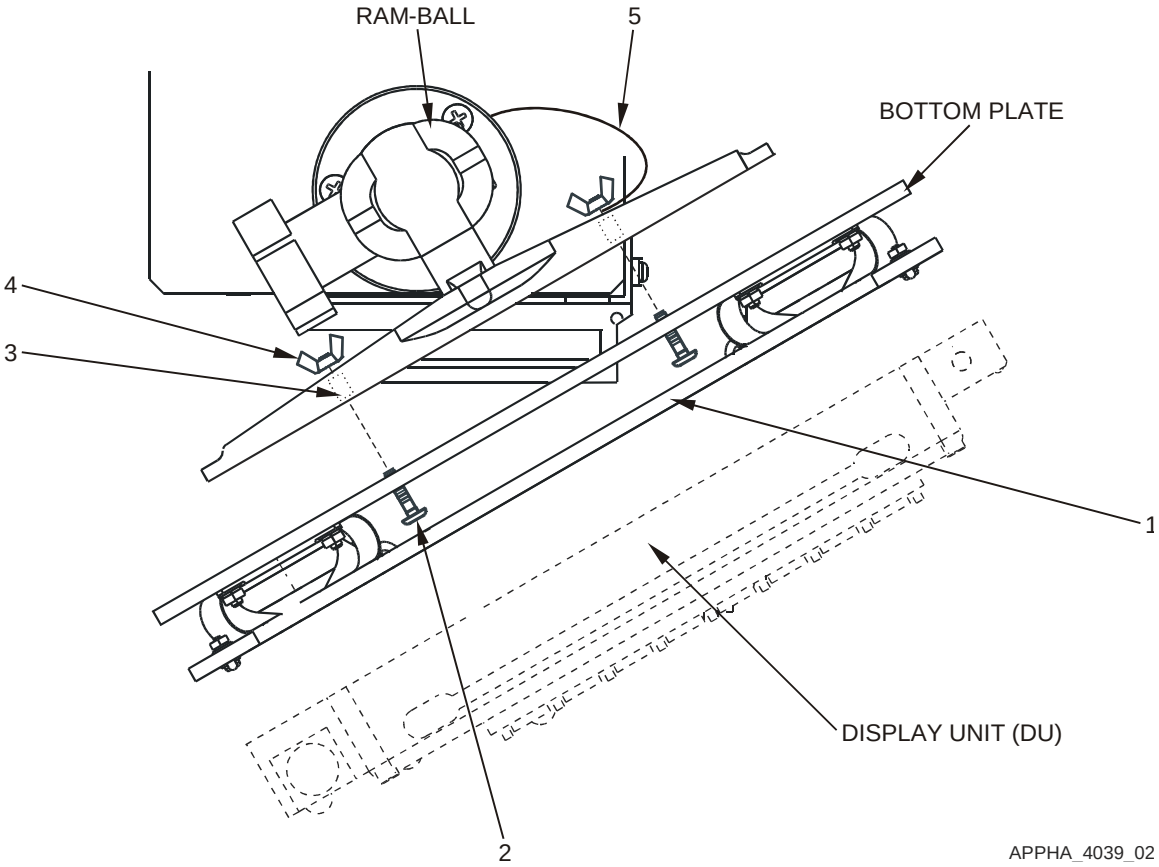

Figure AE-6. Remove and Replace DU Isolation Assembly

Key and Parts List for Figure AE-6.

ITEM NO.	NOMENCLATURE	CAGE CODE	PART NUMBER	NSN	QTY	SMR
1	(DU isolation assembly) Plate, Resilient Mount DU	0J198	872870-1	5340-01-481-5757	1	PAODD
2	Bolt, Square Neck	96906	MS35751-17	5306-00-889-2943	4	PAOZZ
3	Spacer, Aluminum	57177	10705AL315C	5365-01-G72-7642	4	PAOZZ
4	Nut, Self-Locking, Wing	96906	MS51553-420	5310-01-384-2546	4	PAOZZ
5	(Safety lanyard) Wire Rope Assembly	39428	8925T5-7X19-1/8 Bare Rope		1	PAOZZ
--	Strap, Tie Down, Elect	39428	7130K31	5975-01-G72-7634	6	PAOZZ
--	Assembly, DU Lock	0J198	872843-1	5340-01-G72-7629	1	XBOOO
--	Bracket, Locking	0J198	861871-3	5340-01-G72-7630	1	XBOZZ
--	Washer, Lock	96906	MS35338-42	5310-00-045-3299	2	PAOZZ
--	Screw	80205	MS35190-253	5305-00-059-4568	2	PAOZZ

AE–6.9 REMOVE/REPLACE KEYBOARD UNIT (KU) STOWAGE BOX

Refer to Figure AE-7.

AE–6.9.1 REMOVE KEYBOARD UNIT (KU) STOWAGE BOX

WARNING

Before conducting maintenance involving the removal and replacement of system components, ensure that all power to the FBCB2 system is off (including power from the vehicle). Failure to comply with warning may result in equipment damage or injury to personnel.

a. Power down AN/UYK-128(V) system IAW Operator's Manual TM 11-7010-326-10, or Pocket Guide TB 11-7010-326-10.

NOTE

Do not remove the Removable Hard Disk Drive Cartridge (RHDDC), locking bracket, or thermal guard (if installed) from PU.

b. Remove Retaining Pin and remove Kick Plate.

c. Remove PU IAW Unit Maintenance Manual TM 11-7010-326-20&P.

d. Remove keyboard from stowage box, if stowed.

e. Loosen four KU stowage box captive screws (2) until captive screws move freely using a No. 2 cross-tip screwdriver.

f. Remove KU stowage box (3) from mounting bracket.

AE–6.9.2 REPLACE KEYBOARD UNIT (KU) STOWAGE BOX

a. Obtain the replacement KU Stowage Box.

b. Align four KU stowage box captive screws (2) with mounting bracket installation holes.

c. Tighten four captive screws using a No. 2 cross-tip screwdriver.

d. Stow keyboard, if necessary.

e. Install PU IAW Unit Maintenance Manual TM 11-7010-326-20&P.

f. Replace Kick Plate and install retaining pin.

g. Perform Functional Check IAW paragraph AE–6.1.

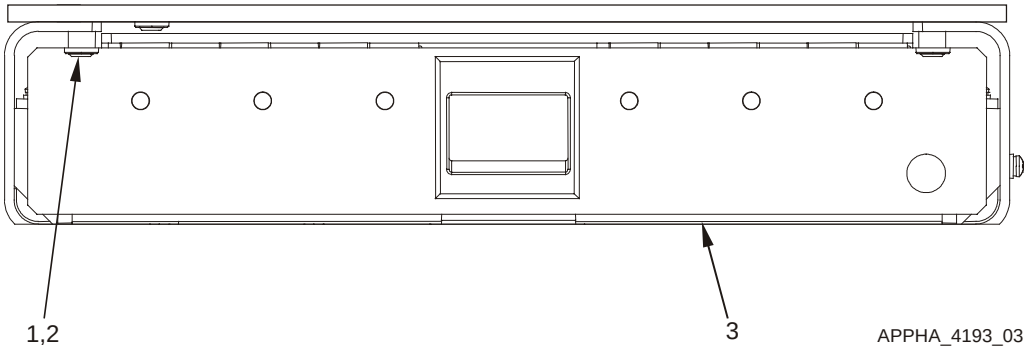

Figure AE-7. Remove and Replace Keyboard Unit (KU) Stowage Box

Key and Parts List for Figure AE-7.

ITEM NO.	NOMENCLATURE	CAGE CODE	PART NUMBER	NSN	QTY	SMR
1	Retainer, Panel Screw	57177	214-03SS10-32		4	PAOZZ
2	Screw, Captive Panel	57177	PH207-05SS1032		4	PAOZZ
3	Box, Stowage, Keyboard	0J198	872845-1	2540-01-481-5744	1	PAODD
	Case, Keyboard	0J198	872845-11		1	XBOOO
	Bottom, Stowage Box	0J198	872845-12		1	XBOOO
	Side rail, KB Box	0J198	872845-13		1	XBOOO
	Side rail, KB Box	0J198	872845-14		1	XBOOO
	Door, Keyboard Box	0J198	872845-15		1	XBOOO
	Hinge, Keyboard Box	0J198	872845-16		1	XBOOO
	Strip, Rubber	0J198	872845-17		1	XBOOO
	Rivet, Solid, CSK	96906	MS20426AD4-5	5320-00-117-6950	6	PAOZZ
	Label, KB Box	0J198	881323-1		1	PAOZZ
	Nut, Plain Hexagon	96906	MS35649-262	5310-00-934-9747	3	PAOZZ

AE–6.10 REMOVE/REPLACE RAM-BALL ASSEMBLY

Refer to Figure AE-8.

NOTE

Ground straps are attached to components at one end (PU and DU) and a frame ground at the other end. Regardless of where the ground strap terminates, it is usually a burnished (void of paint) area. If the ground strap is removed from a burnished area, make sure to return it to the same burnished area. Where applicable, always connect the ground strap first when assembling, and disconnect the ground strap last when disassembling.

AE–6.10.1 REMOVE RAM-BALL ASSEMBLY

WARNING

Before conducting maintenance involving the removal and replacement of system components, ensure that all power to the FBCB2 system is off (including power from the vehicle). Failure to comply with warning may result in equipment damage or injury to personnel.

a. Power down AN/UYK-128(V) system IAW Operator's Manual TM 11-7010-326-10, or Pocket Guide TB 11-7010-326-10.

b. Remove DU IAW Unit Maintenance Manual TM 11-7010-326-20&P.

NOTE

Note cable routing and tie-wrap locations before removing cable or tie-wraps.

c. Remove tie-wraps securing W2 display cable and ground strap to DU isolation assembly using diagonal wire cutters.

d. Loosen RAM-Ball knob while supporting DU isolation assembly until RAM-Ball display base with ball can be lifted free of RAM-Ball socket arm

e. Remove four self-locking wing nuts (9), spacers (8) and square neck bolts (7) from Ram-Ball display base with ball and DU isolation assembly bottom plate.

f. Remove RAM-Ball socket arm from RAM-Ball mounting base with ball on display support bracket.

g. Remove one Hex Head Screw (2), safety lanyard (3), flat washer (4), lock washer (5) and hex nut (6) from the RAM-Ball mounting base with ball and display support bracket using a 7/16" open end wrench and No. 3 cross-tip screwdriver.

h. Remove two Flat Head Screws (10) and two hex nuts (6) from RAM-Ball mounting base with ball and display support bracket wrench using a 7/16" open end wrench and No. 3 cross-tip screwdriver.

AE–6.10.2 REPLACE RAM-BALL ASSEMBLY

a. Obtain the replacement RAM-Ball Assembly.

b. Align three holes in RAM-Ball mounting base with ball with display support bracket installation holes.

c. Install two Flat Head Screws (10) and two hex nuts (6) into RAM-Ball mounting base with ball and display support bracket using a 7/16” open end wrench and No. 3 cross-tip screwdriver.

d. Install one Hex Head Screw (2), safety lanyard (3), flat washer (4), lock washer (5) and hex nut (6) into the RAM-Ball mounting base with ball and display support bracket using a 7/16” open end wrench and No. 3 cross-tip screwdriver.

CAUTION

Ensure RAM-Ball is free of dirt and contaminants before reassembling. Failure to comply can result in slippage or excess wear of RAM-Ball assembly.

e. Inspect and clean RAM-Ball socket are, display and mounting base with ball, as necessary, using clean lint-free wipes.

f. Install RAM-Ball socket arm on RAM-Ball mounting base with ball.

g. Align four holes in RAM-Ball display base with ball with slots in DU isolation assembly bottom plate.

h. Install four square neck bolts (7), spacers (8) and self-locking wing nuts (9) on Ram-Ball display base with ball and DU isolation assembly bottom plate.

i. Insert RAM-Ball display base with ball into RAM-Ball socket arm.

j. Adjust viewing angle and tighten RAM-Ball knob.

k. Install DU IAW Unit Maintenance Manual TM 11-7010-326-20&P.

l. Secure W2 display cable and ground strap to DU isolation assembly using tie-wraps.

m. Dress tie-wraps using diagonal wire cutters.

n. Perform Functional Check IAW paragraph AE–6.1.

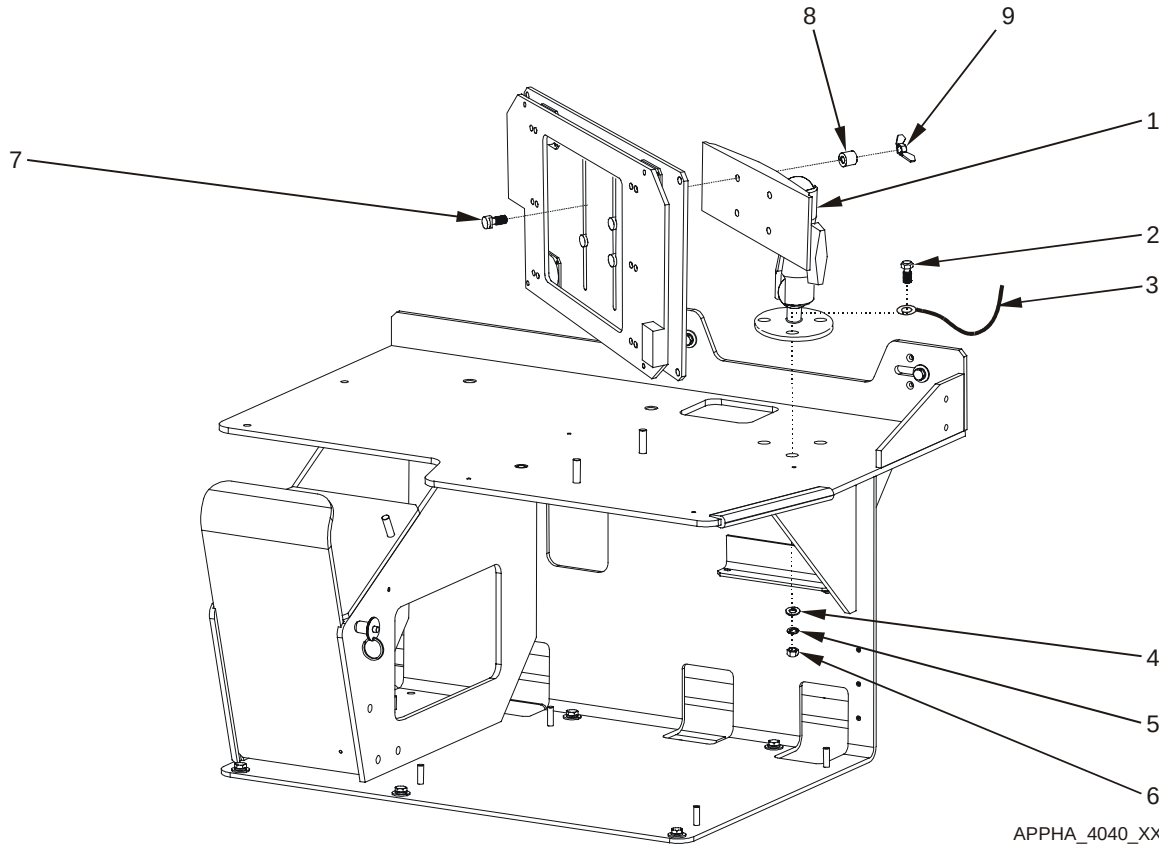

Figure AE-8. Remove and Replace RAM-Ball Assembly

Key and Parts List for Figure AE-8.

ITEM NO.	NOMENCLATURE	CAGE CODE	PART NUMBER	NSN	QTY	SMR
1	(RAM-Ball assembly) Mount, RAM-Ball	0J198	889489-1	5970-01-G72-7641	1	PAOZZ
2	Screw, Hex Head	96906	B1821AH025C100N	5305-01-389-7984	1	PAOZZ
3	(Safety lanyard) Wire Rope Assembly	39428	8925T5-7X19-1/8 Bare Rope		1	PAOZZ
4	Washer, Flat	96906	MS27183-10	5310-00-809-4058	1	PAOZZ
5	Washer, Lock	96906	MS35338-44	5310-00-582-5965	1	PAOZZ
6	Nut, Hex Head	96906	MS35649-2252	5310-00-997-1888	3	PAOZZ
7	Bolt, Square Neck	96906	MS35751-17	5306-00-889-2943	4	PAOZZ
8	Spacer, Aluminum	57177	10705AL315C	5365-01-G72-7642	4	PAOZZ
9	Nut, Self-Locking, Wing	96906	MS51553-420	5310-01-384-2546	4	PAOZZ
10	Screw, Flat Head	96906	MS35190-291	5306-00-042-6921	2	PAOZZ
--	Strap, Tie Down, Elect	39428	7130K31	5975-01-G72-7634	6	PAOZZ

AE–6.11 REMOVE/REPLACE AMPLIFIER AND FASTENER GUARD

Refer to Figure AE-9.

AE–6.11.1 REMOVE AMPLIFIER AND FASTENER GUARD

WARNING

Before conducting maintenance involving the removal and replacement of system components, ensure that all power to the FBCB2 system is off (including power from the vehicle). Failure to comply with warning may result in equipment damage or injury to personnel.

a. Power down AN/UYK-128(V) system IAW Operator's Manual TM 11-7010-326-10 or Pocket Guide TB 11-7010-326-10.

b. Loosen two thumbscrews on Amplifier and Fastener Guard.

c. Raise guard bumper as high as it will go and tighten thumbscrews.

d. Remove SINCGARS radio, amplifier, amplifier-adapter and mounting base IAW TM 11-5820-890-20.

NOTE

The HMMWV Amplifier and Fastener Guard is attached to the underside of the rack top shelf. When the SINCGARS mounting base is removed, the two screws that hold the guard are exposed.

e. Remove two hex screws (5), flat washers (4), lock washers (3) and hex nuts (2) from Amplifier and Fastener Guard and rack top shelf using 1/2" socket with ratchet and 1/2" open-end wrench.

f. Remove Amplifier and Fastener Guard (1) from rack.

AE–6.11.2 REPLACE AMPLIFIER AND FASTENER GUARD

a. Align Amplifier and Fastener Guard (1) mounting holes with rack top shelf mounting holes.

b. Install and tighten two hex screws (5), flat washers (4), lock washers (3) and hex nuts (2) on Amplifier and Fastener Guard and rack top shelf using 1/2" socket with ratchet and 1/2" open-end wrench.

c. Loosen two thumbscrews on Amplifier and Fastener Guard bumper.

d. Raise guard bumper as high as it will go and tighten thumbscrews.

e. Replace SINCGARS radio, amplifier, amplifier-adapter and mounting base IAW TM 11-5820-890-20.

f. Loosen two thumbscrews on Amplifier and Fastener Guard bumper.

g. Lower guard bumper until it lightly rests on the cooling fins of the amplifier.

h. Tighten thumbscrews.

i. Perform Functional Check IAW paragraph AE–6.1.

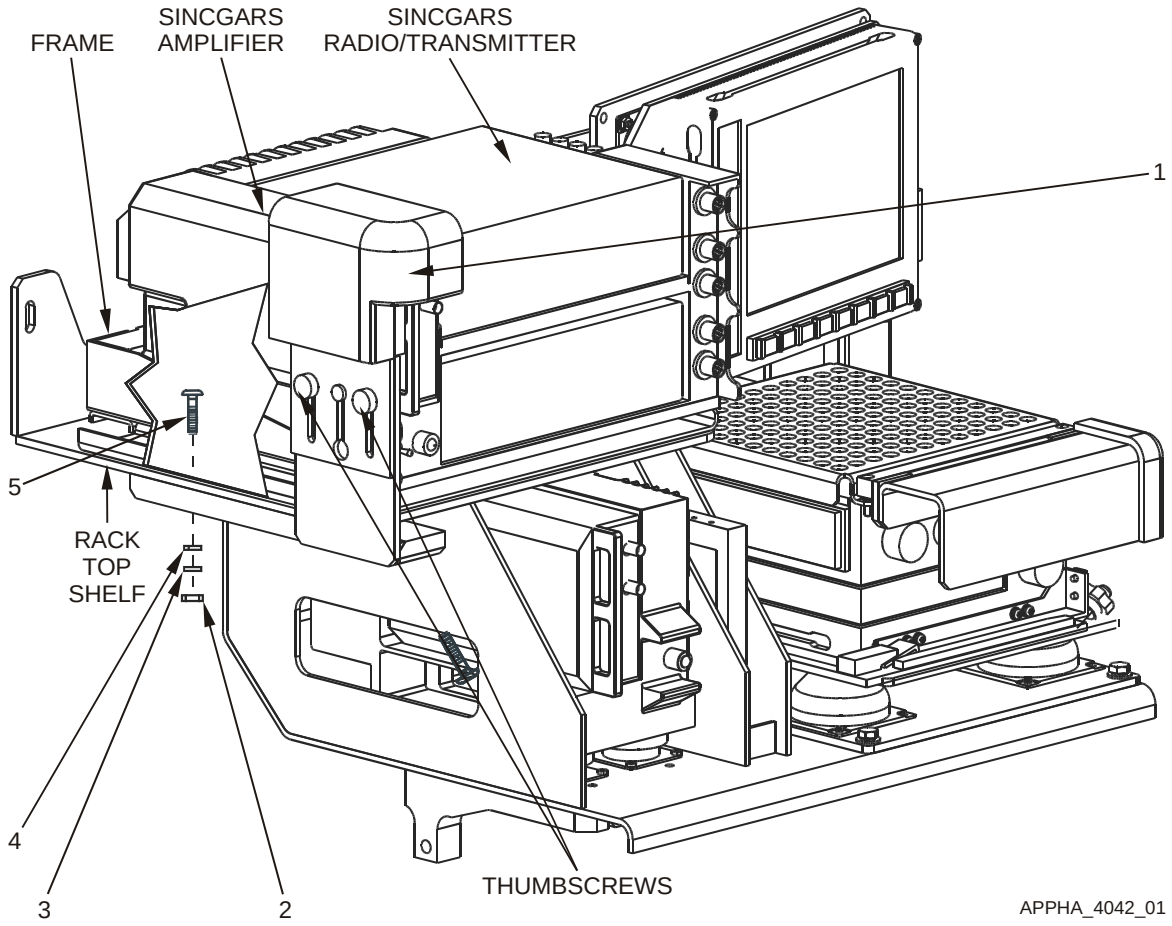

Figure AE-9. Remove and Replace Amplifier and Fastener Guard

Key and Parts List for Figure AE-9.

ITEM NO.	NOMENCLATURE	CAGE CODE	PART NUMBER	NSN	QTY	SMR
1	(Amplifier and Fastener Guard) Guard, Amplifier	0J198	872842-1		1	PAOZZ
2	Nut, Plain, Hexagon	96906	MS35850-3312	5310-00-054-4892	2	PAOZZ
3	Washer, Lock	96906	MS35338-45	5310-00-407-9566	2	PAOZZ
4	Washer, Flat	96906	MS27183-12	5310-00-081-4219	2	PAOZZ
5	Screw, Cap, Hexagon	39428	99240A544		2	PAOZZ

APPENDIX AF

SUPPLEMENTARY INFORMATION FOR

M113 TACTICAL AIR COMMAND POST (TAC-P)

TABLE OF CONTENTS

		Page
AF-1	GENERAL	AF–3
AF-2	COMPONENT ITEM NUMBERS AND PART NUMBERS	AF–3
AF-3	SYSTEM INTERFACES	AF–3
AF-3.1	MECHANICAL	AF–3
AF-3.2	CABLE INTERFACES	AF–4
AF-4	COMPONENT LOCATION	AF–6
AF-4.1	GENERAL LOCATION	AF–6
AF-4.2	MOUNTING	AF–7
AF-5	PLATFORM-UNIQUE TROUBLESHOOTING	AF–9
AF-6	REMOVAL/REPLACEMENT IN THE PLATFORM	AF–9
AF-6.1	FUNCTIONAL CHECK	AF–9
AF-6.2	REMOVE/REPLACE W1 POWER CABLE	AF–10
AF-6.3	REMOVE/REPLACE W2 DISPLAY CABLE	AF–11
AF-6.4	REMOVE/REPLACE W3 SERIAL INTERFACE ADAPTER DEVICE (SIAD)	AF–12
AF-6.5	REMOVE/REPLACE W3P PLGR CABLE	AF–13
AF-6.6	REMOVE/REPLACE W3N INC CABLE	AF–14
AF-6.7	REMOVE/REPLACE W4 AUDIO CABLE	AF–15
AF-6.8	REMOVE/REPLACE PU ISOLATION ASSEMBLY	AF–17
AF-6.9	REMOVE/REPLACE PU MOUNT BRACKET	AF–20
AF-6.10	REMOVE/REPLACE DU ISOLATION ASSEMBLY	AF–23
AF-6.11	REMOVE/REPLACE RAM-BALL ASSEMBLY	AF–26
AF-6.12	REMOVE/REPLACE KEYBOARD UNIT (KU) STOWAGE BOX	AF–31
AF-6.13	REMOVE/REPLACE KEYBOARD UNIT (KU) STOWAGE BOX DOOR LATCHES	AF–33

LIST OF ILLUSTRATIONS

Page
Figure AF–1. Equipment Interface Block Diagram AF–5
Figure AF–2. Relative Component Locations AF–6
Figure AF–3. Detail Component Locations AF–7
Figure AF–4. Detail Component Locations AF–7
Figure AF–5. Cable Run AF–16
Figure AF–6. Remove and Replace PU Isolation Assembly AF–19
Figure AF–7. Remove and Replace PU Mount Bracket AF–22
Figure AF–8. Remove and Replace DU Isolation Assembly AF–25
Figure AF–9. Remove and Replace RAM-Ball Assembly AF–29
Figure AF–10. Remove and Replace Keyboard Unit (KU) Stowage Box AF–31
Figure AF–11. Remove and Replace Keyboard Unit (KU) Stowage Box Door Latch AF–34

AF-1 GENERAL

This appendix describes the interfaces between the FBCB2 equipment and the M113 Tactical Air Command Post (TAC-P). This appendix also identifies the component parts of the M113 Tactical Air Command Post (TAC-P) platform installation kit and details the removal and replacement procedures particular to the M113 Tactical Air Command Post (TAC-P).

AF-2 COMPONENT ITEM NUMBERS AND PART NUMBERS

Key and Parts List tables contained in the Removal and Replacement section of this Appendix serve a dual purpose. Use the Item Numbers in the Key to identify components and attaching hardware shown in the Figures illustrating the tasks. The nomenclature and part number for the hardware and equipment mounting components of the installation kit also are keyed to the Item Numbers in the tables. Additional parts ordering information, such as Contractor and Government Entity code (CAGE); National Stock Number (NSN); quantity; and Source, Maintenance, and Recoverability (SMR) codes, are provided. The Key and Parts List follow the task illustrations.

AF-3 SYSTEM INTERFACES

AF-3.1 MECHANICAL

The mechanical hardware-to-hardware interfaces include:

a. Cables

b. Processor Unit (PU)

c. Display Unit (DU)

d. Keyboard Unit (KU)

AF-3.2 CABLE INTERFACES

Figure AF–1 illustrates a block diagram of the interface between the FBCB2 equipment and the M113 Tactical Air Command Post (TAC-P) (Platform). Figure AF–1 also illustrates the signal and control interfaces along with the terminal connector labels (e.g., P1, P2). The purpose of each cable is listed below:

Cable Name	Purpose
W1–Cable	Supplies vehicle power (28 VDC) to the AN/UYK-128(V) computer and its subassemblies.
W2–Cable	Supplies power and signals to the Display Unit (DU) and Keyboard Unit (KU). Returns Man Machine Interface (MMI) information from the KU to the Processor Unit (PU).
W3–Cable	The Serial Interface Adapter Device (SIAD) is a conduit assembly that breaks out each of the serial interface ports to a connector.
W3P–Cable	Collects position and time information from the PLGR.
W3N–Cable	Provides duplex communication between the PU, Internet Controller (INC) and radios.
W4–Cable	Connects audio signals from the PU to the Intercom system and Combat Vehicle Crew (CVC) Helmet.
W5–Cable	The Expansion Interface Adapter Device (EIAD) is connected to the Universal Serial Bus (USB) connector only when this vehicle is to be used in a Tactical Operations Center (TOC) setup. When used in this configuration, the EIAD is connected between the PU J5 connector and local router.
Ground Strap	Provides safety ground for the PU.
Ground Strap	Provides safety ground for the DU.

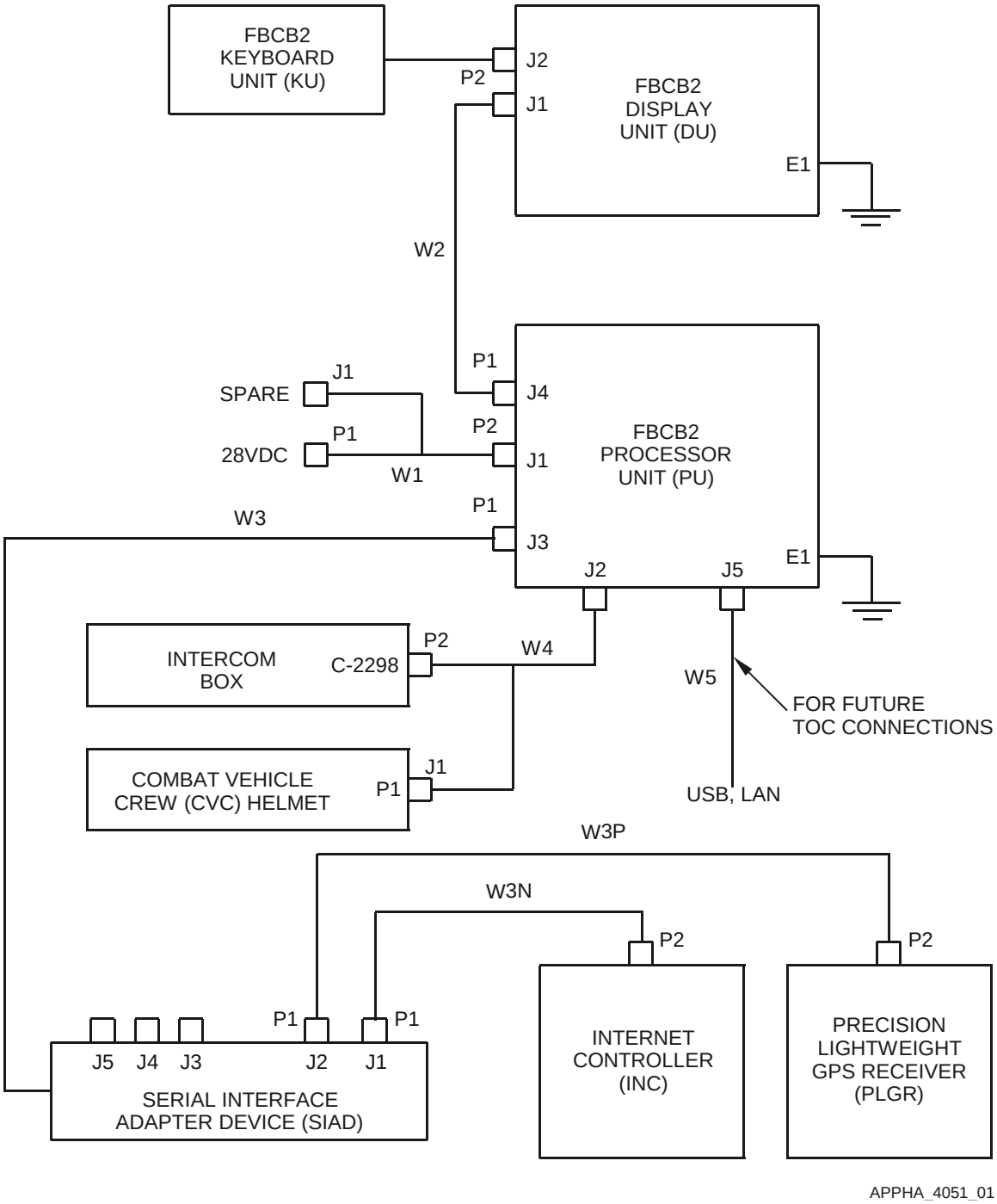

Figure AF–1. Equipment Interface Block Diagram

AF-4 COMPONENT LOCATION

AF-4.1 GENERAL LOCATION

Figure AF–2 shows the relative location of the FBCB2 computer equipment and mounting components in the M113 Tactical Air Command Post (TAC-P) vehicle. In this installation, the DU may be located in front of the engine wall or at mid-cabin against the curbside wall. The KU storage box may be mounted on the engine wall or on the ceiling at mid-cabin. The PU is mounted on the curbside wall above the PLGR.

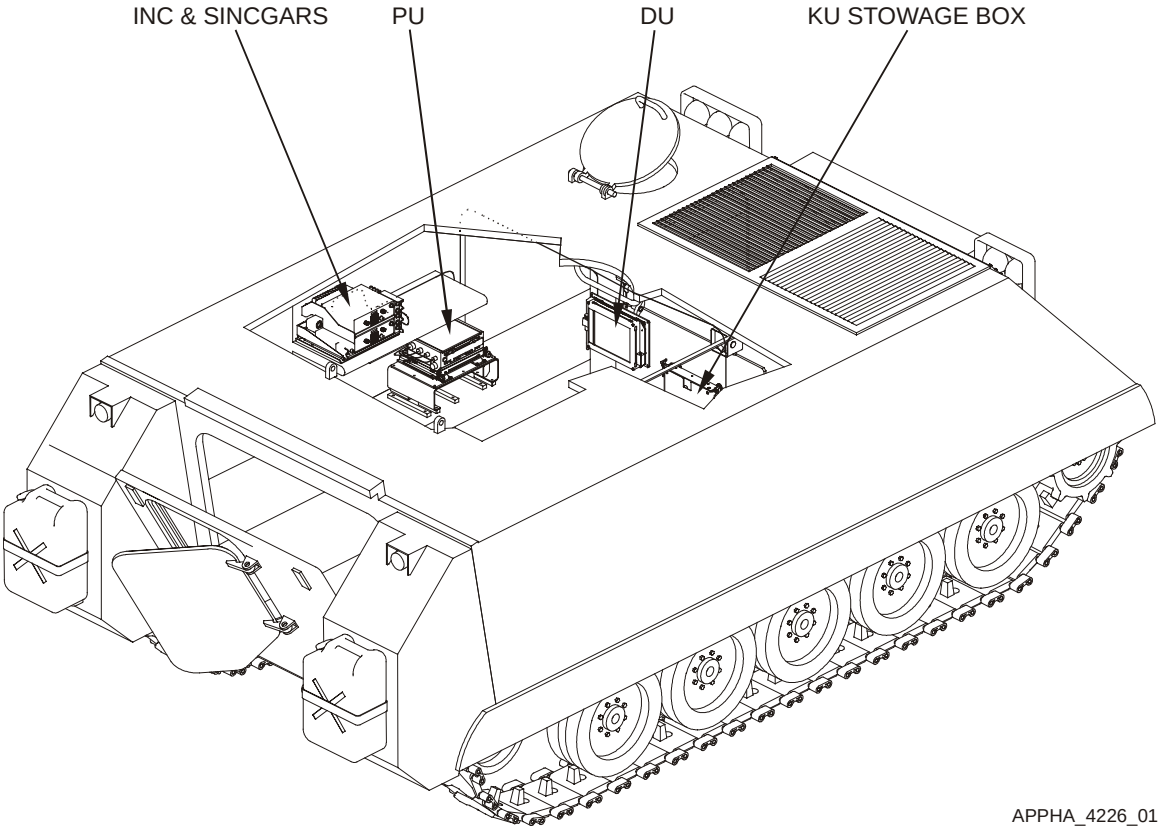

Figure AF–2. Relative Component Locations

AF-4.2 MOUNTING

Figure AF–3 and Figure AF–4 illustrate a detail view of the component locations for the Intercom (GFE), PLGR (GFE), DU, and KU Stowage Box.

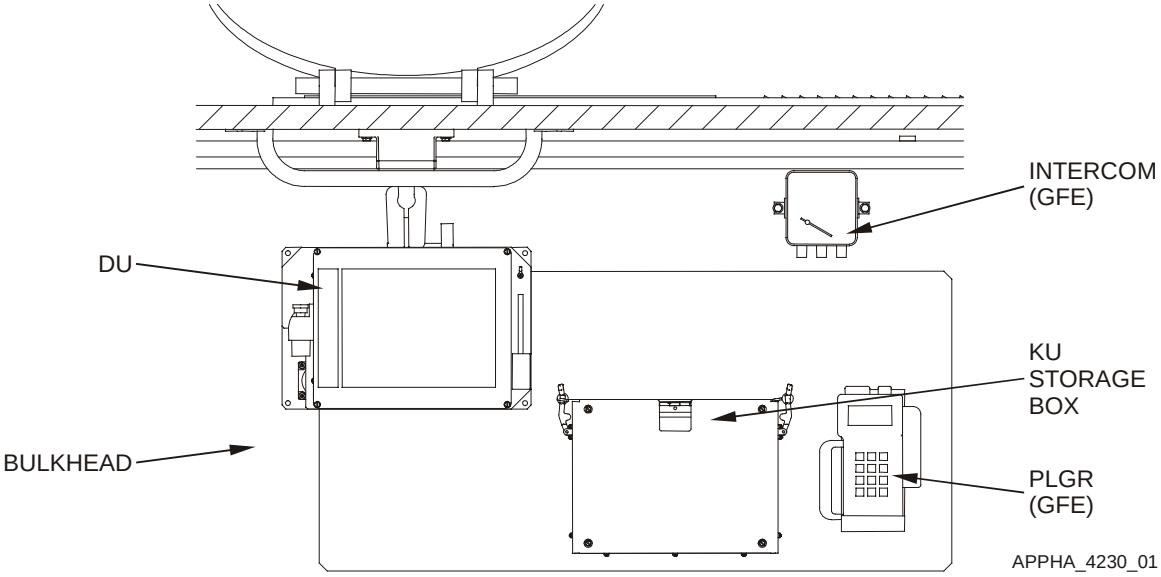

Figure AF–3. Detail Component Locations

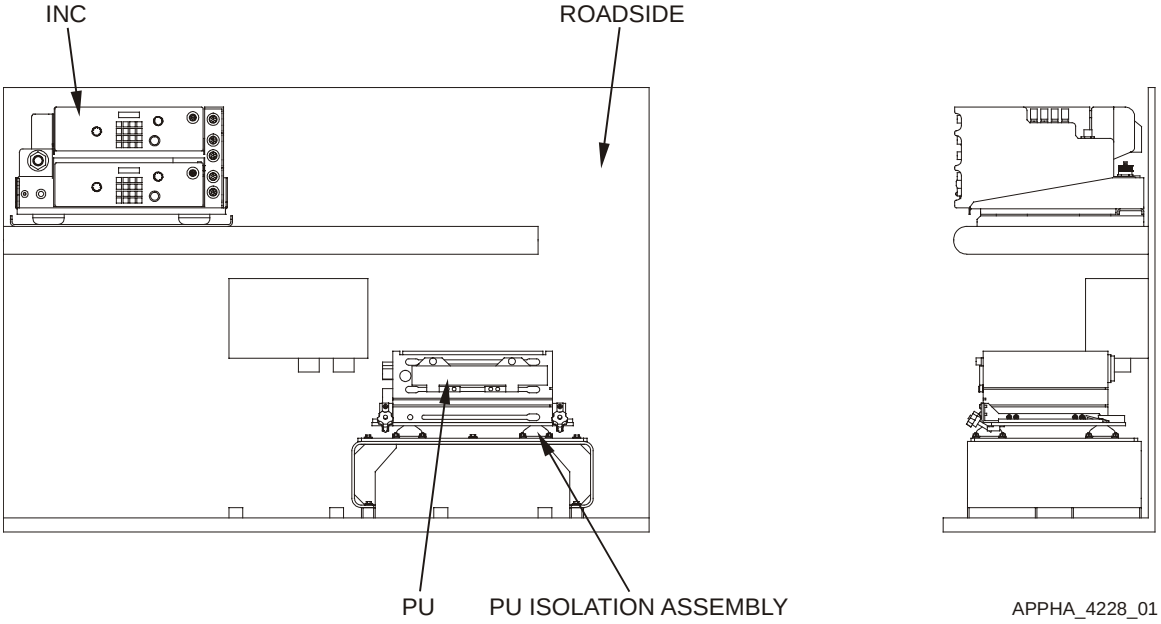

Figure AF–4. Detail Component Locations

Key and Parts List for Figure AF–3 and Figure AF–4.

ITEM NO.	NOMENCLATURE	CAGE CODE	PART NUMBER	NSN	QTY	SMR
1	Thermal Guard Assembly (if installed)	0J198	872860-1		1	XBOOO
--	Thermal Guard	0J198	872860-11		1	PAOZZ
--	Screw, Machine	96906	MS51958-63	5305-00-059-3659	4	PAOZZ
--	Grommet	63590	BG2903	5325-01-291-3383	4	PAOZZ
--	Retainer, Bolt	032U6	75-4119		4	PAOZZ
2	PLGR Mount					
--	Screw, Machine	96906	MS35207-263	5305-00-989-6265	3	PAOZZ
--	Washer, Flat	96906	MS27183-47	5310-01-312-4959	3	PAOZZ
--	Washer, Lock	96906	MS35338-43	5310-00-045-3296	3	PAOZZ
3	Intercom Mounting					
--	Screw, Cap, Hexagon	80204	B1821AH025C100N	5305-01-389-7984	2	PAOZZ
--	Washer, Flat	96906	MS27183-10	5310-00-809-4058	4	PAOZZ
--	Washer, Lock	96906	MS35338-44	5310-00-582-5965	2	PAOZZ
--	Nut, Plain, Hexagon	96906	MS35649-2252	5310-00-997-1888	2	PAOZZ

AF-5 PLATFORM-UNIQUE TROUBLESHOOTING

There are no unique troubleshooting procedures for this vehicle.

AF-6 REMOVAL/REPLACEMENT IN THE PLATFORM

Most installations must be tailored to the platform. Cables and brackets are unique to the installation. Before a part or assembly is removed from a vehicle, fill out a “Maintenance Request” DA Form 2407. One copy of this completed form must remain with the vehicle and the remaining copies must be kept with the faulty component. To prove the operability of the system after an item is replaced, perform the system Functional Check.

AF-6.1 FUNCTIONAL CHECK

AF-6.1.1 POWER UP

Power up and initialize all interface equipment and the AN/UYK-128(V) In Accordance With (IAW) the Operator’s Manual TM 11-7010-326-10, or Pocket Guide TB 11-7010-326-10.

AF-6.1.2 VERIFICATION

NOTE

Observe that the Display Unit PWR, DISP and CPU green LED lights are lit.

a. Observe that the PLGR synchronizes with PU, indicated by the PLGR dialog box showing green.

b. Observe that the Router synchronizes with the PU, indicated by the Router dialog box showing green.

c. At the Session Manager screen, select OPS button to display the OPS screen.

d. Verify the GPS status is either green or amber on the Classification/Status Bar.

e. Verify the Communications status is either green or amber on the Classification/Status Bar.

AF-6.1.3 POWER DOWN

Power down all interface equipment and the AN/UYK-128(V) IAW the Operator’s Manual TM 11-7010-326-10, or Pocket Guide TB 11-7010-326-10.

AF-6.2 REMOVE/REPLACE W1 POWER CABLE

Refer to Figure AF–5.

AF-6.2.1 REMOVE W1 POWER CABLE

WARNING

Before conducting maintenance involving the removal or replacement of system components, ensure that all power to the FBCB2 system is off (including power from the vehicle). Failure to comply with warning may result in equipment damage or injury to personnel.

a. Power down AN/UYK-128(V) system IAW Operator's Manual TM 11-7010-326-10, or Pocket Guide TB 11-7010-326-10.

b. Disconnect W1-P1 cable connector from vehicle utility power connector.

c. Disconnect W1-J1 cable connector from power interface cable (if applicable).

d. Disconnect W1-P2 cable connector from PU J1 connector.

e. Install protective cap on PU J1 connector.

NOTE

Note cable routing and tie-wrap locations before removing cable or tie-wraps.

f. Remove tie-wraps securing W1 cable using diagonal wire cutters.

g. Remove W1 power cable (4).

AF-6.2.2 REPLACE W1 POWER CABLE

a. Route W1 power cable (4).

b. Remove protective cap from PU J1 connector.

c. Connect W1-P2 cable connector to PU J1 connector.

d. Connect W1-J1 cable connector to power interface cable (if applicable).

e. Connect W1-P1 cable connector to vehicle utility power connector.

f. Secure W1 cable using tie-wraps, as applicable.

g. Dress tie-wraps using diagonal wire cutters.

h. Perform Functional Check IAW paragraph AF-6.1.

AF-6.3 REMOVE/REPLACE W2 DISPLAY CABLE

Refer to Figure AF–5.

AF-6.3.1 REMOVE W2 DISPLAY CABLE

WARNING

Before conducting maintenance involving the removal or replacement of system components, ensure that all power to the FBCB2 system is off (including power from the vehicle). Failure to comply with warning may result in equipment damage or injury to personnel.

a. Power down AN/UYK-128(V) system IAW Operator's Manual TM 11-7010-326-10, or Pocket Guide TB 11-7010-326-10.

b. Disconnect W2-P1 cable connector from PU J4 connector.

c. Install protective cap on PU J4 connector.

d. Disconnect W2-P2 cable connector from display J1 connector.

e. Install protective cap on display J1 connector.

NOTE

Note cable routing and tie-wrap locations before removing cable or tie-wraps.

f. Remove tie-wraps from W2 cable and ground strap using diagonal wire cutters.

g. Remove W2 display cable (5).

AF-6.3.2 REPLACE W2 DISPLAY CABLE

a. Route W2 cable (5).

b. Remove protective cap from display J1 connector.

c. Connect W2-P2 cable connector to display J1 connector.

d. Remove protective cap from PU J4 connector.

e. Connect W2-P1 cable connector to PU J4 connector.

f. Secure W2 cable and ground strap using tie-wraps.

g. Dress tie-wraps using diagonal wire cutters.

h. Perform Functional Check IAW paragraph AF-6.1.

AF-6.4 REMOVE/REPLACE W3 SERIAL INTERFACE ADAPTER DEVICE (SIAD)

Refer to Figure AF–5.

AF-6.4.1 REMOVE W3 SERIAL INTERFACE ADAPTER DEVICE (SIAD)

WARNING

Before conducting maintenance involving the removal or replacement of system components, ensure that all power to the FBCB2 system is off (including power from the vehicle). Failure to comply with warning may result in equipment damage or injury to personnel.

a. Power down AN/UYK-128(V) system IAW Operator's Manual TM 11-7010-326-10, or Pocket Guide TB 11-7010-326-10.

b. Disconnect W3N-P1 cable connector from W3 SIAD J1 connector.

c. Disconnect W3P-P1 cable connector from W3 SIAD J2 connector.

d. Disconnect W3 SIAD-P1 cable connector from PU J3 connector.

e. Install protective cap on PU J3 connector.

NOTE

Note cable routing and tie-wrap locations before removing cable or tie-wraps.

f. Remove tie-wraps securing W3 SIAD using diagonal wire cutters.

g. Remove W3 SIAD (2).

AF-6.4.2 REPLACE W3 SERIAL INTERFACE ADAPTER DEVICE (SIAD)

a. Route W3 SIAD (2) into original position.

b. Remove protective cap from PU J3 connector.

c. Connect W3 SIAD-P1 cable connector to PU J3 connector.

d. Connect W3P-P1 cable connector to W3 SIAD J2 connector.

e. Connect W3N-P1 cable connector to W3 SIAD J1 connector.

f. Secure W3 SIAD using tie-wraps.

g. Dress tie-wraps using diagonal wire cutters.

h. Perform Functional Check IAW paragraph AF-6.1.

AF-6.5 REMOVE/REPLACE W3P PLGR CABLE

Refer to Figure AF–5.

AF-6.5.1 REMOVE W3P PLGR CABLE

WARNING

Before conducting maintenance involving the removal or replacement of system components, ensure that all power to the FBCB2 system is off (including power from the vehicle). Failure to comply with warning may result in equipment damage or injury to personnel.

a. Power down AN/UYK-128(V) system IAW Operator's Manual TM 11-7010-326-10, or Pocket Guide TB 11-7010-326-10.

b. Disconnect W3P-P1 cable connector from W3 SIAD J2 connector.

c. Remove PLGR from mount.

d. Disconnect W3P-P2 cable connector from PLGR J2 connector using an offset tip screwdriver.

NOTE

Note cable routing and tie-wrap locations before removing cable or tie-wraps.

e. Remove tie-wraps securing W3P cable using diagonal wire cutters.

f. Remove W3P cable (1).

AF-6.5.2 REPLACE W3P PLGR CABLE

a. Route W3P cable (1).

b. Connect W3P-P2 cable connector to PLGR J2 connector using an offset flat screwdriver.

c. Install PLGR in mount.

d. Connect W3P-P1 cable connector to W3 SIAD J2 connector.

e. Secure W3P cable using tie-wraps.

f. Dress tie-wraps using diagonal wire cutters.

g. Perform Functional Check IAW paragraph AF-6.1.

AF-6.6 REMOVE/REPLACE W3N INC CABLE

Refer to Figure AF–5.

AF-6.6.1 REMOVE W3N INC CABLE

WARNING

Before conducting maintenance involving the removal or replacement of system components, ensure that all power to the FBCB2 system is off (including power from the vehicle). Failure to comply with warning may result in equipment damage or injury to personnel.

a. Power down AN/UYK-128(V) system IAW Operator's Manual TM 11-7010-326-10, or Pocket Guide TB 11-7010-326-10.

b. Disconnect W3N-P1 cable connector from W3 SIAD J1connector.

c. Disconnect W3N-P2 cable connector from SINCGARS INC J6 connector.

NOTE

Note cable routing and tie-wrap locations before removing cable or tie-wraps.

d. Remove tie-wraps securing W3N cable using diagonal cutters.

e. Remove W3N cable (3).

AF-6.6.2 REPLACE W3N INC CABLE

a. Route W3N cable (3).

b. Connect W3N-P2 cable connector to SINCGARS INC J6 connector.

c. Connect W3N-P1 cable connector to W3 SIAD J1 connector.

d. Secure W3N cable using tie-wraps.

e. Dress tie-wraps using diagonal wire cutters.

f. Perform Functional Check IAW paragraph AF-6.1.

AF-6.7 REMOVE/REPLACE W4 AUDIO CABLE

Refer to Figure AF–5.

AF-6.7.1 REMOVE W4 AUDIO CABLE

WARNING

Before conducting maintenance involving the removal or replacement of system components, ensure that all power to the FBCB2 system is off (including power from the vehicle). Failure to comply with warning may result in equipment damage or injury to personnel.

a. Power down AN/UYK-128(V) system IAW Operator's Manual TM 11-7010-326-10, or Pocket Guide TB 11-7010-326-10.

b. Disconnect W4-P1 cable connector from PU J2 connector.

c. Install protective cap on PU J2 connector.

d. Disconnect W4-P2 cable connector from Intercom Box C-2298 connector.

e. Disconnect W4-J1 cable connector from Combat Vehicle Crew (CVC) helmet P1 connector.

NOTE

Note cable routing and tie-wrap locations before removing cable or tie-wraps.

f. Remove tie-wraps securing W4 cable using diagonal wire cutters.

g. Remove W4 cable (6).

AF-6.7.2 REPLACE W4 AUDIO CABLE

a. Route W4 cable (6).

b. Connect W4-J1 cable connector to CVC helmet P1 connector.

c. Connect W4-P2 cable connector to the Intercom Box C-2298 connector.

d. Remove protective cap from PU J2 connector.

e. Connect W4-P1 cable connector to PU J2 connector.

f. Secure W4 cable using tie-wraps.

g. Dress tie-wraps using diagonal wire cutters.

h. Perform Functional Check IAW paragraph AF-6.1.

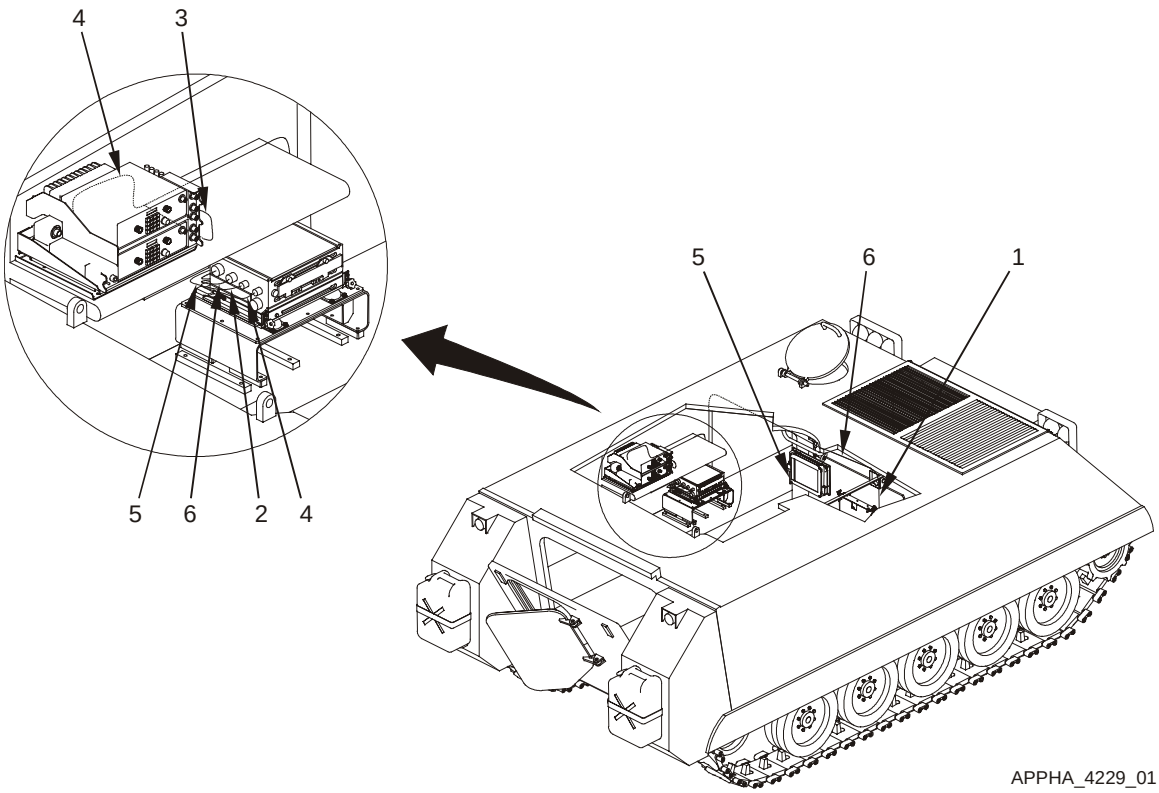

Figure AF–5. Cable Run

Key and Parts List for Figure AF–5.

ITEM NO.	NOMENCLATURE	CAGE CODE	PART NUMBER	NSN	QTY	SMR
1	Cable Assembly W3P	0J198	881335-3	5995-01-478-4898	1	PAOZZ
2	Adapter Assy SIAD W3	0J198	881331-1	4920-01-478-3722	1	PAODD
3	Cable Assembly W3N	0J198	881336-1	5995-01-478-4913	1	PAOZZ
4	Cable Assembly W1	0J198	861880-6	5995-01-478-4952	1	PAOZZ
5	Cable Assembly W2	0J198	881327-2	5995-01-478-4873	1	PAOZZ
6	Cable Assembly W4	0J198	881270-1	5995-01-478-4924	1	PAOZZ
--	Holder, Cable, Tie 2w	39428	7566K27		25	PAOZZ
--	Strap, Tie Down, Elect	39428	7130K31		25	PAOZZ

AF-6.8 REMOVE/REPLACE PU ISOLATION ASSEMBLY

Refer to Figure AF–6.

NOTE

Ground straps are attached to components at one end (PU and DU) and a frame ground at the other end. Regardless of where the ground strap terminates, it is usually a burnished (void of paint) area. If the ground strap is removed from a burnished area, make sure to return it to the same burnished area. Where applicable, always connect the ground strap first when assembling, and disconnect the ground strap last when disassembling.

AF-6.8.1 REMOVE PU ISOLATION ASSEMBLY

WARNING

Before conducting maintenance involving the removal or replacement of system components, ensure that all power to the FBCB2 system is off (including power from the vehicle). Failure to comply with warning may result in equipment damage or injury to personnel.

a. Power down AN/UYK-128(V) system IAW Operator's Manual TM 11-7010-326-10, or Pocket Guide TB 11-7010-326-10.

NOTE

Do not remove the Removable Hard Disk Drive Cartridge (RHDDC), locking bracket, or thermal guard (if installed) from PU.

b. Remove PU IAW Unit Maintenance Manual TM 11-7010-326-20&P.

c. Remove one hex head screw (1), lock washer (2), flat washer (3), ground strap, flat washer (3), and hex nut (4) from PU isolation assembly (5) bottom plate and PU Mount Bracket (6) using a 7/16" socket with ratchet, 3" extension and 7/16" open end wrench.

d. Remove remaining five hex head screws (1), lock washers (2), flat washers (3), flat washers (3), and hex nuts (4) from PU isolation assembly (5) bottom plate and Mount Bracket (6) using a 7/16" socket with ratchet, 3" extension and 7/16" open end wrench.

e. Remove the PU isolation assembly (5) from the Mount Bracket (6).

AF-6.8.2 REPLACE PU ISOLATION ASSEMBLY

a. Align six PU Isolation Assembly (5) bottom plate holes with Mount Bracket (6).

NOTE

To ensure positive ground, PU ground strap must make direct contact with bare metal. Ensure PU ground strap is installed in its original location at the PU isolation assembly bottom plate mounting hole. Slip the lock washer, flat washer and then the ground strap on the mounting screw before installing and tightening screw.

b. Install remaining one hex head screw (1), lock washer (2), flat washer (3), ground strap, flat washer (3), and hex nut (4) on PU isolation assembly bottom plate to the Mount Bracket (6) using a 7/16” socket with ratchet and 3” extension.

c. Install five hex head screws (1), lock washers (2), flat washers (3), flat washers (3) and hex nuts (4) on PU isolation assembly (5) bottom plate to the Mount Bracket (6) using a 7/16” socket with ratchet and 3” extension.

d. Install PU IAW Unit Maintenance Manual TM 11-7010-326-20&P.

e. Perform Functional Check IAW paragraph AF-6.1.

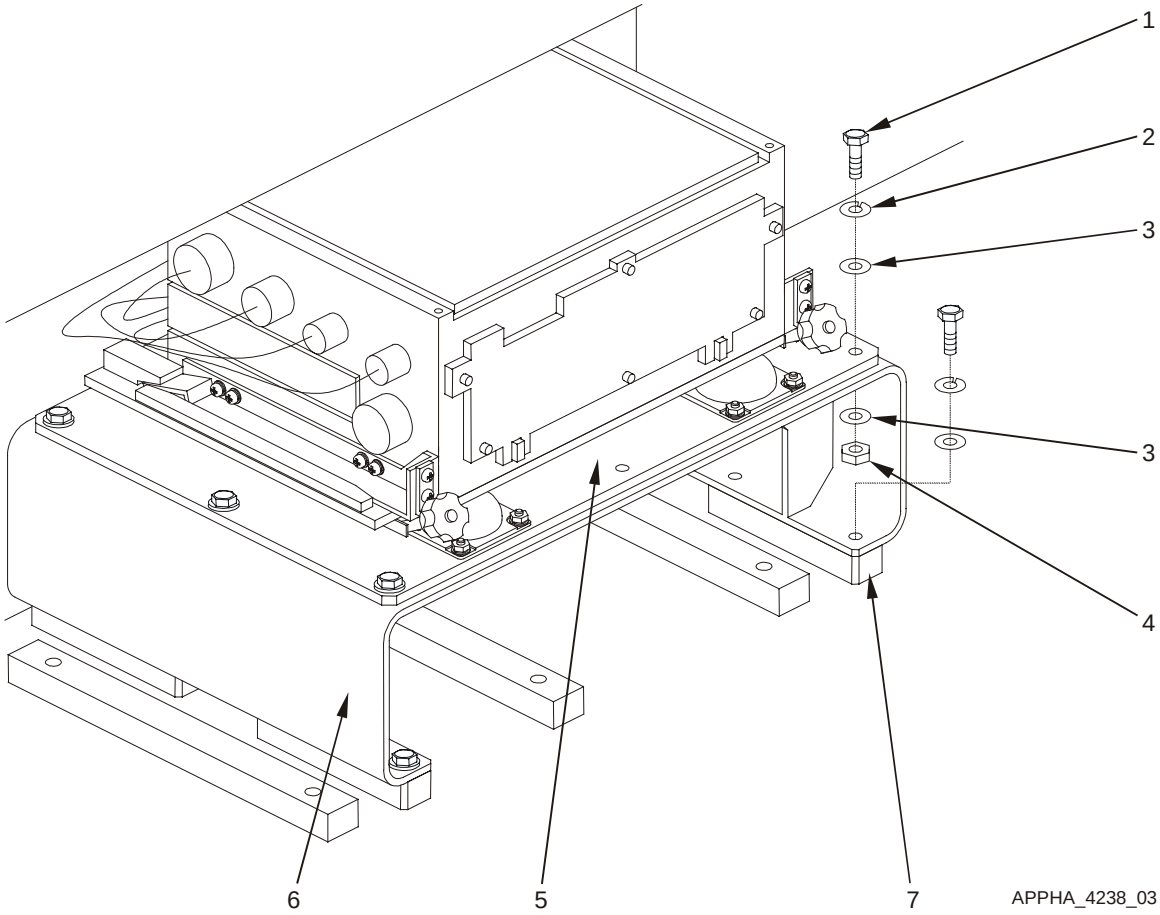

Figure AF–6. Remove and Replace PU Isolation Assembly

Key and Parts List for Figure AF–6.

ITEM NO.	NOMENCLATURE	CAGE CODE	PART NUMBER	NSN	QTY	SMR
1	Screw, Hex Head	80204	B1821AH025C125N	5305-00-068-0509	6	PAOZZ
2	Washer, Lock	96906	MS35338-44	5310-00-582-5965	10	PAOZZ
3	Washer, Flat	96906	MS27183-10	5310-00-809-4058	16	PAOZZ
4	Hex Nut	96906	MS35649-2252	5310-00-997-1888	6	PAOZZ
5	(PU isolation assembly) Plate, Resilient Mount PU	0J198	872826-1	5340-01-481-5742	1	PAODD
--	Assembly, PU Lock	0J198	861865-1	5340-01-G72-7627	1	XBOOO
--	Bracket, Locking PU	0J198	861871-3	5340-01-G72-7630	1	PAOZZ
--	Screw	80205	MS35190-253	5305-00-059-4568	2	PAOZZ
6	PU Mount Bracket	0J198	889552-1		1	XBOZZ
7	Mounting Block		4250241			

AF-6.9 REMOVE/REPLACE PU MOUNT BRACKET

Refer to Figure AF–7.

NOTE

Ground straps are attached to components at one end (PU and DU) and a frame ground at the other end. Regardless of where the ground strap terminates, it is usually a burnished (void of paint) area. If the ground strap is removed from a burnished area, make sure to return it to the same burnished area. Where applicable, always connect the ground strap first when assembling, and disconnect the ground strap last when disassembling.

AF-6.9.1 REMOVE PU MOUNT BRACKET

WARNING

Before conducting maintenance involving the removal or replacement of system components, ensure that all power to the FBCB2 system is off (including power from the vehicle). Failure to comply with warning may result in equipment damage or injury to personnel.

a. Power down AN/UYK-128(V) system IAW Operator's Manual TM 11-7010-326-10, or Pocket Guide TB 11-7010-326-10.

NOTE

Do not remove the Removable Hard Disk Drive Cartridge (RHDDC), locking bracket, or thermal guard (if installed) from PU.

b. Remove PU IAW Unit Maintenance Manual TM 11-7010-326-20&P.

c. Remove PU Isolation Assembly (4) according to paragraph AF-6.8.1.

d. Remove eight hex head screws (1), lock washers (2) and flat washers (3) from PU Mount Bracket (5) from the Mounting Block (6) using a 7/16" socket with ratchet and 3" extension.

e. Remove the PU Mount Bracket (5).

AF-6.9.2 REPLACE PU MOUNT BRACKET

a. Align eight PU Mount Bracket (5) plate holes with the Mounting Block (8).

b. Install the seven hex head screws (1), lock washers (2) and flat washers (3) into PU Mount Bracket (5) to the Mounting Block (6) using a 7/16” socket with ratchet and 3” extension.

NOTE

To ensure positive ground, PU ground strap must make direct contact with bare metal. Ensure PU ground strap is installed in its original location at the PU mount bracket bottom plate mounting hole. Slip the lock washer, flat washer and then the ground strap on the mounting screw before installing and tightening screw.

c. Install one remaining hex head screw (1), ground strap, lock washer (2) and flat washer (3) into PU Mount Bracket (5) to the Mounting Block (6) using a 7/16” socket with ratchet and 3” extension.

d. Install PU Isolation Assembly (4) according to paragraph AF-6.8.2.

e. Install PU IAW Unit Maintenance Manual TM 11-7010-326-20&P.

f. Perform Functional Check IAW paragraph AF-6.1.

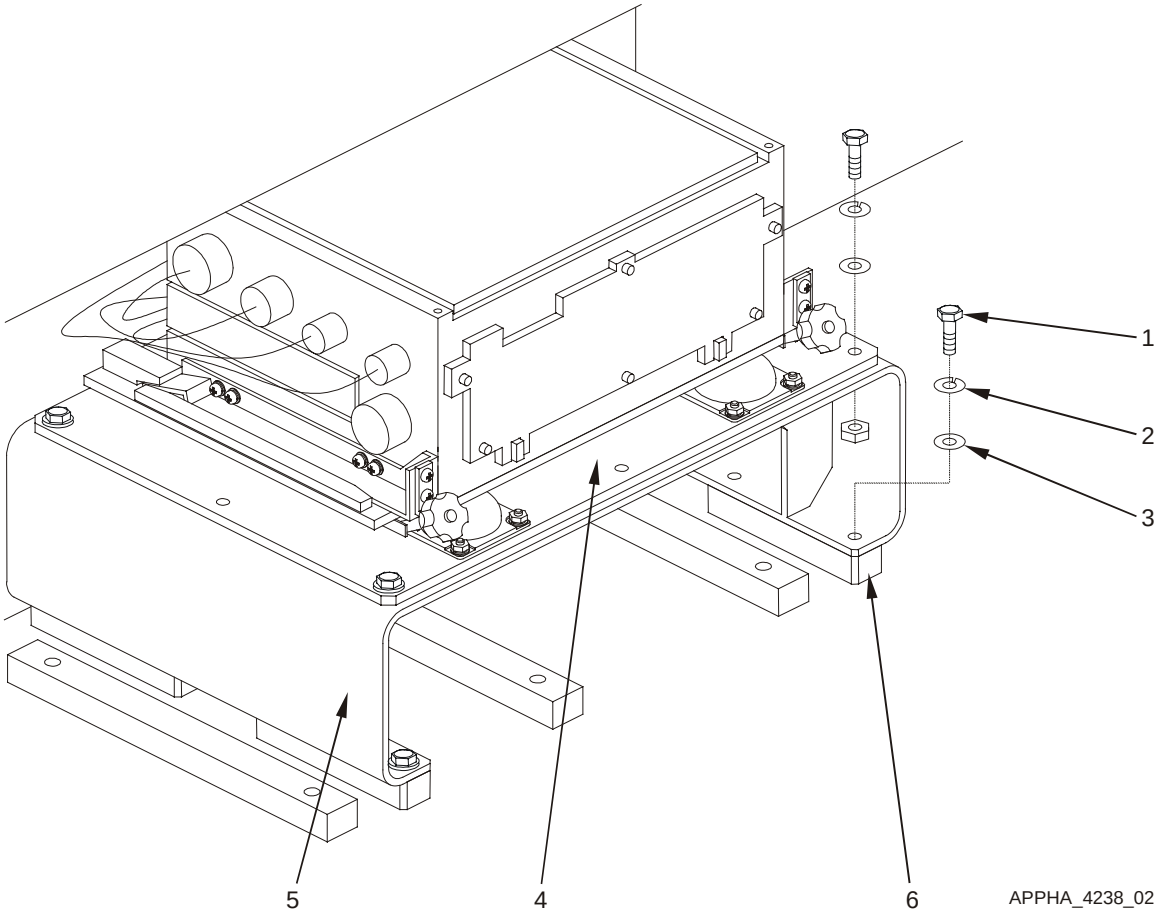

Figure AF–7. Remove and Replace PU Mount Bracket

Key and Parts List for Figure AF–7.

ITEM NO.	NOMENCLATURE	CAGE CODE	PART NUMBER	NSN	QTY	SMR
1	Hex Head Screw	80204	B1821AH025C075N	5305-01-389-8000	8	PAOZZ
2	Washer, Lock	96906	MS35338-44	5310-00-582-5965	8	PAOZZ
3	Washer, Flat	96906	MS27183-10	5310-00-809-4058	8	PAOZZ
4	(PU isolation assembly) Plate, Resilient Mount PU	0J198	872826-1	5340-01-481-5742	1	PAODD
--	Assembly, PU Lock	0J198	861865-1	5340-01-G72-7627	1	XBOOO
--	Bracket, Locking PU	0J198	861871-3	5340-01-G72-7630	1	PAOZZ
--	Screw	80205	MS35190-253	5305-00-059-4568	2	PAOZZ
5	PU Mount Bracket	0J198	889552-1		1	XBOOO
6	Mounting Block		4250241			

AF-6.10 REMOVE/REPLACE DU ISOLATION ASSEMBLY

Refer to Figure AF–8.

NOTE

Ground straps are attached to components at one end (PU and DU) and a frame ground at the other end. Regardless of where the ground strap terminates, it is usually a burnished (void of paint) area. If the ground strap is removed from a burnished area, make sure to return it to the same burnished area. Where applicable, always connect the ground strap first when assembling, and disconnect the ground strap last when disassembling.

AF-6.10.1 REMOVE DU ISOLATION ASSEMBLY

WARNING

Before conducting maintenance involving the removal and replacement of system components, ensure that all power to the FBCB2 system is off (including power from the vehicle). Failure to comply with warning may result in equipment damage or injury to personnel.

a. Power down AN/UYK-128(V) system IAW Operator's Manual TM 11-7010-326-10, or Pocket Guide TB 11-7010-326-10.

b. Remove DU IAW Unit Maintenance Manual TM 11-7010-326-20&P.

NOTE

Note cable routing and tie-wrap locations before removing cable or tie-wraps.

c. Remove tie-wraps securing W2 cable and ground strap to DU isolation assembly using diagonal wire cutters.

d. Remove one self-locking wing nut (7), safety lanyard (8), spacer (6) and square neck bolt (5) from RAM-Ball display base with ball and DU isolation assembly (1) bottom plate.

CAUTION

Ensure support is provided to display while loosening RAM-Ball knob. Failure to comply could result in display falling from RAM-Ball mount causing equipment damage.

e. Loosen RAM-Ball knob while supporting DU isolation assembly (1) until RAM-Ball display base with ball can be lifted free of RAM-Ball socket arm.

f. Remove one self-locking wing nut (6), ground strap, spacer (5) and square neck bolt (4) from RAM-Ball display base with ball and DU isolation assembly bottom plate.

g. Remove remaining two self-locking wing nuts (6), spacers (5) and square neck bolts (4) from RAM-Ball display base with ball and DU isolation assembly bottom plate.

h. Remove DU isolation assembly (1).

AF-6.10.2 REPLACE DU ISOLATION ASSEMBLY

a. Align four RAM-Ball display base with ball installation holes with slots in the DU isolation assembly (1) bottom plate.

b. Install three square neck bolts (5), spacers (6) and self-locking wing nuts (7) on RAM-Ball display base with ball and DU isolation assembly (1) bottom plate.

CAUTION

Ensure RAM-Ball is free of dirt and contaminants before reassembling. Failure to comply can result in slippage or excess wear of RAM-Ball assembly.

c. Inspect and clean RAM-Ball socket arm and display base with ball, as necessary, using clean lint-free wipes.

d. Insert RAM-Ball display base with ball into RAM-Ball socket arm while supporting DU isolation assembly (1).

e. Adjust viewing angle and tighten RAM-Ball knob.

f. Install remaining square neck bolt (5), spacer (6), safety lanyard (8) and self-locking wing nut (7) on RAM-Ball display base with ball and DU isolation assembly (1) bottom plate.

g. Secure W2 display cable and ground strap to DU isolation assembly (1) bottom plate using tie-wraps.

h. Dress tie-wraps using diagonal wire cutters.

i. Install DU IAW Unit Maintenance Manual TM 11-7010-326-20&P.

j. Perform Functional Check IAW paragraph AF-6.1.

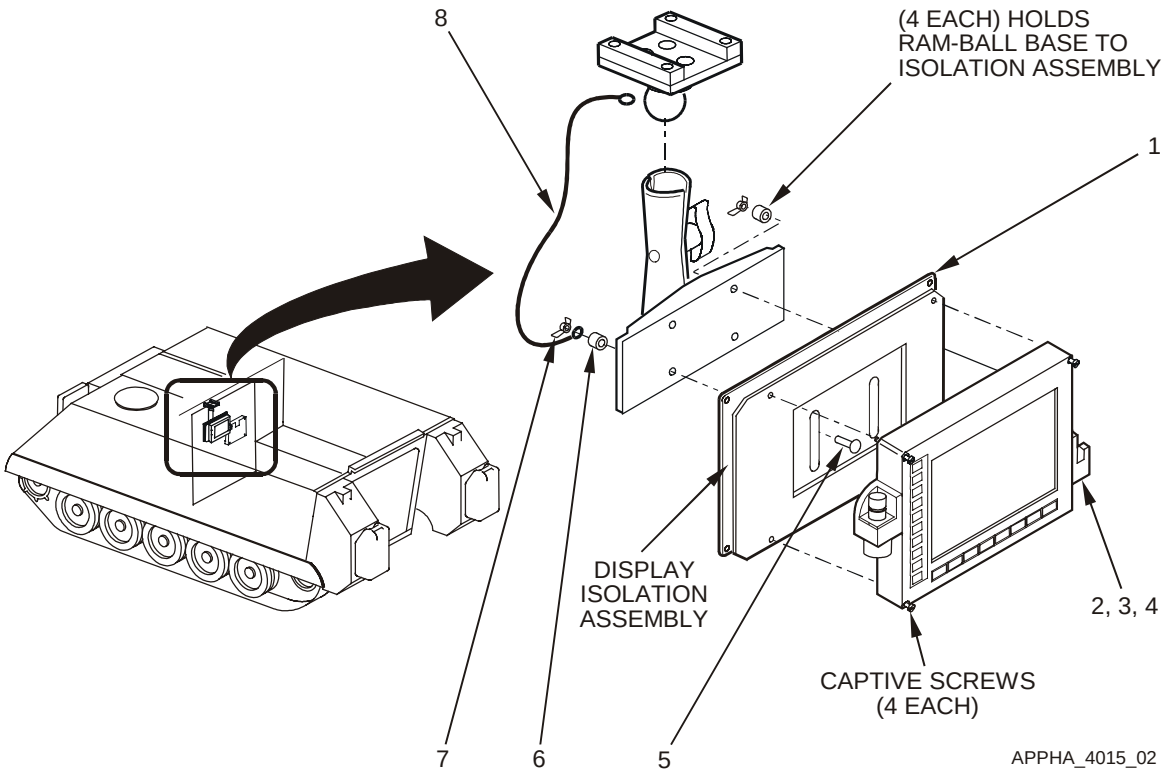

Figure AF–8. Remove and Replace DU Isolation Assembly

Key and Parts List for Figure AF–8.

ITEM NO.	NOMENCLATURE	CAGE CODE	PART NUMBER	NSN	QTY	SMR
1	(DU isolation assembly) Plate, Resilient Mount DU	0J198	872871-1	5340-01-G72-7628	1	PAODD
--	Assembly, DU Lock	0J198	872843-1	5340-01-G72-7629	1	XBOOO
2	Bracket, Locking	0J198	861871-3	5340-01-G72-7630	1	PAOZZ
3	Washer, Lock	96906	MS35338-42	5310-00-045-3299	2	PAOZZ
4	Screw, Flat Head	80205	MS35190-253	5305-00-059-4568	2	PAOZZ
5	Bolt, Square Neck	96906	MS35751-17	5306-00-889-2943	4	PAOZZ
6	Spacer, Aluminum	57177	10705AL315C	5365-01-G72-7642	4	PAOZZ
7	Nut, Self-Locking, Wing	96906	MS51553-420	5310-01-384-2546	4	PAOZZ
8	(Safety Lanyard) Wire Rope Assembly	39428	30645T11	4010-01-G72-7642	1	PAOZZ

AF-6.11 REMOVE/REPLACE RAM-BALL ASSEMBLY

Refer to Figure AF–10.

NOTE

Ground straps are attached to components at one end (PU and DU) and a frame ground at the other end. Regardless of where the ground strap terminates, it is usually a burnished (void of paint) area. If the ground strap is removed from a burnished area, make sure to return it to the same burnished area. Where applicable, always connect the ground strap first when assembling, and disconnect the ground strap last when disassembling.

AF-6.11.1 REMOVE RAM-BALL ASSEMBLY

WARNING

Before conducting maintenance involving the removal or replacement of system components, ensure that all power to the FBCB2 system is off (including power from the vehicle). Failure to comply with warning may result in equipment damage or injury to personnel.

a. Power down AN/UYK-128(V) system IAW Operator's Manual TM 11-7010-326-10, or Pocket Guide TB 11-7010-326-10.

b. Remove DU IAW Unit Maintenance Manual TM 11-7010-326-20&P.

NOTE

Note cable routing and tie-wrap locations before removing cable or tie-wraps.

c. Remove tie-wraps securing W2 display cable and ground strap to DU isolation assembly using diagonal wire cutters.

d. Remove one self-locking wing nut (6), safety lanyard (7), spacer (5) and square neck bolt (4) from RAM-Ball display base.

CAUTION

Ensure support is provided to display while loosening RAM-Ball knob. Failure to comply could result in display falling from RAM-Ball mount causing equipment damage.

e. Loosen RAM-Ball knob while supporting DU isolation assembly until RAM-Ball display base with ball can be lifted free of RAM-Ball socket arm.

f. Remove one self-locking wing nut (6), ground strap, spacer (5) and square neck bolt (4) from RAM-Ball display base with ball and DU isolation assembly bottom plate.

g. Remove remaining two self-locking wing nuts (6), spacers (5) and square neck bolts (4) from RAM-Ball display base with ball and DU isolation assembly bottom plate.

h. Remove RAM-Ball display base with ball from DU isolation assembly.

AF-6.11.1 REMOVE RAM-BALL ASSEMBLY (Continued)

i. Remove RAM-Ball socket arm from RAM-Ball mounting base with ball on Mounting DU Bracket (1).

j. Remove one hex head screw (8), safety lanyard (7), flat washer (9), and lock washer (10) from the RAM-Ball mounting base and the RAM-Ball Mounting Bracket (1).

k. Remove two flat head screws (3) from the RAM-Ball mounting base and the RAM-Ball Mounting Bracket (1).

l. Remove RAM-Ball mounting base from the RAM-Ball Mounting Bracket (1).

AF-6.11.2 REPLACE RAM-BALL ASSEMBLY

a. Align three holes in RAM-Ball mounting base with the DU Mounting Bracket (1) installation holes.

b. Install two flat head screws (2) into the RAM-Ball display mounting base with ball and the RAM-Ball Mounting Bracket (1) using a No. 3 cross-tip screwdriver.

c. Install one hex head screw (8), safety lanyard (7), flat washer (9), and lock washer (10) into the RAM-Ball mounting base with ball and the RAM-Ball Mounting Bracket (1) using a No. 3 cross-tip screwdriver.

d. Align RAM-Ball display base with ball to the four installation holes in the DU isolation assembly.

e. Install one self-locking wing nut (6), ground strap, spacer (5) and square neck bolt (4) into RAM-Ball display base with ball and DU isolation assembly bottom plate to the DU Mounting Bracket (1).

f. Install one self-locking wing nut (6), safety lanyard (7), spacer (5) and square neck bolt (4) into RAM-Ball display base with ball and DU isolation assembly bottom plate to the RAM-Ball display base with ball.

g. Install remaining two self-locking wing nuts (6), spacers (5) and square neck bolts (4) into RAM-Ball display base with ball and DU isolation assembly bottom plate to the DU Mounting Bracket (1).

CAUTION

Ensure RAM-Ball is free of dirt and contaminants before reassembling. Failure to comply can result in slippage or excess wear of RAM-Ball assembly.

h. Inspect and clean RAM-Ball socket arm, display and mounting base with ball, as necessary, using clean lint-free wipes.

CAUTION

Ensure support is provided to display while tightening RAM-Ball knob and lifting the assembly to the RAM-Ball mounting bracket (1). Failure to comply could result in display falling from RAM-Ball mount causing equipment damage.

i. Insert RAM-Ball display base with ball into RAM-Ball socket arm while supporting DU isolation assembly (1), and tighten the RAM-Ball Knob.

AF-6.11.2 REPLACE RAM-BALL ASSEMBLY (Continued)

j. Align the RAM-Ball display base with the DU isolation assembly to the three installation holes in the RAM-Ball Mounting Bracket (1).

k. Install two flat head screws (3) into the RAM-Ball mounting base and the RAM-Ball Mounting Bracket (1).

l. Install one hex head screw (8), safety lanyard (7), flat washer (9), and lock washer (10) into the RAM-Ball mounting base and the RAM-Ball Mounting Bracket (1).

NOTE

To ensure positive ground, PU ground strap must make direct contact with bare metal. Ensure PU ground strap is installed in its original location at the PU mount bracket bottom plate mounting hole. Slip the lock washer, flat washer and then the ground strap on the mounting screw before installing and tightening screw.

m. Install one self-locking wing nut (6), ground strap, spacer (5) and square neck bolt (4) into RAM-Ball display base with ball and DU isolation assembly bottom plate to the DU Mounting Bracket (1).

n. Install remaining two self-locking wing nuts (6), spacers (5) and square neck bolts (4) into RAM-Ball display base with ball and DU isolation assembly bottom plate to the DU Mounting Bracket (1).

o. Adjust viewing angle and tighten RAM-Ball knob.

p. Secure W2 display cable and ground strap to DU isolation assembly using tie-wraps.

q. Dress tie-wraps using diagonal wire cutters.

r. Install DU IAW Unit Maintenance Manual TM 11-7010-326-20&P.

s. Perform Functional Check IAW paragraph AF-6.1.

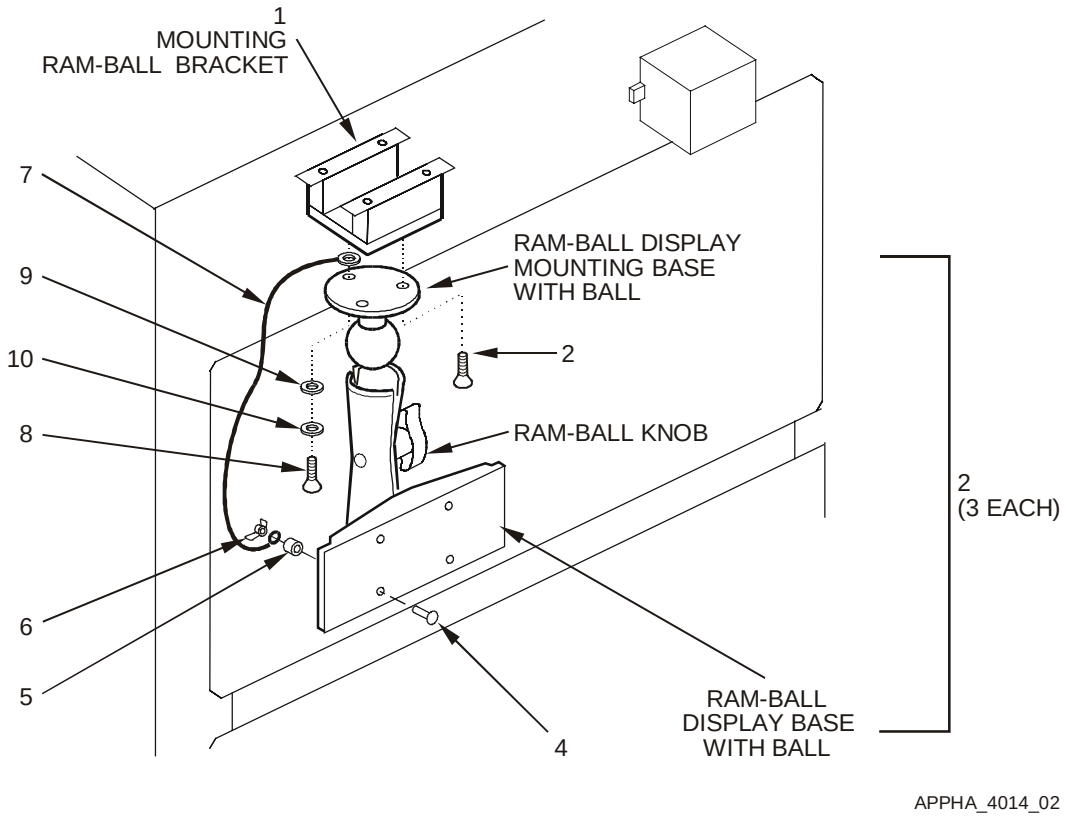

Figure AF–9. Remove and Replace RAM-Ball Assembly

Key and Parts List for Figure AF–9.

ITEM NO.	NOMENCLATURE	CAGE CODE	PART NUMBER	NSN	QTY	SMR
1	Bracket, RAM-Ball Mounting	0J198	872867-1	5340-01-G72-7669	1	XBOOO
--	Screw, Cap, Hexagon	80204	B1821AH025C100N	5305-01-389-7984	4	PAOZZ
--	Washer, Lock	96906	MS35338-44	5310-00-582-5965	5	PAOZZ
--	Washer, Flat	96906	MS15795-810		4	PAOZZ
--	Retainer, Push	96906	94800A720		4	PAOZZ
2	Mount, RAM-Ball (3 Pieces)	0J198	889489-1	5975-01-G72-7641	1	PAOZZ
3	Screw, Machine	96906	MS35190-288	5305-00-958-5245	2	PAOZZ
4	Bolt, Square Neck	96906	MS35751-17	5306-00-889-2943	4	PAOZZ
5	Spacer, Aluminum	57177	10705AL315C	5365-01-G72-7642	4	PAOZZ
6	Nut, Self-Locking, Wing	96906	MS51553-420	5310-01-384-2546	4	PAOZZ
7	(Safety Lanyard) Wire Rope Assembly	39428	30645T11	4010-01-G72-7642	1	PAOZZ
8	Screw, hex head	80204	B1821AH025C075N	5305-01-389-7984	4	PAOZZ
9	Washer, Flat		MS27183-10			
10	Washer, Lock	96906	MS35338-44	5310-00-582-5965	5	PAOZZ

AF-6.12 REMOVE/REPLACE KEYBOARD UNIT (KU) STOWAGE BOX

Refer to Figure AF–10.

AF-6.12.1 REMOVE KEYBOARD UNIT (KU) STOWAGE BOX

a. Remove keyboard from stowage box, if stowed.

b. Loosen four KU stowage box captive screws (2) until the captive screws move freely using a No. 2 cross-tip screwdriver.

c. Remove KU stowage box from ceiling mount or engine wall mount.

AF-6.12.2 REPLACE KEYBOARDUNIT (KU) STOWAGE BOX

a. Align four KU stowage box captive screws (2) with ceiling mount or engine wall mount installation holes.

b. Tighten four captive screws (2) using a No. 2 cross-tip screwdriver.

c. Stow keyboard, if necessary.

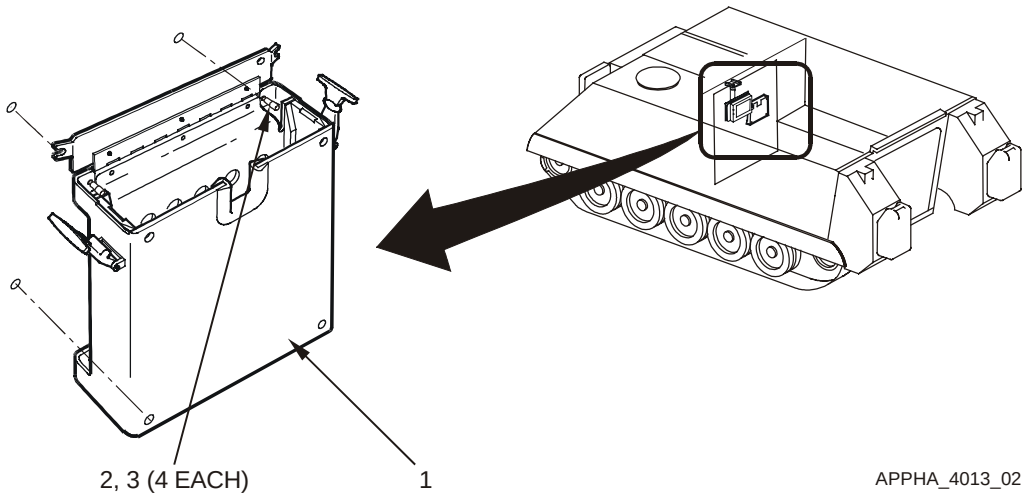

Figure AF–10. Remove and Replace Keyboard Unit (KU) Stowage Box

Key and Parts List for Figure AF–10.

ITEM NO.	NOMENCLATURE	CAGE CODE	PART NUMBER	NSN	QTY	SMR
1	Box, KU Stowage	0J198	872845-1	2540-01-481-5744	1	PAODD
2	Screw, Captive Panel	57177	PH207-05SS1032		4	PAOZZ
3	Retainer, Panel Screw	57177	214-03SS10-32		4	PAOZZ
--	Screw, Pan Head	80205	MS35206-229	5305-00-984-4989	14	PAOZZ
--	Washer, Flat	96906	MS27183-5	5310-00-983-8483	16	PAOZZ
--	Washer, Lock	96906	MS35338-41	5310-00-045-4007	13	PAOZZ
--	Case, Keyboard	0J198	872845-11		1	XBOOO
--	Bottom, Stowage Box	0J198	872845-12		1	XBOOO
--	Side Rail, Keyboard Box	0J198	872845-13		1	XBFFF
--	Side Rail, Keyboard Box	0J198	872845-14		1	XBFFF
--	Door, Keyboard Box	0J198	872845-15		1	XBFFF
--	Hinge, Keyboard Box	0J198	872845-16		1	XBFFF
--	Strip, Rubber	0J198	872845-17		1	XBFFF
--	Rivet, Solid, Csk	96906	MS20426AD-4-5	5320-00-117-6884	6	PAOZZ
--	Label, Keyboard Box	0J198	881323-1		1	PAOZZ
--	Nut, Plain	96906	MS35649-262	5310-00-934-9747	3	PAOZZ
--	Rubber Edge Trim	39428	8507K16	5325-01-435-2840	9	PAOZZ
--	Adhesive	04963	SCOTCH-GRIP RUB	8040-00-664-4318	1	PAOZZ
4	(KU stowage box door latch) Latch, Thumb	94222	37-20-071-20	5340-01-351-3340	2	PAOZZ
--	Marker, Exhaust Gas	80212	12350736	7690-01-222-7995	1	PAOZZ
--	Grip, Handle Assy	0J198	861867-1	5340-01-G72-7639	1	XBOOO
--	Grip, Handle	0J198	861869-1	5340-01-G72-7632	1	XBOZZ
--	Screw, Machine	96906	MS35206-228	5305-00-984-4988	4	PAOZZ
--	Washer, Lock	96906	MS35338-41	5310-00-045-4007	4	PAOZZ
--	Tape, Shielding, Elect	39428	7648A34		1	XBOZZ

AF-6.13 REMOVE/REPLACE KEYBOARD UNIT (KU) STOWAGE BOX DOOR LATCHES

Refer to Figure AF–11.

AD-6.13.1 REMOVE KEYBOARD UNIT (KU) STOWAGE BOX DOOR LATCHES

a. Pull rubber T-handles and unfasten KU stowage box door latches, if necessary.

b. Remove two pan head screws (1), lock washers (2) and flat washers (3) from each KU stowage box door latch (4) using a No. 2 cross-tip screwdriver.

c. Remove KU stowage box door latch (4).

AD-6.13.2 REPLACE KEYBOARD UNIT (KU) STOWAGE BOX DOOR LATCH

NOTE

The same KU stowage box door latch part is used for each side of the keyboard stowage box. There is a bumper on one side of the latch that should be positioned toward the side of the keyboard stowage box when fastened.

a. Align KU stowage box door latch mounting holes with mounting holes in KU stowage box.

b. Install and tighten two pan head screws (1), lock washers (2) and flat washers (3) for each KU stowage box door latch (4), using a No. 2 cross-tip screwdriver.

c. Pull rubber T-handles and fasten KU stowage box door latches.

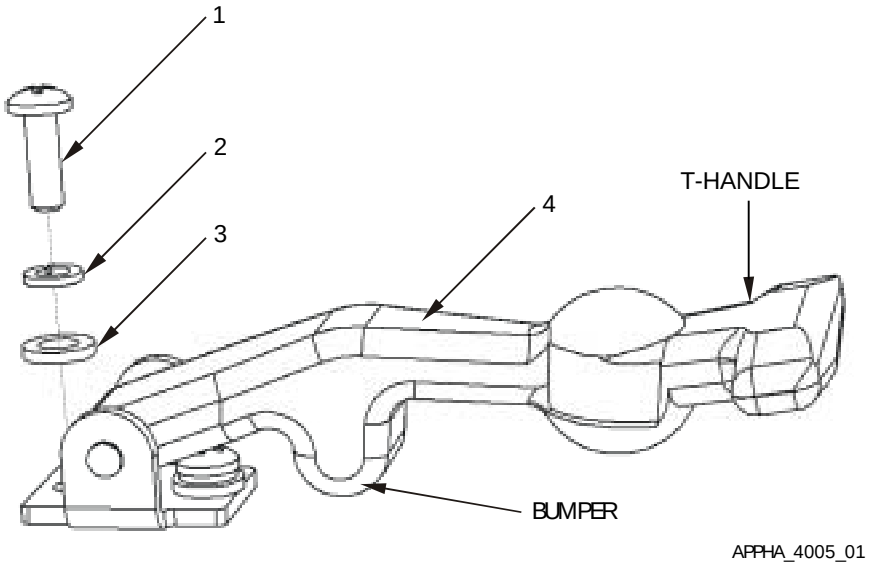

Figure AF–11. Remove and Replace Keyboard Unit (KU) Stowage Box Door Latch

Key and Parts List for Figure AF–11.

ITEM NO.	NOMENCLATURE	CAGE CODE	PART NUMBER	NSN	QTY	SMR
1	Screw, Pan Head	96906	MS35206-229	5305-00-984-4989	4	PAOZZ
2	Washer, Lock	96906	MS35338-41	5310-00-045-4007	4	PAOZZ
3	Washer, Flat	96906	MS27183-5	5310-00-983-8483	4	PAOZZ
4	(KU stowage box door latch) Latch, Thumb	94222	37-20-071-20	5340-01-351-3340	2	PAOZZ

APPENDIX AG

SUPPLEMENTARY INFORMATION FOR

Q36 HMMWV

TABLE OF CONTENTS

Page

AG–1 GENERAL AG–3

AG–2 COMPONENT ITEM NUMBERS AND PART NUMBERS AG–3

AG–3 SYSTEM INTERFACES AG–3

AG–3.1 MECHANICAL AG–3

AG–3.2 CABLE INTERFACES AG–4

AG–4 COMPONENT LOCATION AG–6

AG–4.1 GENERAL LOCATION AG–6

AG–4.2 MOUNTING AG–6

AG–5 PLATFORM-UNIQUE TROUBLESHOOTING AG–8

AG–6 REMOVAL/REPLACEMENT IN THE PLATFORM AG–8

AG–6.1 FUNCTIONAL CHECK AG–8

AG–6.2 REMOVE/REPLACE W1 POWER CABLE AG–9

AG–6.3 REMOVE/REPLACE W2 DISPLAY CABLE AG–11

AG–6.4 REMOVE/REPLACE W3 SERIAL INTERFACE ADAPTER DEVICE (SIAD) AG–13

AG–6.5 REMOVE/REPLACE W3P PLGR CABLE AG–14

AG–6.6 REMOVE/REPLACE W3N INC CABLE AG–15

AG–6.7 REMOVE/REPLACE W6 CABLE AG–17

AG–6.8 REMOVE/REPLACE PU ISOLATION ASSEMBLY AG–21

AG–6.9 REMOVE/REPLACE DU ISOLATION ASSEMBLY AG–24

AG–6.10 REMOVE/REPLACE RAM-BALL ASSEMBLY AG–27

AG–6.11 REMOVE/REPLACE PU CONNECTOR GUARD AG–30

LIST OF ILLUSTRATIONS

Page
Figure AG-1. Equipment Interface Block Diagram AG–5
Figure AG-2. Relative Component Locations AG–6
Figure AG-3. Top-Down View of Integrated Rack Mounted Components.....AG–7
Figure AG-4. Cable Run (Sheet 1of 2) AG–18
Figure AG-5. Cable Run (Sheet 2 of 2) AG–19
Figure AG-6. Remove and Replace PU Isolation Assembly AG–22
Figure AG-7. Remove and Replace DU Isolation Assembly AG–26
Figure AG-8. Remove and Replace RAM-Ball Assembly.....AG–29
Figure AG-9. Remove and Replace PU Connector Guard.....AG–30

AG–1 GENERAL

This appendix describes the interfaces between the FBCB2 equipment and the Q36 HMMWV with integrated rack (rack). This appendix also identifies the component parts of the Q36 HMMWV platform installation kit and details the removal and replacement procedures particular to the Q36 HMMWV vehicles with integrated racks.

AG–2 COMPONENT ITEM NUMBERS AND PART NUMBERS

Key and Parts List tables contained in the Removal and Replacement section of this Appendix serve a dual purpose. Use the Item Numbers in the Key to identify components and attaching hardware shown in the Figures illustrating the tasks. The nomenclature and part number for the hardware and equipment mounting components of the installation kit also are keyed to the Item Numbers in the tables. Additional parts ordering information, such as Contractor and Government Entity code (CAGE); National Stock Number (NSN); quantity; and Source, Maintenance, and Recoverability (SMR) codes, are provided. The Key and Parts List tables follow the task illustrations.

AG–3 SYSTEM INTERFACES

AG–3.1 MECHANICAL

The mechanical hardware-to-hardware interfaces include:

a. Cables

b. Processor Unit (PU)

c. Display Unit (DU)

d. Keyboard Unit (KU)

AG–3.2 CABLE INTERFACES

Figure AG-1 illustrates a block diagram of the interfaces between FBCB2 equipment and the Q36 HMMWV (Platform). Figure AG-1 also illustrates the signal and control interfaces along with the terminal connector labels (e.g., P1, P2). The purpose of each cable is listed below:

Cable Name	Purpose
W1–Cable	Supplies vehicle power to the AN/UYK-128(V) computer and its subassemblies.
W2–Cable	Supplies power and signals to the Display Unit (DU) and Keyboard Unit (KU). Returns Man Machine Interface (MMI) information from the KU to the Processor Unit (PU).
W3–Cable	The Serial Interface Adapter Device (SIAD) is a conduit assembly that breaks out each of the serial interface ports to a connector.
W3P–Cable	Collects position and time information from the PLGR.
W3EP–Cable	Collects position location information from the EPLRS.
W3N–Cable	Provides duplex communication between the PU, Internet Controller (INC) and radios. Since the INC & SINCGARS Radios are mounted in the rear of this Platform the W3N Cable connects to the bulkhead connector, and the W6 Cable provides the connection from the bulkhead connector to the SIAD.
W4–Cable	Audio cable (This cable is not used in this platform).
W5–Cable	The Expansion Interface Adapter Device (EIAD) is connected to the Universal Serial Bus (USB) connector only when this vehicle is to be used in a Tactical Operations Center (TOC) setup. When used in this configuration, the EIAD is connected between the PU J5 connector and local router.
W6–Cable	Connects the SIAD (PU) to the bulkhead connector. The INC & SINCGARS Radios input cable (W3N) is connected to the other side of the bulkhead connector.
Ground Strap	Provides safety ground for the PU.
Ground Strap	Provides safety ground for the DU.

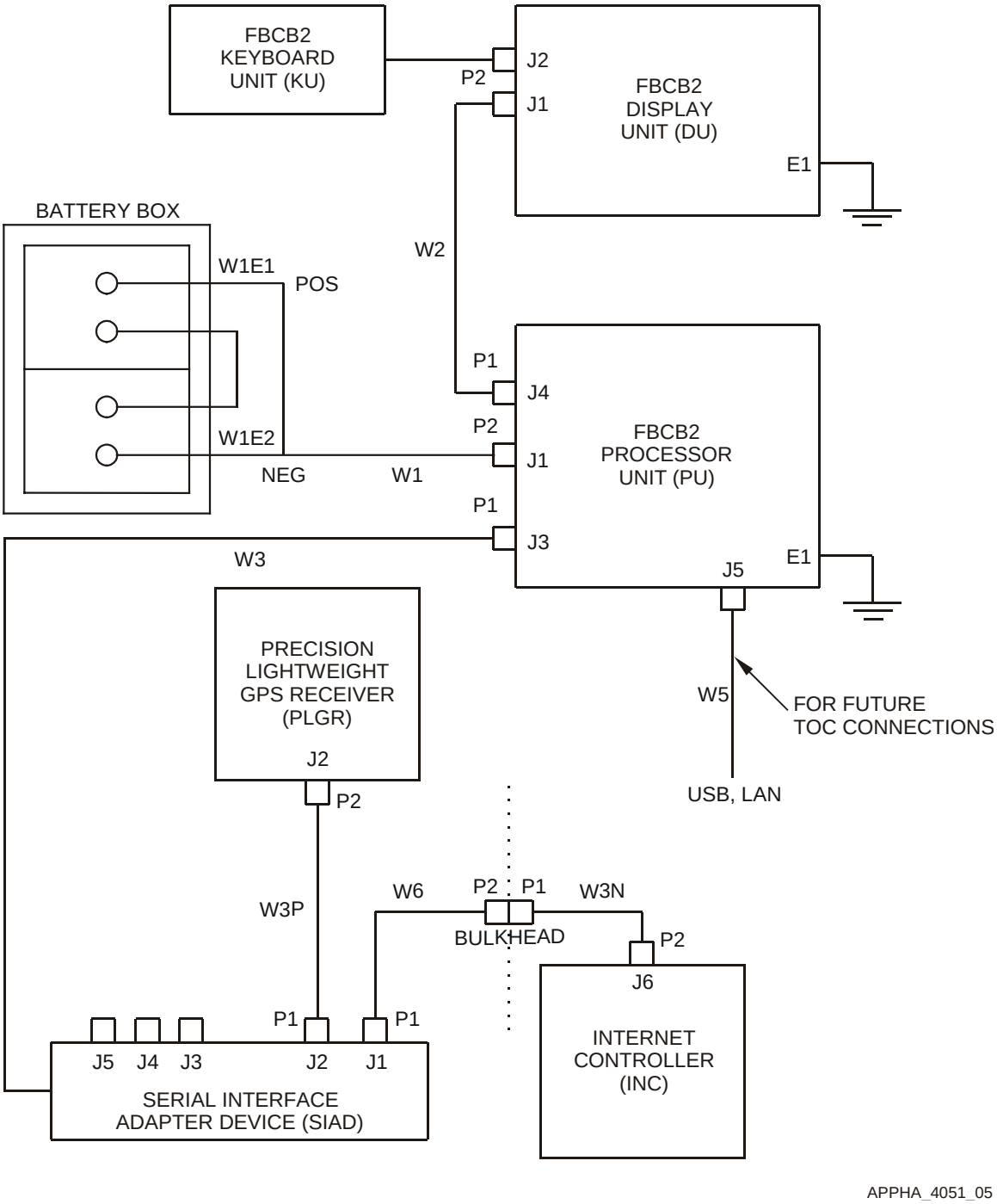

Figure AG-1. Equipment Interface Block Diagram

AG–4 COMPONENT LOCATION

AG–4.1 GENERAL LOCATION

Figure AG-2 shows the relative locations of the FBCB2 computer equipment and mounting components in the cab of the Q36 HMMWV vehicles.

AG–4.2 MOUNTING

Refer to Figure AG-3 for a Top-Down view to help define the location and mounting methodology.

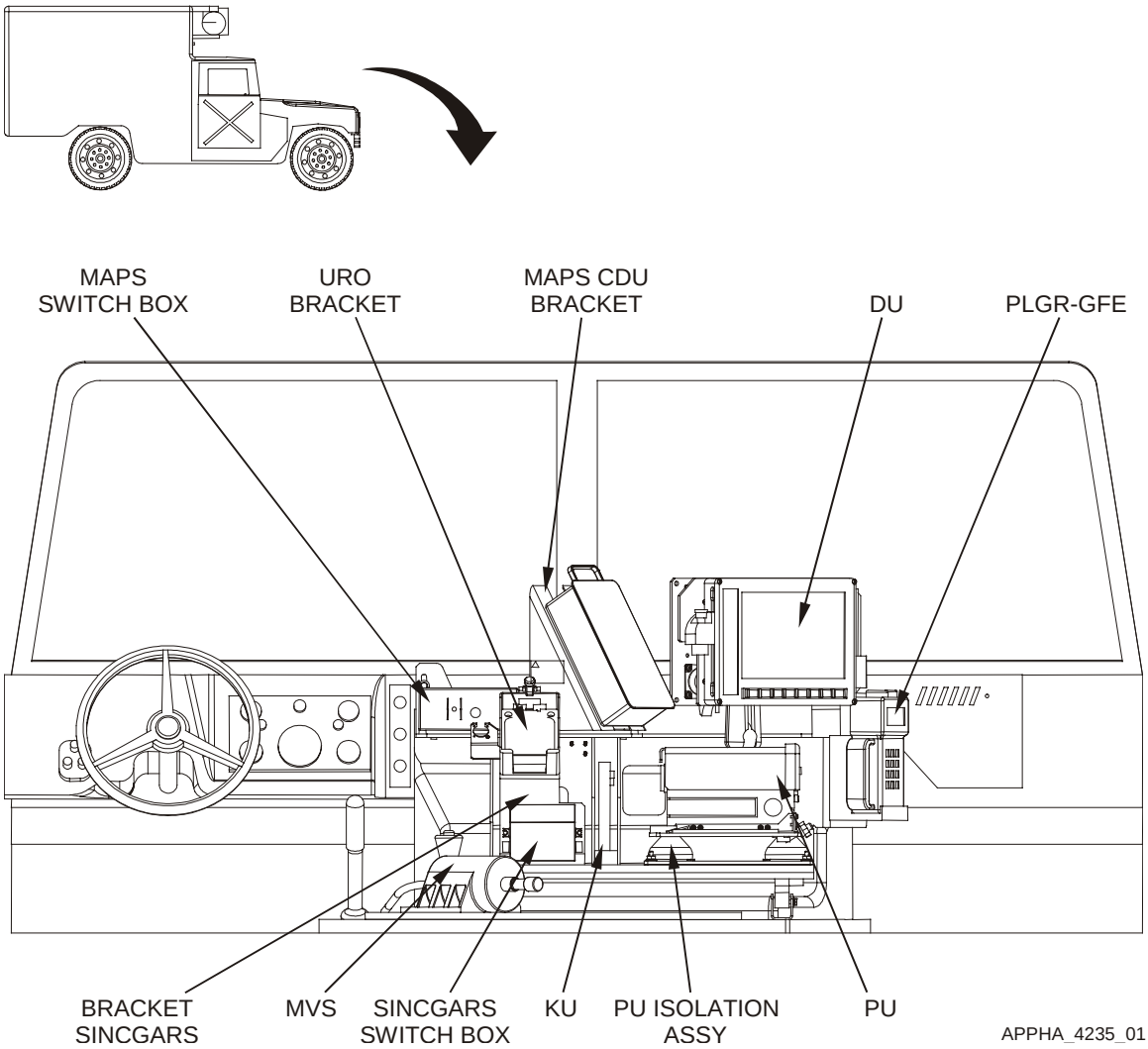

Figure AG-2. Relative Component Locations

AG–4.2.1 INTEGRATED RACK MOUNTING

Figure AG-3 illustrates a top-down view of the FBCB2 components mounted in the Integrated Rack.

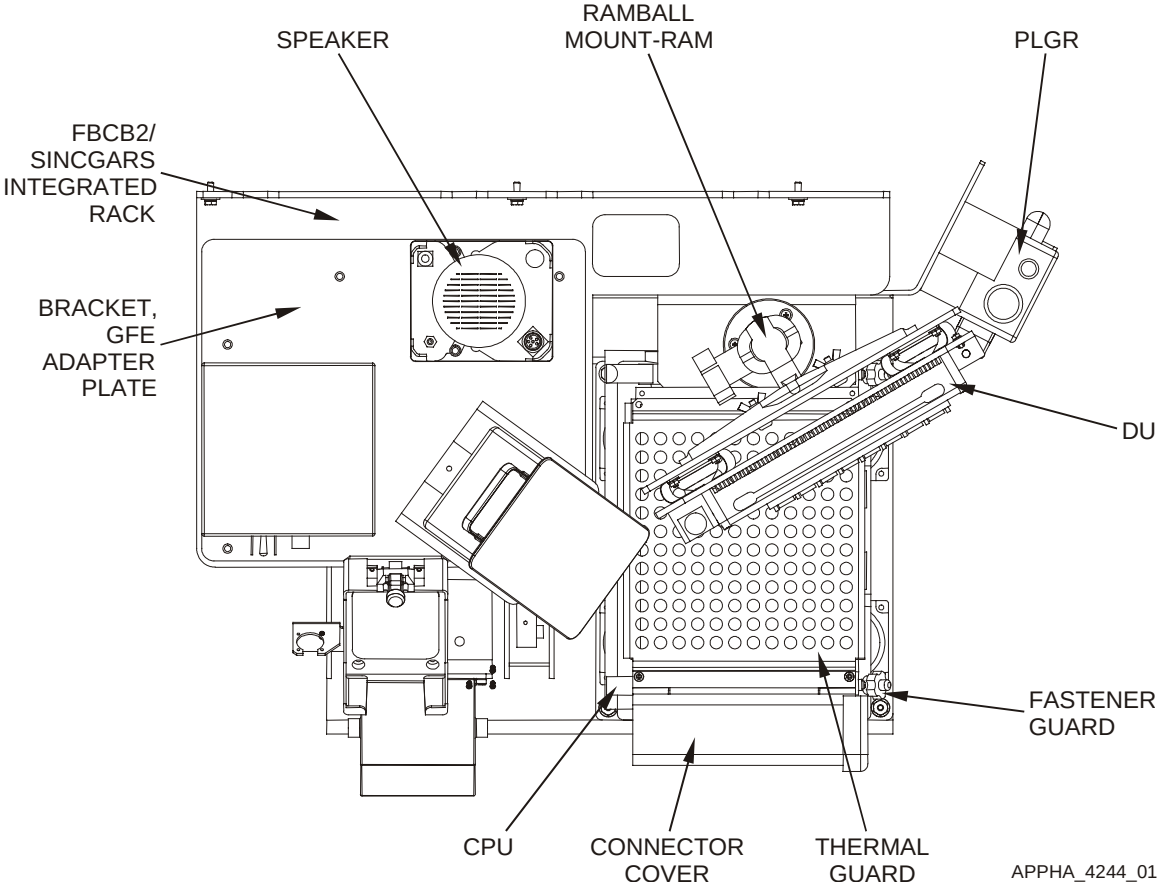

Figure AG-3. Top-Down View of Integrated Rack Mounted Components

AG–5 PLATFORM-UNIQUE TROUBLESHOOTING

There are no unique troubleshooting procedures for this vehicle.

AG–6 REMOVAL/REPLACEMENT IN THE PLATFORM

Most installations must be tailored to the platform. Cables and brackets are unique to the installation. Before a part or assembly is removed from a vehicle, fill out a “Maintenance Request” DA Form 2407. One copy of this completed form must remain with the vehicle and the remaining copies must be kept with the failed component. To prove the operability of the system after an item is replaced, perform the system Functional Check.

AG–6.1 FUNCTIONAL CHECK

AG–6.1.1 POWER UP

Power up and initialize all interface equipment and the AN/UYK-128(V) In Accordance With (IAW) the Operator’s Manual TM 11-7010-326-10, or Pocket Guide TB 11-7010-326-10.

AG–6.1.2 VERIFICATION

NOTE

Observe that the Display Unit PWR, DISP and CPU green LED lights are lit.

a. Observe that the PLGR synchronizes with PU, indicated by the PLGR dialog box showing green.

b. Observe that the Router synchronizes with the PU, indicated by the Router dialog box showing green.

c. At the Session Manager screen, select OPS button to display the OPS screen.

d. Verify the GPS status is either green or amber on the Classification/Status Bar.

e. Verify the Communications status is either green or amber on the Classification/Status Bar.

AG–6.1.3 POWER DOWN

Power down all interface equipment and the AN/UYK-128(V) IAW the Operator’s Manual TM 11-7010-326-10, or Pocket Guide TB 11-7010-326-10.

AG–6.2 REMOVE/REPLACE W1 POWER CABLE

Refer to Figure AG-4.

AG–6.2.1 REMOVE W1 POWER CABLE

WARNING

Before conducting maintenance involving the removal and replacement of system components, ensure that all power to the FBCB2 system is off (including power from the vehicle). Failure to comply with warning may result in equipment damage or injury to personnel.

a. Power down AN/UYK-128(V) system IAW Operator's Manual TM 11-7010-326-10, or Pocket Guide TB 11-7010-326-10.

b. Power down SINCGARS IAW TM 11-5820-890-10-8.

WARNING

The W1 power cable is connected to the vehicle battery. Electrical shock could occur if tool comes into contact with the battery box and electrical connection. Avoid contacting tools with battery box and electrical connection.

WARNING

Installers should use caution when connecting cables to the vehicle batteries. If proper procedures are not used batteries can spark, burn, weld, or explode.

c. Disconnect W1E1 (Positive Terminal) from Batteries in Battery Box located under the Curbside Seat.

d. Disconnect W1E2 (Negative Terminal) from Batteries in Battery Box located under the Curbside Seat.

e. Open PU connector guard (captive thumbscrew).

f. Disconnect W1-P2 cable connector from PU J1 connector.

g. Install protective cap on PU J1 connector.

h. Close PU connector guard.

NOTE

Note cable routing and tie-wrap locations before removing cable or tie-wraps.

i. Remove tie-wraps securing W1 cable using diagonal wire cutters.

j. Remove W1 power cable (1).

AG–6.2.2 REPLACE W1 POWER CABLE

a. Route W1 power cable (1).

b. Open PU connector guard (captive thumbscrew).

c. Remove protective cap from PU J1 connector.

WARNING

The W1 power cable is connected to the vehicle battery. Electrical shock could occur if tool comes into contact with the battery box and electrical connection. Avoid contacting tools with battery box and electrical connection.

WARNING

Installers should use caution when connecting cables to the vehicle batteries. If proper procedures are not used batteries can spark, burn, weld, or explode.

d. Connect W1-P2 cable connector to PU J1 connector.

e. Close PU connector guard.

f. Connect W1E2 (Negative Terminal) to the Batteries in Battery Box located under the Curbside Seat.

g. Connect W1E1 (Positive Terminal) to the Batteries in Battery Box located under the Curbside Seat.

h. Secure W1 cable using tie-wraps, as applicable.

i. Dress tie-wraps using diagonal wire cutters.

j. Perform Functional Check IAW paragraph AG–6.1.

AG–6.3 REMOVE/REPLACE W2 DISPLAY CABLE

Refer to Figure AG-4.

AG–6.3.1 REMOVE W2 DISPLAY CABLE

WARNING

Before conducting maintenance involving the removal and replacement of system components, ensure that all power to the FBCB2 system is off (including power from the vehicle). Failure to comply with warning may result in equipment damage or injury to personnel.

a. Power down AN/UYK-128(V) system IAW Operator's Manual TM 11-7010-326-10, or Pocket Guide TB 11-7010-326-10.

b. Open PU connector guard (captive thumbscrew).

c. Disconnect W2-P1 cable connector from PU J4 connector.

d. Install protective cap on PU J4 connector.

e. Close PU connector guard.

f. Disconnect W2-P2 cable connector from display J1 connector.

g. Install protective cap on display J1 connector.

NOTE

Note cable routing and tie-wrap locations before removing cable or tie-wraps.

h. Remove tie-wraps from W2 cable and ground strap using diagonal wire cutters.

NOTE

The PU ground strap may be wrapped around the W2 Display cable. If necessary, remove the ground strap from PU E1 CHAS ground stud to unwrap the ground strap from the W2 cable.

i. Disconnect ground strap from PU E1 CHAS ground stud, if necessary.

j. Remove W2 display cable (5).

AG–6.3.2 REPLACE W2 DISPLAY CABLE

a. Route W2 display cable (5).

b. Connect ground strap from PU E1 CHAS ground stud, if necessary.

c. Remove protective cap from display J1 connector.

d. Connect W2-P2 cable connector to display J1 connector.

e. Open PU connector guard (captive thumbscrew).

f. Remove protective cap from PU J4 connector.

g. Connect W2-P1 cable connector to PU J4 connector.

h. Close PU connector guard.

NOTE

To take up slack, the ground strap may be wrapped around the W2 cable before connecting it to E1 CHAS ground stud.

i. Secure W2 cable and ground strap to DU isolation assembly using tie-wraps.

j. Dress tie-wraps using diagonal wire cutters.

k. Perform Functional Check IAW paragraph AG–6.1.

AG–6.4 REMOVE/REPLACE W3 SERIAL INTERFACE ADAPTER DEVICE (SIAD)

Refer to Figure AG-4.

AG–6.4.1 REMOVE W3 SERIAL INTERFACE ADAPTER DEVICE (SIAD)

WARNING

Before conducting maintenance involving the removal and replacement of system components, ensure that all power to the FBCB2 system is off (including power from the vehicle). Failure to comply with warning may result in equipment damage or injury to personnel.

a. Power down AN/UYK-128(V) system IAW Operator's Manual TM 11-7010-326-10, or Pocket Guide TB 11-7010-326-10.

b. Disconnect W6-P1 cable connector from W3 SIAD J1 connector.

c. Disconnect W3P-P1 cable connector from W3 SIAD J2 connector.

d. Open PU connector guard (captive thumbscrew).

e. Disconnect W3 SIAD P1 connector from PU J3 connector.

f. Install protective cap on PU J3 connector.

g. Close PU connector guard.

NOTE

Note cable routing and tie-wrap locations before removing cable or tie-wraps.

h. Remove tie-wraps securing W3 SIAD using diagonal wire cutters.

i. Remove W3 SIAD (3).

AG–6.4.2 REPLACE W3 SERIAL INTERFACE ADAPTER DEVICE (SIAD)

a. Route W3 SIAD (3) into original position.

b. Open PU connector guard (captive thumbscrew).

c. Remove protective cap from PU J3 connector.

d. Connect W3 SIAD-P1 cable connector to PU J3 connector.

e. Close PU connector guard.

f. Connect W3P-P1 cable connector to W3 SIAD J2 connector.

g. Connect W6-P1 cable connector to W3 SIAD J1 connector.

h. Secure W3 SIAD using tie-wraps.

i. Dress tie-wraps using diagonal wire cutters.

j. Perform Functional Check IAW paragraph AG–6.1.

AG–6.5 REMOVE/REPLACE W3P PLGR CABLE

Refer to Figure AG-4.

AG–6.5.1 REMOVE W3P PLGR CABLE

WARNING

Before conducting maintenance involving the removal and replacement of system components, ensure that all power to the FBCB2 system is off (including power from the vehicle). Failure to comply with warning may result in equipment damage or injury to personnel.

a. Power down AN/UYK-128(V) system IAW Operator's Manual TM 11-7010-326-10, or Pocket Guide TB 11-7010-326-10.

b. Disconnect W3P-P1 cable connector from W3 SIAD J2 connector.

c. Remove PLGR from mount.

d. Disconnect W3P-P2 cable connector from PLGR J2 connector using offset flat screwdriver.

NOTE

Note cable routing and tie-wrap locations before removing cable or tie-wraps.

e. Remove tie-wraps securing W3P cable using diagonal wire cutters.

f. Remove W3P cable (2).

AG–6.5.2 REPLACE W3P PLGR CABLE

a. Route W3P cable (2).

b. Connect W3P-P2 cable connector to PLGR J2 connector using offset flat screwdriver.

c. Install PLGR in mount.

d. Connect W3P-P1 cable connector to W3 SIAD J2 connector.

e. Secure W3P cable using tie-wraps.

f. Dress tie-wraps using diagonal wire cutters.

g. Perform Functional Check IAW paragraph AG–6.1.

AG–6.6 REMOVE/REPLACE W3N INC CABLE

Refer to Figure AG-4 & Figure AG-5.

AG–6.6.1 REMOVE W3N INC CABLE

WARNING

Before conducting maintenance involving the removal and replacement of system components, ensure that all power to the FBCB2 system is off (including power from the vehicle). Failure to comply with warning may result in equipment damage or injury to personnel.

a. Power down AN/UYK-128(V) system IAW Operator's Manual TM 11-7010-326-10, or Pocket Guide TB 11-7010-326-10.

WARNING

Before removing capacitor & cable run covers verify that the vehicle 28 VDC power is **OFF.**

b. On DC Power Distribution Panel turn Battery Power 24 VDC switch to **OFF** (down position).

c. Remove Capacitor Access Cover by removing four screws (7) and lock washers (8) using No. 1 cross tip screwdriver

d. Remove forward outlet panel with 11 captive screws (9).

e. Disconnect W3N-P1 cable connector from the bulkhead connector.

f. Remove six cross tip screws (10) from cable run channels (curbside).

g. Remove W3 cable run channels covers.

h. Disconnect W3N-P2 cable connector from SINCGARS INC J6 connector.

NOTE

Note cable routing and tie-wrap locations before removing cable or tie-wraps.

i. Remove tie-wraps securing W3N cable using diagonal cutters.

j. Remove W3N cable (4).

AG–6.6.2 REPLACE W3N INC CABLE

a. Route W3N cable (4).

b. Connect W3N-P2 cable connector to SINCGARS INC J6 connector.

WARNING

Before installing capacitor & cable run covers verify that the vehicle 28 VDC power is **OFF.**

c. Connect by W3 cable run channels covers

d. Install six cross tip screws (10) into cable run channels (curbside).

e. Connect W3N-P1 cable connector to bulkhead connector.

f. Install forward outlet panel with 11 captive screws (9).

g. Install Capacitor Access Cover with four screws (7) and lock washers (8) using No. 1 cross tip screwdriver.

h. On DC Power Distribution Panel turn Battery Power 24 VDC switch to **ON** (up position).

i. Secure W3N cable using tie-wraps.

j. Dress tie-wraps using diagonal wire cutters.

k. Perform Functional Check IAW paragraph AG–6.1.

AG–6.7 REMOVE/REPLACE W6 CABLE

Refer to Figure AG-4 & Figure AG-5.

AG–6.7.1 REMOVE W6 CABLE

WARNING

Before conducting maintenance involving the removal and replacement of system components, ensure that all power to the FBCB2 system is off (including power from the vehicle). Failure to comply with warning may result in equipment damage or injury to personnel.

a. Power down AN/UYK-128(V) system IAW Operator's Manual TM 11-7010-326-10, or Pocket Guide TB 11-7010-326-10.

b. Disconnect W6-P1 cable connector from DU J2 connector.

c. Disconnect W6-P2 cable connector from the bulkhead P2 connector.

NOTE

Note cable routing and tie-wrap locations before removing cable or tie-wraps.

d. Remove tie-wraps securing W6 cable using diagonal cutters.

e. Remove W6 cable (6).

AG–6.7.2 REPLACE W6 CABLE

a. Route W6 cable (6).

b. Connect W6-P2 cable connector to bulkhead P2 connector.

c. Connect W6-P1 cable connector to DU J2 connector.

d. Secure W6 cable using tie-wraps.

e. Dress tie-wraps using diagonal wire cutters.

f. Perform Functional Check IAW paragraph AG–6.1.

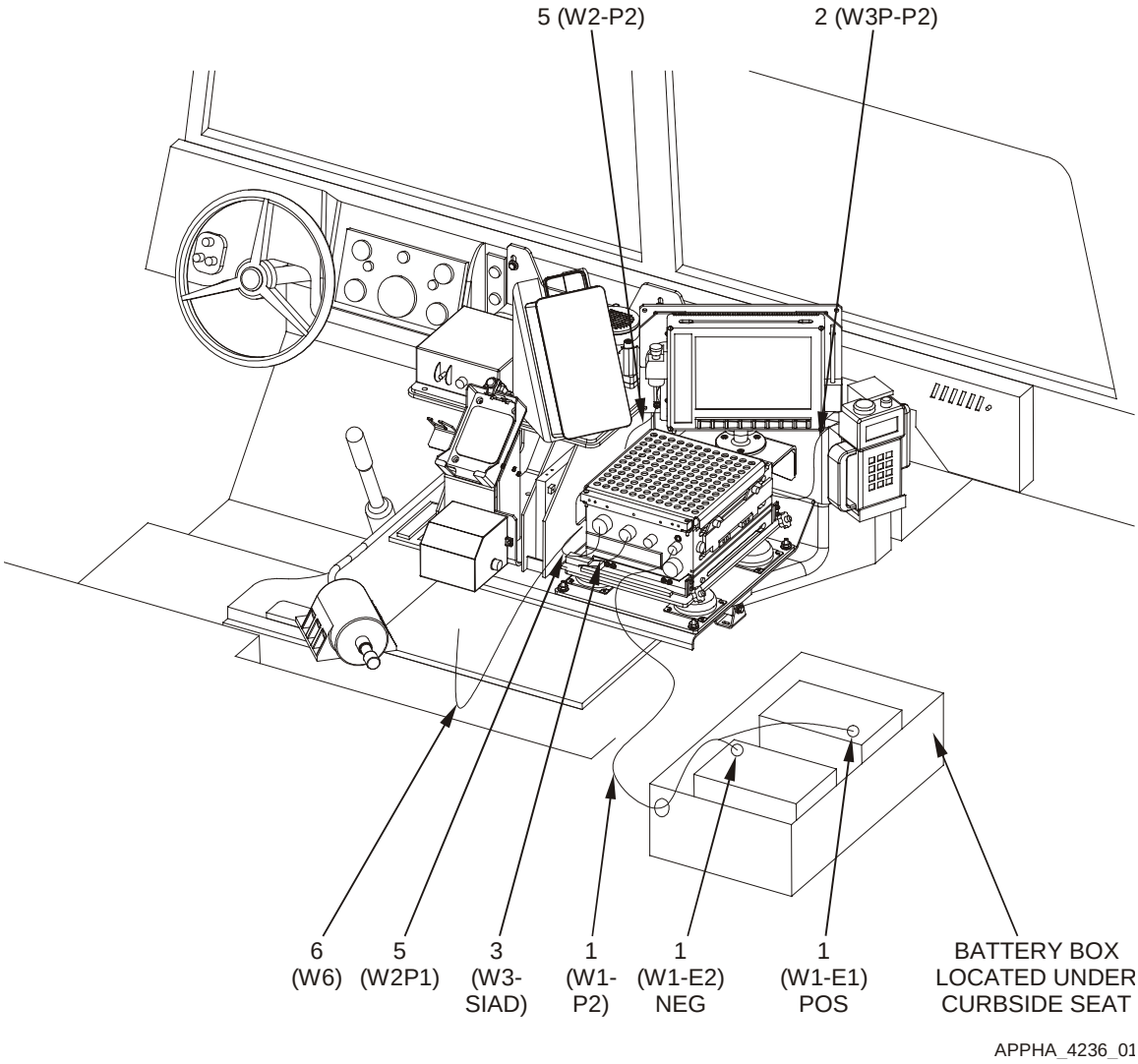

Figure AG-4. Cable Run (Sheet 1of 2)

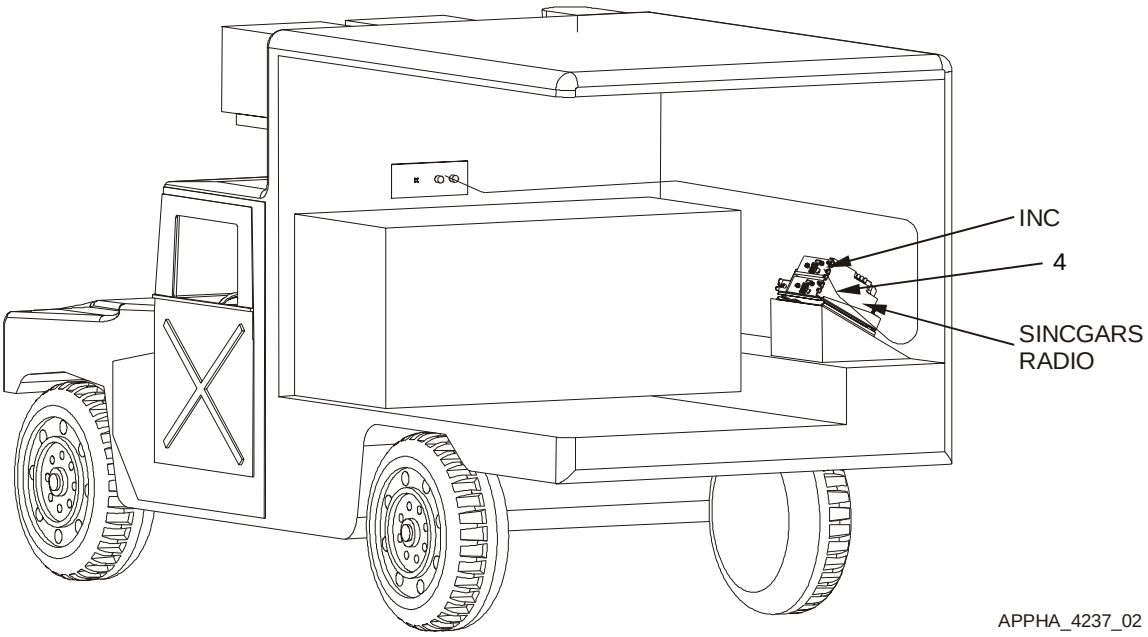

Figure AG-5. Cable Run (Sheet 2 of 2)

Key and Parts List for Figure AG-4 & Figure AG-5.

ITEM NO.	NOMENCLATURE	CAGE CODE	PART NUMBER	NSN	QTY	SMR
1	Cable Assembly W1	0J198	889520-1		1	PAOZZ
2	Cable Assembly W3P	0J198	881335-1	5995-01-478-4891	1	PAOZZ
3	Adapter Assy SIAD W3	0J198	881331-1	4920-01-478-3722	1	PAODD
4	Cable Assembly W3N	0J198	889577-1		1	PAODD
5	Cable Assembly W2	0J198	881327-1	5995-01-478-4876	1	PAOZZ
6	Cable Assembly W6	0J198	881289-3		1	PAODD
--	Strap, Tie Down, Elect	39428	7130K31		30	XBOZZ
--	Holder, Cable, Tie 2w	39428	7566K27		30	XBOZZ
7	Screw				4	
8	Lock Washer				4	
9	Captive Screw				11	
10	Screw, Cross Tip				6	

AG–6.8 REMOVE/REPLACE PU ISOLATION ASSEMBLY

Refer to Figure AG-6.

NOTE

Ground straps are attached to components at one end (PU and DU) and a frame ground at the other end. Regardless of where the ground strap terminates, it is usually a burnished (void of paint) area. If the ground strap is removed from a burnished area, make sure to return it to the same burnished area. Where applicable, always connect the ground strap first when assembling, and disconnect the ground strap last when disassembling.

AG–6.8.1 REMOVE PU ISOLATION ASSEMBLY

WARNING

Before conducting maintenance involving the removal and replacement of system components, ensure that all power to the FBCB2 system is off (including power from the vehicle). Failure to comply with warning may result in equipment damage or injury to personnel.

a. Power down AN/UYK-128(V) system IAW Operator's Manual TM 11-7010-326-10, or Pocket Guide TB 11-7010-326-10.

NOTE

Do not remove the Removable Hard Disk Drive Cartridge (RHDDC), locking bracket, or thermal guard (if installed) from PU.

b. Remove PU IAW Unit Maintenance Manual TM 11-7010-326-20&P.

c. Remove one hex head screw (2), lock washer (3), flat washer (4) and ground strap from PU Isolation Assembly (1) bottom plate using 7/16" socket with ratchet and 3" extension.

d. Remove remaining three hex head screws (2), lock washers (3) and flat washers (4) from PU Isolation Assembly (1) bottom plate using 7/16" socket with ratchet and 3" extension.

e. Remove PU Isolation Assembly (1) from rack.

AG–6.8.2 REPLACE PU ISOLATION ASSEMBLY

a. Align four PU Isolation Assembly (1) bottom plate holes with installation holds in mounting rack.

NOTE

To ensure positive ground, PU ground strap must make direct contact with bare metal. Ensure PU ground strap is installed in its original location at the PU isolation assembly bottom plate mounting hole. Slip the lock washer, flat washer and then the ground strap on the mounting screw before installing and tightening screw.

b. Install one hex head screw (2), lock washer (3), flat washer (4) and ground strap on PU Isolation Assembly (1) bottom plate using 7/16” socket with ratchet and 3” extension.

c. Install remaining three hex head screws (2), lock washers (3) and flat washers (4) using 7/16” socket with ratchet and 3” extension.

d. Install PU IAW Unit Maintenance Manual TM 11-7010-326-20&P.

e. Perform Functional Check IAW paragraph AG–6.1.

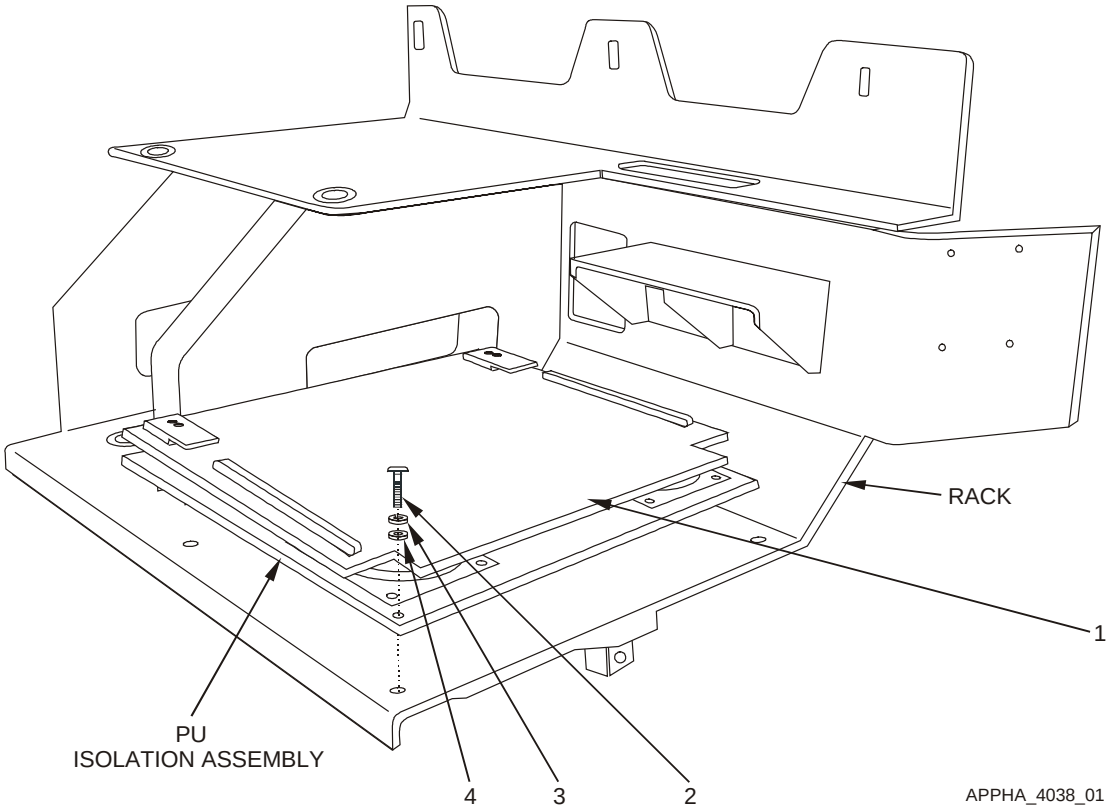

Figure AG-6. Remove and Replace PU Isolation Assembly

Key and Parts List for Figure AG-6.

ITEM NO.	NOMENCLATURE	CAGE CODE	PART NUMBER	NSN	QTY	SMR
1	(PU isolation assembly) Plate, Resilient Mount PU	0J198	872826-2	5340-01-481-5742	1	PAODD
2	Screw, Cap, Hexagon	80204	B1821AH025C100N	5305-01-389-7984	4	PAOZZ
3	Washer, Lock	96906	MS35338-44	5310-00-582-5965	4	PAOZZ
4	Washer, Flat	96906	MS27183-10	5310-00-809-4058	4	PAOZZ
--	Assembly, PU Lock	0J198	861865-1	5340-01-G72-7627	1	XBOOO
--	Bracket, Locking	0J198	861871-1	5340-01-G72-7628	1	XBOZZ
--	Screw	80205	MS35190-253	5305-00-05-4568	2	PAOZZ
--	Guard, Fastener	0J198	881328-1	9530-010G72-7796	1	PAOZZ
--	Thermal Guard Assy (if installed)	0J198	872860-1	5999-01-G72-7670	1	XBOOO
--	Thermal Guard	0J198	872860-11	5999-01-G72-7671	1	XBOZZ
--	Screw, Machine	96906	MS51958-63	5305-00-059-3659	4	PAOZZ
--	Grommet	63590	BG2903	5325-01-291-3383	4	PAOZZ
--	Retainer, Bolt	032U6	75-4119	5325-01-G72-7672	4	PAOZZ

AG–6.9 REMOVE/REPLACE DU ISOLATION ASSEMBLY

Refer to Figure AG-7.

NOTE

Ground straps are attached to components at one end (PU and DU) and a frame ground at the other end. Regardless of where the ground strap terminates, it is usually a burnished (void of paint) area. If the ground strap is removed from a burnished area, make sure to return it to the same burnished area. Where applicable, always connect the ground strap first when assembling, and disconnect the ground strap last when disassembling.

AG–6.9.1 REMOVE DU ISOLATION ASSEMBLY

WARNING

Before conducting maintenance involving the removal and replacement of system components, ensure that all power to the FBCB2 system is off (including power from the vehicle). Failure to comply with warning may result in equipment damage or injury to personnel.

a. Power down AN/UYK-128(V) system IAW, Operator's Manual TM 11-7010-326-10, or Pocket Guide TB 11-7010-326-10.

b. Remove DU IAW Unit Maintenance Manual TM 11-7010-326-20&P.

NOTE

Note cable routing and tie-wrap locations before removing cable or tie-wraps.

c. Remove tie-wraps securing W2 display cable and ground strap to DU Isolation Assembly using diagonal wire cutters.

d. Loosen RAM-Ball knob while supporting DU Isolation Assembly (1) until RAM-Ball display base with ball can be lifted free of RAM-Ball socket arm.

NOTE

Ground straps are attached to components at one end (PU and DU) and a frame ground at the other end. Regardless of where the ground strap terminates, it is usually a burnished (void of paint) area. If the ground strap is removed from a burnished area, make sure to return it to the same burnished area. Where applicable, always connect the ground strap first when assembling, and disconnect the ground strap last when disassembling.

e. Remove one self-locking wing nut (4), ground strap, spacer (3) and square neck bolt (2) from RAM-Ball display base with ball and DU Isolation Assembly (1) bottom plate.

f. Remove the remaining three self-locking wing nuts (4), spacers (3) and square neck bolts (2) from RAM-Ball display base with ball and DU Isolation Assembly (1) bottom plate.

g. Remove DU Isolation Assembly (1) from RAM-Ball display base with ball.

AG–6.9.2 REPLACE DU ISOLATION ASSEMBLY

a. Obtain the replacement DU Isolation Assembly (1).

b. Align four RAM-Ball display base with ball installation holes with slots in the DU Isolation Assembly (1) bottom plate.

NOTE

Ground straps are attached to components at one end (PU and DU) and a frame ground at the other end. Regardless of where the ground strap terminates, it is usually a burnished (void of paint) area. If the ground strap is removed from a burnished area, make sure to return it to the same burnished area. Where applicable, always connect the ground strap first when assembling, and disconnect the ground strap last when disassembling.

c. Install one square neck bolt (2), ground strap, spacer (3) and self-locking wing nut (4) on RAM-Ball display base with ball and DU Isolation Assembly (1) bottom plate.

d. Install the remaining three square neck bolts (2), spacers (3) and self-locking wing nuts (4) on RAM-Ball display base with ball and DU Isolation Assembly (1) bottom plate.

CAUTION

Ensure RAM-Ball is free of dirt and contaminants before reassembling. Failure to comply can result in slippage or excess wear of RAM-Ball assembly.

e. Inspect and clean RAM-Ball socket arm and display base with ball, as necessary, using clean lint-free wipes.

f. Insert RAM-Ball display base with ball into RAM-Ball socket arm.

g. Adjust viewing angle and tighten RAM-Ball knob.

h. Secure W2 display cable and ground strap to DU Isolation Assembly (1) bottom plate using tie-wraps.

i. Dress tie-wrap using diagonal wire cutters.

j. Install DU IAW Unit Maintenance Manual TM 11-7010-326-20&P.

k. Perform Functional Check IAW paragraph AG–6.1.

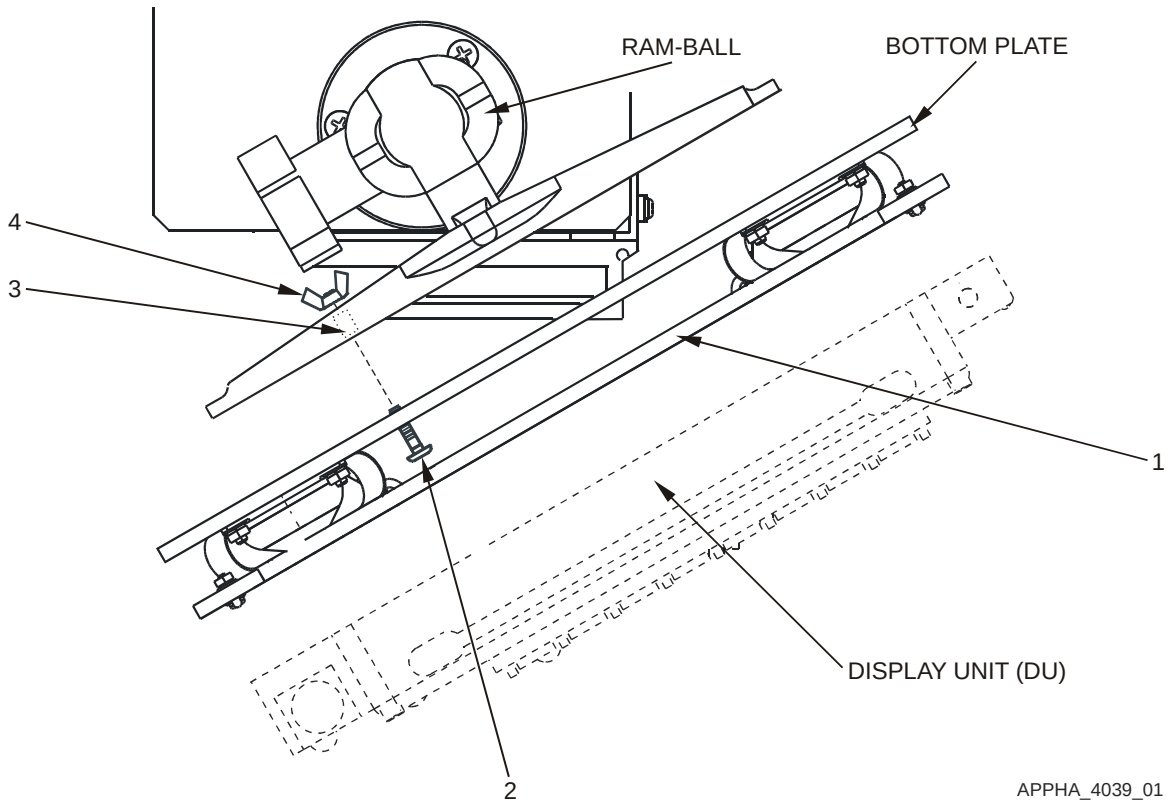

Figure AG-7. Remove and Replace DU Isolation Assembly

Key and Parts List for Figure AG-7.

ITEM NO.	NOMENCLATURE	CAGE CODE	PART NUMBER	NSN	QTY	SMR
1	(DU isolation assembly) Plate, Resilient Mount DU	0J198	872870-1	5340-01-481-5757	1	PAODD
2	Bolt, Square Neck	96906	MS35751-17	5306-00-889-2943	4	PAOZZ
3	Spacer, Aluminum	57177	10705AL315C	5365-01-G72-7642	4	PAOZZ
4	Nut, Self-Locking, Wing	96906	MS51553-420	5310-01-384-2546	4	PAOZZ
--	Strap, Tie Down, Elect	39428	7130K31	5975-01-G72-7634	6	PAOZZ
--	Assembly, DU Lock	0J198	872843-1	5340-01-G72-7629	1	XBOOO
--	Bracket, Locking	0J198	861871-3	5340-01-G72-7630	1	PAOZZ
--	Washer, Lock	96906	MS35338-42	5310-00-045-3299	2	PAOZZ
--	Screw	80205	MS35190-253	5305-00-059-4568	2	PAOZZ

AG–6.10 REMOVE/REPLACE RAM-BALL ASSEMBLY

Refer to Figure AG-8.

NOTE

Ground straps are attached to components at one end (PU and DU) and a frame ground at the other end. Regardless of where the ground strap terminates, it is usually a burnished (void of paint) area. If the ground strap is removed from a burnished area, make sure to return it to the same burnished area. Where applicable, always connect the ground strap first when assembling, and disconnect the ground strap last when disassembling.

AG–6.10.1 REMOVE RAM-BALL ASSEMBLY

WARNING

Before conducting maintenance involving the removal and replacement of system components, ensure that all power to the FBCB2 system is off (including power from the vehicle). Failure to comply with warning may result in equipment damage or injury to personnel.

a. Power down AN/UYK-128(V) system IAW Operator's Manual TM 11-7010-326-10, or Pocket Guide TB 11-7010-326-10.

b. Remove DU IAW Unit Maintenance Manual TM 11-7010-326-20&P.

NOTE

Note cable routing and tie-wrap locations before removing cable or tie-wraps.

c. Remove tie-wraps securing W2 display cable and ground strap to DU Isolation Assembly using diagonal wire cutters.

d. Loosen RAM-Ball knob while supporting DU Isolation Assembly until RAM-Ball display base with ball can be lifted free of RAM-Ball socket arm

NOTE

Ground straps are attached to components at one end (PU and DU) and a frame ground at the other end. Regardless of where the ground strap terminates, it is usually a burnished (void of paint) area. If the ground strap is removed from a burnished area, make sure to return it to the same burnished area. Where applicable, always connect the ground strap first when assembling, and disconnect the ground strap last when disassembling.

e. Remove one self-locking wing nut (8), ground strap, spacer (7) and square neck bolt (6) from Ram-Ball display base with ball and DU Isolation Assembly bottom plate.

f. Remove the remaining three self-locking wing nuts (8), spacers (7) and square neck bolts (6) from Ram-Ball display base with ball and DU Isolation Assembly bottom plate.

g. Remove RAM-Ball socket arm from RAM-Ball mounting base with ball on display support bracket.

AG-6.10-1 REMOVE RAM-BALL ASSEMBLY (Continued)

h. Loosen the PU self-locking front retainers.

i. Slide PU forward to gain access to RAM-Ball mounting base with ball mounting bolts and nuts.

j. Remove three machine bolts (5), flat washers (2), lock washers (3) and hex nuts (4) from RAM-Ball mounting base with ball and display support bracket using a 7/16” open end wrench and No. 3 cross-tip screwdriver.

AG–6.10.2 REPLACE RAM-BALL ASSEMBLY

a. Align three holes in RAM-Ball mounting base with ball with display support bracket installation holes.

b. Install machine bolts (5), flat washers (2), lock washers (3) and hex nuts (4) using a 7/16” open end wrench and No. 3 cross-tip screwdriver.

c. Slide PU back into place and secure with self-locking front retainers.

CAUTION

Ensure RAM-Ball is free of dirt and contaminants before reassembling. Failure to comply can result in slippage or excess wear of RAM-Ball assembly.

d. Inspect and clean RAM-Ball socket are, display and mounting base with ball, as necessary, using clean lint-free wipes.

e. Install RAM-Ball socket arm on RAM-Ball mounting base with ball.

f. Align four holes in RAM-Ball display base with ball with slots in DU isolation assembly bottom plate.

NOTE

Ground straps are attached to components at one end (PU and DU) and a frame ground at the other end. Regardless of where the ground strap terminates, it is usually a burnished (void of paint) area. If the ground strap is removed from a burnished area, make sure to return it to the same burnished area. Where applicable, always connect the ground strap first when assembling, and disconnect the ground strap last when disassembling.

g. Install one square neck bolt (6), ground strap, spacer (7) and self-locking wing nut (8) on Ram-Ball display base with ball and DU isolation assembly bottom plate.

h. Install the remaining three square neck bolts (6), spacers (7) and self-locking wing nuts (8) on Ram-Ball display base with ball and DU isolation assembly bottom plate.

i. Insert RAM-Ball display base with ball into RAM-Ball socket arm.

j. Adjust viewing angle and tighten RAM-Ball knob.

k. Secure W2 display cable and ground strap to DU isolation assembly using tie-wraps.

l. Dress tie-wraps using diagonal wire cutters.

m. Install DU IAW Unit Maintenance Manual TM 11-7010-326-20&P.

n. Perform Functional Check IAW paragraph AG–6.1.

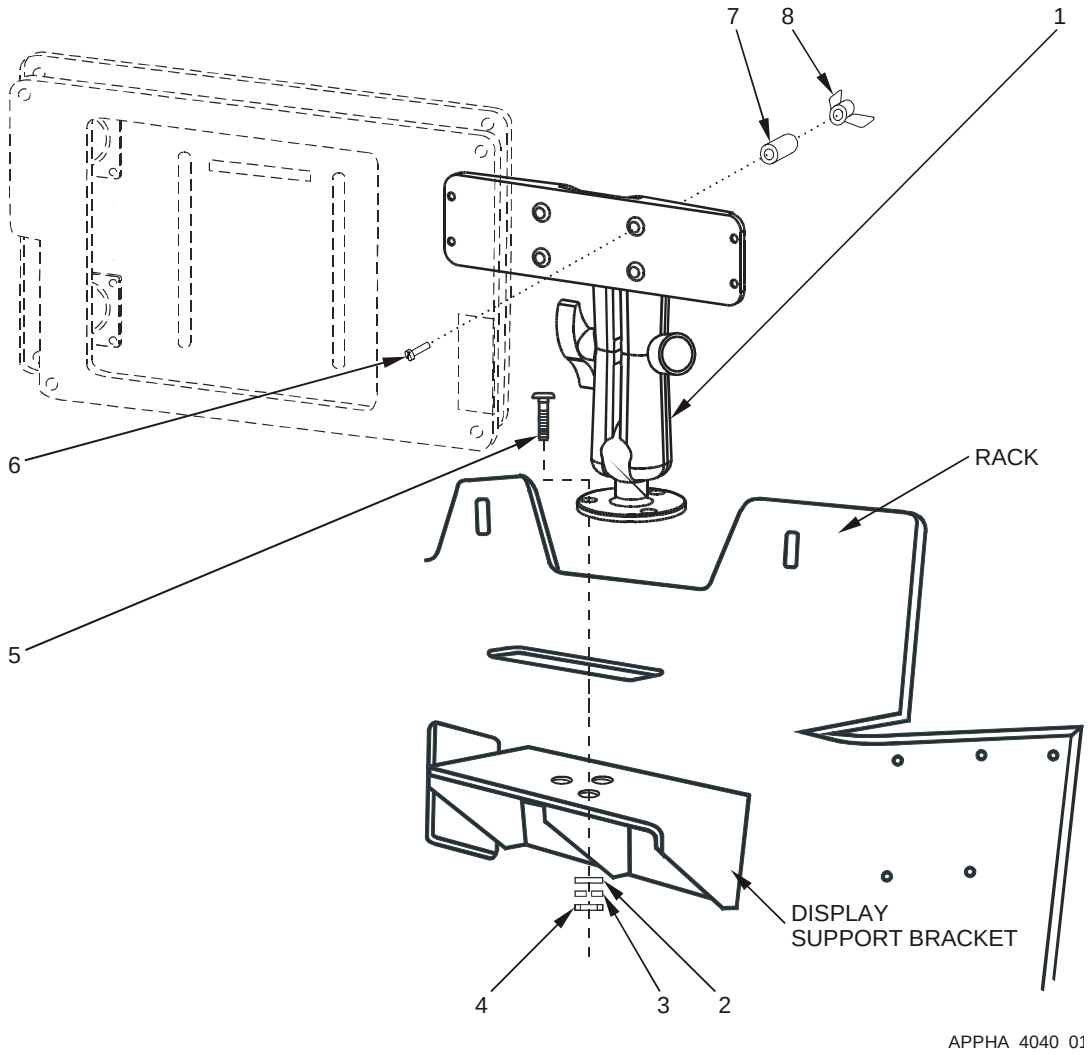

Figure AG-8. Remove and Replace RAM-Ball Assembly

Key and Parts List for Figure AG-8.

ITEM NO.	NOMENCLATURE	CAGE CODE	PART NUMBER	NSN	QTY	SMR
1	(RAM-Ball assembly) Mount , RAM-Ball	0J198	889489-1	5975-01-G72-7641	1	PAOZZ
2	Washer, Flat	96906	MS27183-10	5310-00-809-4058	3	PAOZZ
3	Washer, Lock	96906	MS35338-44	5310-00-582-5965	3	PAOZZ
4	Nut, Plain, Hexagon	96906	MS35649-2252	5310-00-997-1888	3	PAOZZ
5	Bolt, Machine	96906	MS35190-291	5306-00-042-6921	3	PAOZZ
6	Bolt, Square Neck	96906	MS35751-17	5306-00-889-2943	4	PAOZZ
7	Spacer, Aluminum	57177	10705AL315C	5365-01-G72-7642	4	PAOZZ
8	Nut, Self-Locking, Wing	96906	MS51553-420	5310-01-384-2546	4	PAOZZ
--	Strap, Tie Down, Elect	39428	7130K31	5975-01-G72-7634	6	XBOZZ

AG–6.11 REMOVE/REPLACE PU CONNECTOR GUARD

Refer to Figure AG-9.

AG–6.11.1 REMOVE PU CONNECTOR GUARD

a. Loosen PU connector guard captive thumbscrew.

b. Loosen two PU connector guard captive screws until the captive screws move freely using a No. 2 cross-tip screwdriver.

c. Remove PU connector guard from PU.

AG–6.11.2 REPLACE PU CONNECTOR GUARD

a. Align two PU connector guard mounting holes with PU mounting holes.

b. Tighten two captive screws using a No. 2 cross-tip screwdriver.

c. Tighten PU connector guard captive thumbscrew.

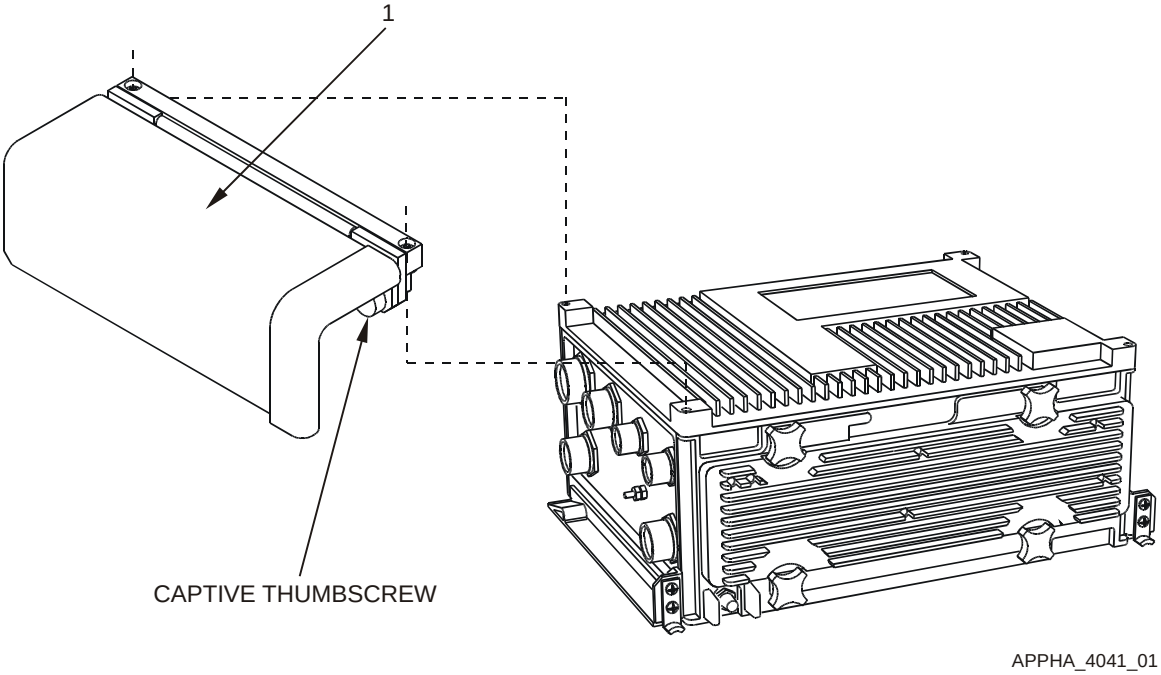

Figure AG-9. Remove and Replace PU Connector Guard

Key and Parts List for Figure AG-9.

ITEM NO.	NOMENCLATURE	CAGE CODE	PART NUMBER	NSN	QTY	SMR
1	(DU connector guard) Cover, Connector DU	0J198	872861-1		1	XBOOO

APPENDIX AH

SUPPLEMENTARY INFORMATION FOR

M1113 ECV HMMWV

TABLE OF CONTENTS

		Page
AH–1	GENERAL	AH–3
AH–2	COMPONENT ITEM NUMBERS AND PART NUMBERS	AH–3
AH–3	SYSTEM INTERFACES	AH–3
AH–3.1	MECHANICAL	AH–3
AH–3.2	CABLE INTERFACES	AH–4
AH–4	COMPONENT LOCATION	AH–6
AH–4.1	GENERAL LOCATION	AH–6
AH–4.2	MOUNTING	AH–6
AH–5	PLATFORM-UNIQUE TROUBLESHOOTING	AH–8
AH–6	REMOVAL/REPLACEMENT IN THE PLATFORM	AH–8
AH–6.1	FUNCTIONAL CHECK	AH–8
AH–6.2	REMOVE/REPLACE W1 POWER CABLE	AH–9
AH–6.3	REMOVE/REPLACE W2 DISPLAY CABLE	AH–10
AH–6.4	REMOVE/REPLACE W3 SERIAL INTERFACE ADAPTER DEVICE (SIAD)	AH–12
AH–6.5	REMOVE/REPLACE W3P PLGR CABLE	AH–13
AH–6.6	REMOVE/REPLACE W3N INC CABLE	AH–14
AH–6.7	REMOVE/REPLACE PU ISOLATION ASSEMBLY	AH–17
AH–6.8	REMOVE/REPLACE DU ISOLATION ASSEMBLY	AH–20
AH–6.9	REMOVE/REPLACE KEYBOARD UNIT (KU) STOWAGE BOX	AH–23
AH–6.10	REMOVE/REPLACE RAM-BALL ASSEMBLY	AH–24

LIST OF ILLUSTRATIONS

Page
Figure AH-1. Equipment Interface Block Diagram AH–5
Figure AH-2. Relative Component Locations AH–6
Figure AH-3. Top-Down View of Integrated Rack Mounted Components AH–7
Figure AH-4. Cable Run AH–15
Figure AH-5. Remove and Replace PU Isolation Assembly AH–18
Figure AH-6. Remove and Replace DU Isolation Assembly AH–22
Figure AH-7. Remove and Replace Keyboard Unit (KU) Stowage Box AH–23
Figure AH-8. Remove and Replace RAM-Ball Assembly AH–26

AH–1 GENERAL

This appendix describes the interfaces between the FBCB2 equipment and the M1113 ECV HMMWV with integrated rack (rack). This appendix also identifies the component parts of the M1113 ECV HMMWV platform installation kit and details the removal and replacement procedures particular to the M1113 ECV HMMWV vehicles with integrated racks.

AH–2 COMPONENT ITEM NUMBERS AND PART NUMBERS

Key and Parts List tables contained in the Removal and Replacement section of this Appendix serve a dual purpose. Use the Item Numbers in the Key to identify components and attaching hardware shown in the Figures illustrating the tasks. The nomenclature and part number for the hardware and equipment mounting components of the installation kit also are keyed to the Item Numbers in the tables. Additional parts ordering information, such as Contractor and Government Entity code (CAGE); National Stock Number (NSN); quantity; and Source, Maintenance, and Recoverability (SMR) codes, are provided. The Key and Parts List tables follow the task illustrations.

AH–3 SYSTEM INTERFACES

AH–3.1 MECHANICAL

The mechanical hardware-to-hardware interfaces include:

a. Cables

b. Processor Unit (PU)

c. Display Unit (DU)

d. Keyboard Unit (KU)

AH–3.2 CABLE INTERFACES

Figure AH-1 illustrates a block diagram of the interfaces between FBCB2 equipment and the M1113 ECV HMMWV (Platform). Figure AH-1 also illustrates the signal and control interfaces along with the terminal connector labels (e.g., P1, P2). The purpose of each cable is listed below:

Cable Name	Purpose
W1–Cable	Supplies vehicle power to the AN/UYK-128(V) computer and its subassemblies.
W2–Cable	Supplies power and signals to the Display Unit (DU) and Keyboard Unit (KU). Returns Man Machine Interface (MMI) information from the KU to the Processor Unit (PU).
W3–Cable	The Serial Interface Adapter Device (SIAD) is a conduit assembly that breaks out each of the serial interface ports to a connector.
W3P–Cable	Collects position and time information from the PLGR.
W3N–Cable	Provides duplex communication between the PU, Internet Controller (INC) and radios.
W4–Cable	Audio cable (This cable is not used in this platform).
W5–Cable	The Expansion Interface Adapter Device (EIAD) is connected to the Universal Serial Bus (USB) connector only when this vehicle is to be used in a Tactical Operations Center (TOC) setup. When used in this configuration, it is connected between the PU J5 connector and local router.
Ground Strap	Provides safety ground for the PU.
Ground Strap	Provides safety ground for the DU.

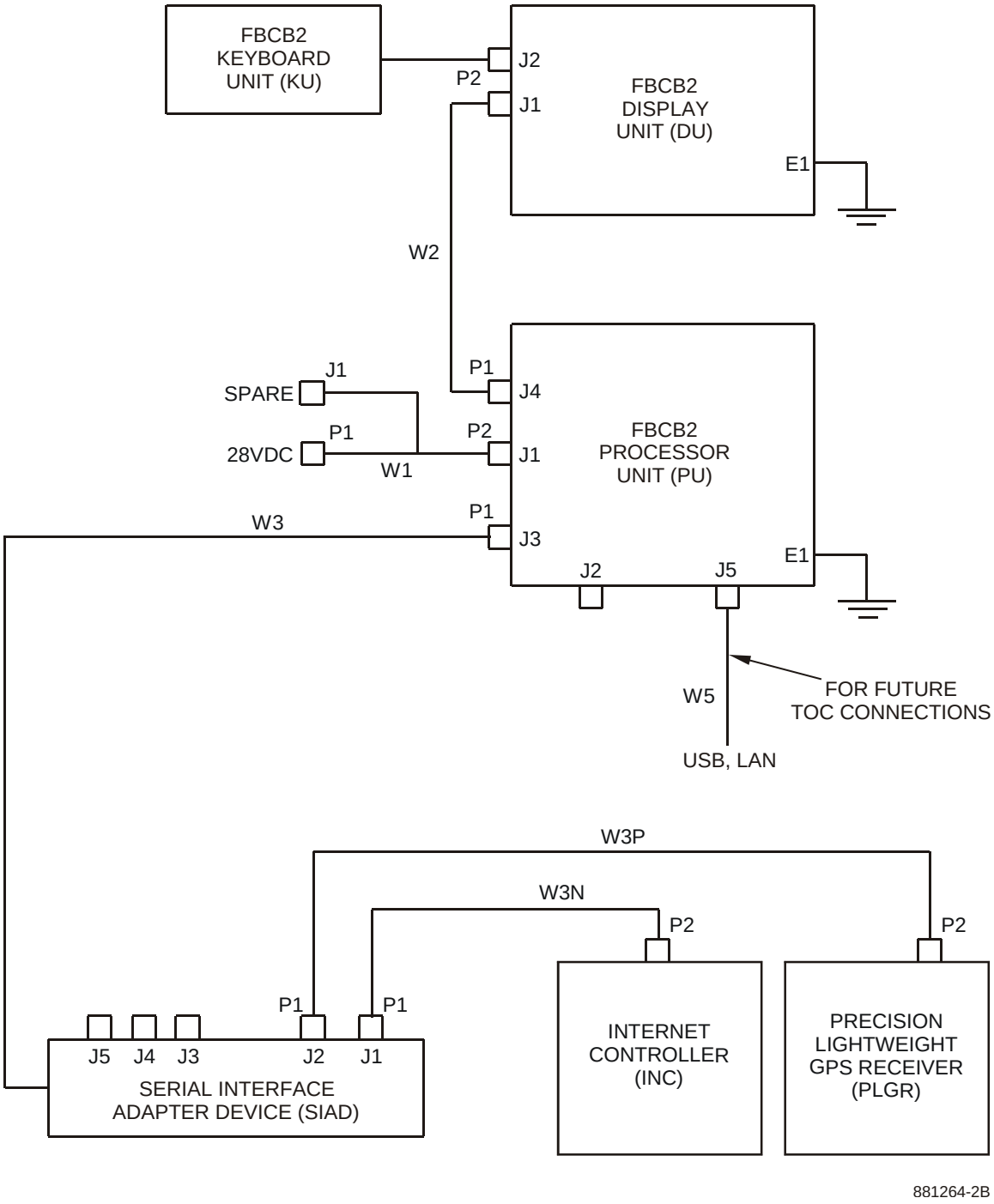

Figure AH-1. Equipment Interface Block Diagram

AH–4 COMPONENT LOCATION

AH–4.1 GENERAL LOCATION

Figure AH-2 shows the relative locations of the FBCB2 computer equipment and mounting components in the cab of the M1113 ECV HMMWV vehicles.

AH–4.2 MOUNTING

The integrated rack containing most of the FBCB2 computer equipment is located between the driver and passenger, with the forward part of the rack against the dashboard. AN/UYK-128(V) equipment and the SINCGARS share this common rack. Refer to Figure AH-3 for a Top-Down view to help define the location and mounting methodology.

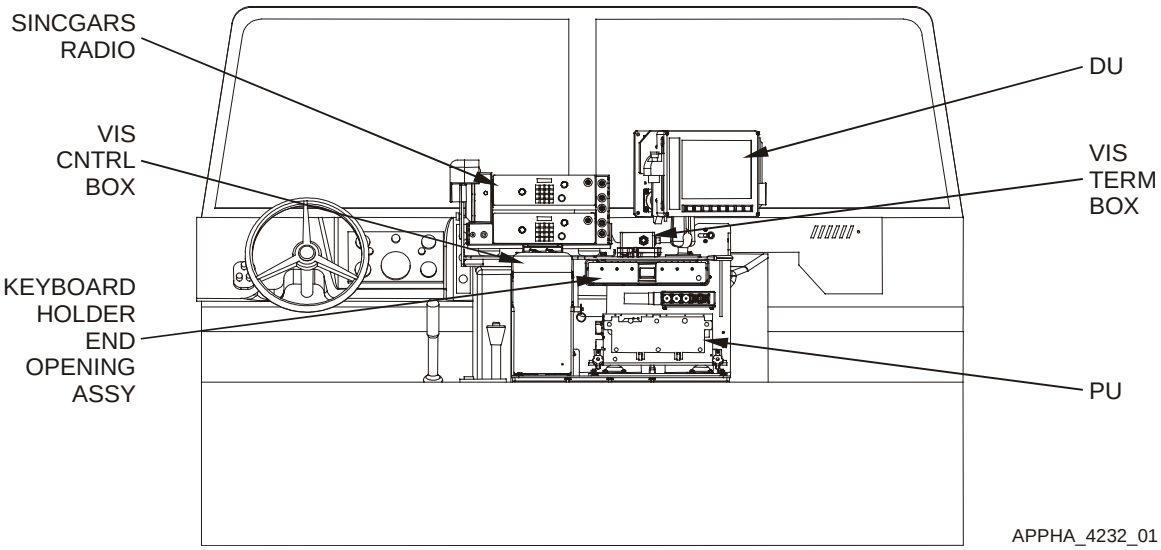

Figure AH-2. Relative Component Locations

AH–4.2.1 INTEGRATED RACK MOUNTING

Figure AH-3 illustrates a top-down view of the FBCB2 components mounted in the Integrated Rack.

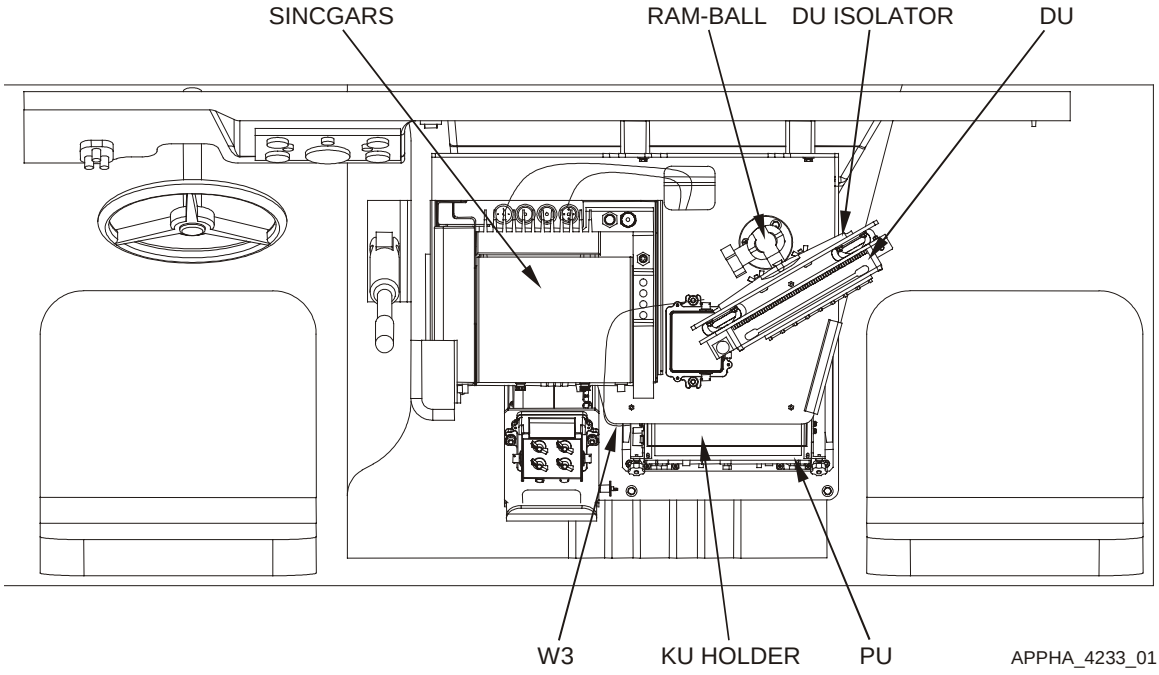

Figure AH-3. Top-Down View of Integrated Rack Mounted Components

AH–5 PLATFORM-UNIQUE TROUBLESHOOTING

There are no unique troubleshooting procedures for this vehicle.

AH–6 REMOVAL/REPLACEMENT IN THE PLATFORM

Most installations must be tailored to the platform. Cables and brackets are unique to the installation. Before a part or assembly is removed from a vehicle, fill out a “Maintenance Request” DA Form 2407. One copy of this completed form must remain with the vehicle and the remaining copies must be kept with the failed component. To prove the operability of the system after an item is replaced, perform the system Functional Check.

AH–6.1 FUNCTIONAL CHECK

AH–6.1.1 POWER UP

Power up and initialize all interface equipment and the AN/UYK-128(V) In Accordance With (IAW) the Operator’s Manual TM 11-7010-326-10, or Pocket Guide TB 11-7010-326-10.

AH–6.1.2 VERIFICATION

NOTE

Observe that the Display Unit PWR, DISP and CPU green LED lights are lit.

a. Observe that the PLGR synchronizes with PU, indicated by the PLGR dialog box showing green.

b. Observe that the Router synchronizes with the PU, indicated by the Router dialog box showing green.

c. At the Session Manager screen, select OPS button to display the OPS screen.

d. Verify the GPS status is either green or amber on the Classification/Status Bar.

e. Verify the Communications status is either green or amber on the Classification/Status Bar.

AH–6.1.3 POWER DOWN

Power down all interface equipment and the AN/UYK-128(V) IAW the Operator’s Manual TM 11-7010-326-10, or Pocket Guide TB 11-7010-326-10.

AH–6.2 REMOVE/REPLACE W1 POWER CABLE

Refer to Figure AH-4.

AH–6.2.1 REMOVE W1 POWER CABLE

WARNING

Before conducting maintenance involving the removal and replacement of system components, ensure that all power to the FBCB2 system is off (including power from the vehicle). Failure to comply with warning may result in equipment damage or injury to personnel.

a. Power down AN/UYK-128(V) system IAW Operator's Manual TM 11-7010-326-10, or Pocket Guide TB 11-7010-326-10.

b. Power down SINCGARS IAW TM 11-5820-890-10-8.

c. Unlatch and slide the Vehicle Amplifier-Adapter (VAA) AM-7239/VRC forward to access W1-P1 power cable connector.

d. Disconnect W1-P1 cable connector from the SINCGARS Mounting Base (MB) (MT-6352/VRC) A4-J2 connector.

e. Open PU connector guard (captive thumbscrew).

f. Disconnect W1-P2 cable connector from PU J1 connector.

g. Install protective cap on PU J1 connector.

h. Close PU connector guard.

NOTE

Note cable routing and tie-wrap locations before removing cable or tie-wraps.

i. Remove tie-wraps securing W1 cable using diagonal wire cutters.

j. Remove W1 power cable (1).

AH–6.2.2 REPLACE W1 POWER CABLE

a. Route W1 power cable (1).

b. Open PU connector guard (captive thumbscrew).

c. Remove protective cap from PU J1 connector.

d. Connect W1-P2 cable connector to PU J1 connector.

e. Close PU connector guard.

f. Connect W1-P1 cable connector to SINCGARS Mounting Base (MB) (MT-6352/VRC) A4-J2 connector.

g. Secure VAA, AM-7239/VRC in original mounting position on integrated rack.

h. Secure W1 cable using tie-wraps, as applicable.

i. Dress tie-wraps using diagonal wire cutters.

j. Perform Functional Check IAW paragraph AH–6.1.

AH–6.3 REMOVE/REPLACE W2 DISPLAY CABLE

Refer to Figure AH-4.

AH–6.3.1 REMOVE W2 DISPLAY CABLE

WARNING

Before conducting maintenance involving the removal and replacement of system components, ensure that all power to the FBCB2 system is off (including power from the vehicle). Failure to comply with warning may result in equipment damage or injury to personnel.

a. Power down AN/UYK-128(V) system IAW Operator's Manual TM 11-7010-326-10, or Pocket Guide TB 11-7010-326-10.

b. Open PU connector guard (captive thumbscrew).

c. Disconnect W2-P1 cable connector from PU J4 connector.

d. Install protective cap on PU J4 connector.

e. Close PU connector guard.

f. Disconnect W2-P2 cable connector from display J1 connector.

g. Install protective cap on display J1 connector.

NOTE

Note cable routing and tie-wrap locations before removing cable or tie-wraps.

h. Remove tie-wraps from W2 cable and ground strap using diagonal wire cutters.

NOTE

The PU ground strap may be wrapped around the W2 Display cable. If necessary, remove the ground strap from PU E1 CHAS ground stud to unwrap the ground strap from the W2 cable.

i. Disconnect ground strap from PU E1 CHAS ground stud, if necessary.

j. Remove W2 display cable (5).

AH–6.3.2 REPLACE W2 DISPLAY CABLE

a. Route W2 display cable (5).

b. Remove protective cap from display J1 connector.

c. Connect W2-P2 cable connector to display J1 connector.

d. Open PU connector guard (captive thumbscrew).

e. Remove protective cap from PU J4 connector.

f. Connect W2-P1 cable connector to PU J4 connector.

g. Close PU connector guard.

NOTE

To take up slack, the ground strap may be wrapped around the W2 cable before connecting it to E1 CHAS ground stud.

h. Connect ground strap to PU E1 CHAS ground stud, if removed.

i. Secure W2 cable and ground strap to DU isolation assembly using tie-wraps.

j. Dress tie-wraps using diagonal wire cutters.

k. Perform Functional Check IAW paragraph AH–6.1.

AH–6.4 REMOVE/REPLACE W3 SERIAL INTERFACE ADAPTER DEVICE (SIAD)

Refer to Figure AH-4.

AH–6.4.1 REMOVE W3 SERIAL INTERFACE ADAPTER DEVICE (SIAD)

WARNING

Before conducting maintenance involving the removal and replacement of system components, ensure that all power to the FBCB2 system is off (including power from the vehicle). Failure to comply with warning may result in equipment damage or injury to personnel.

a. Power down AN/UYK-128(V) system IAW Operator's Manual TM 11-7010-326-10, or Pocket Guide TB 11-7010-326-10.

b. Disconnect W3N-P1 cable connector from W3 SIAD J1 connector.

c. Disconnect W3P-P1 cable connector from W3 SIAD J2 connector.

d. Disconnect W3EP-P2 EPLRS cable connector from W3 SIAD J6 connector, if necessary.

e. Open PU connector guard (captive thumbscrew).

f. Disconnect W3 SIAD P1 connector from PU J3 connector.

g. Install protective cap on PU J3 connector.

h. Close PU connector guard.

NOTE

Note cable routing and tie-wrap locations before removing cable or tie-wraps.

i. Remove tie-wraps securing W3 SIAD using diagonal wire cutters.

j. Remove W3 SIAD (3).

AH–6.4.2 REPLACE W3 SERIAL INTERFACE ADAPTER DEVICE (SIAD)

a. Route W3 SIAD (3) into original position.

b. Open PU connector guard (captive thumbscrew).

c. Remove protective cap from PU J3 connector.

d. Connect W3 SIAD-P1 cable connector to PU J3 connector.

e. Close PU connector guard.

f. Connect W3EP-P2 EPLRS cable connector to W3 SIAD J6 connector, if necessary.

g. Connect W3P-P1 cable connector to W3 SIAD J2 connector.

h. Connect W3N-P1 cable connector to W3 SIAD J1 connector.

i. Secure W3 SIAD using tie-wraps.

j. Dress tie-wraps using diagonal wire cutters.

k. Perform Functional Check IAW paragraph AH–6.1.

AH–6.5 REMOVE/REPLACE W3P PLGR CABLE

Refer to Figure AH-4.

AH–6.5.1 REMOVE W3P PLGR CABLE

WARNING

Before conducting maintenance involving the removal and replacement of system components, ensure that all power to the FBCB2 system is off (including power from the vehicle). Failure to comply with warning may result in equipment damage or injury to personnel.

a. Power down AN/UYK-128(V) system IAW Operator's Manual TM 11-7010-326-10, or Pocket Guide TB 11-7010-326-10.

b. Disconnect W3P-P1 cable connector from W3 SIAD J2 connector.

c. Remove PLGR from mount.

d. Disconnect W3P-P2 cable connector from PLGR J2 connector using offset flat screwdriver.

NOTE

Note cable routing and tie-wrap locations before removing cable or tie-wraps.

e. Remove tie-wraps securing W3P cable using diagonal wire cutters.

f. Remove W3P cable (2).

AH–6.5.2 REPLACE W3P PLGR CABLE

a. Route W3P cable (2).

b. Connect W3P-P2 cable connector to PLGR J2 connector using offset flat screwdriver.

c. Install PLGR in mount.

d. Connect W3P-P1 cable connector to W3 SIAD J2 connector.

e. Secure W3P cable using tie-wraps.

f. Dress tie-wraps using diagonal wire cutters.

g. Perform Functional Check IAW paragraph AH–6.1.

AH–6.6 REMOVE/REPLACE W3N INC CABLE

Refer to Figure AH-4.

AH–6.6.1 REMOVE W3N INC CABLE

WARNING

Before conducting maintenance involving the removal and replacement of system components, ensure that all power to the FBCB2 system is off (including power from the vehicle). Failure to comply with warning may result in equipment damage or injury to personnel.

a. Power down AN/UYK-128(V) system IAW Operator's Manual TM 11-7010-326-10, or Pocket Guide TB 11-7010-326-10.

b. Disconnect W3N-P1 cable connector from W3 SIAD J1 connector.

c. Disconnect W3N-P2 cable connector from SINCGARS INC J6 connector.

NOTE

Note cable routing and tie-wrap locations before removing cable or tie-wraps.

d. Remove tie-wraps securing W3N cable using diagonal cutters.

e. Remove W3N cable (4).

AH–6.6.2 REPLACE W3N INC CABLE

a. Route W3N cable (4).

b. Connect W3N-P2 cable connector to SINCGARS INC J6 connector.

c. Connect W3N-P1 cable connector to W3 SIAD J1 connector.

d. Secure W3N cable using tie-wraps.

e. Dress tie-wraps using diagonal wire cutters.

f. Perform Functional Check IAW paragraph AH–6.1.

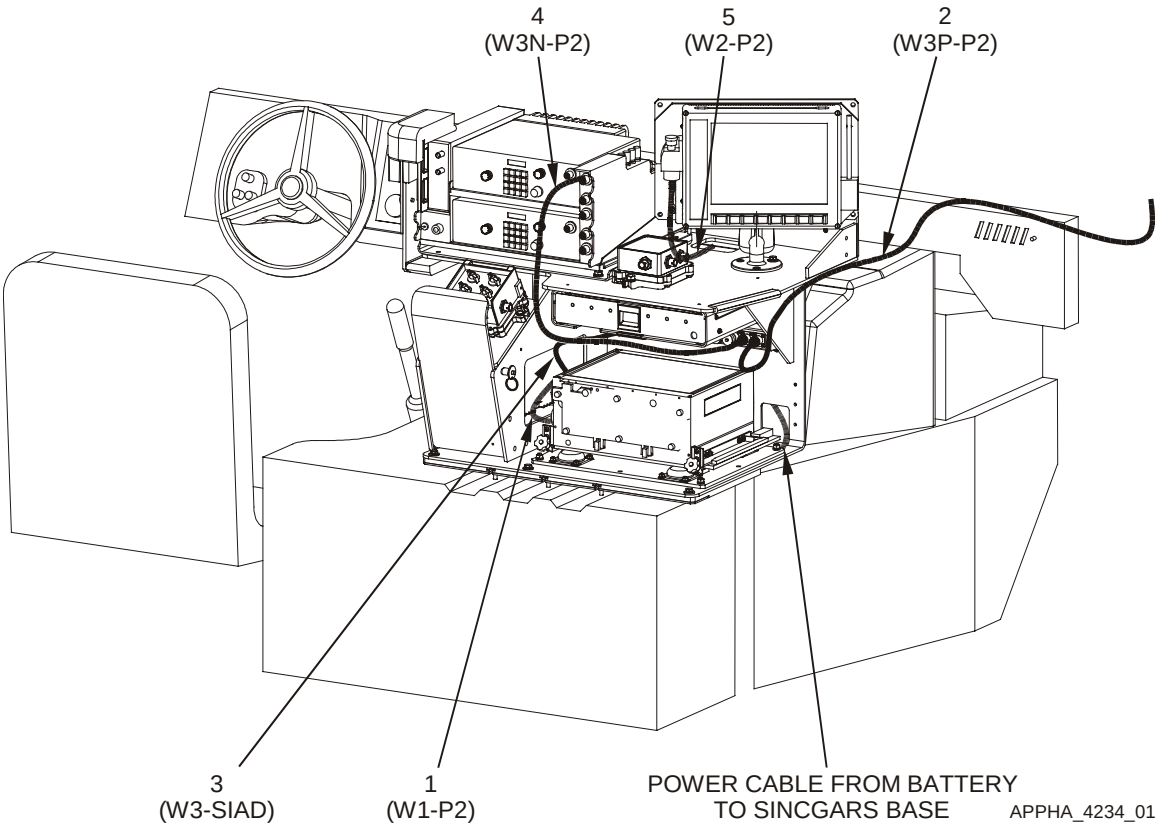

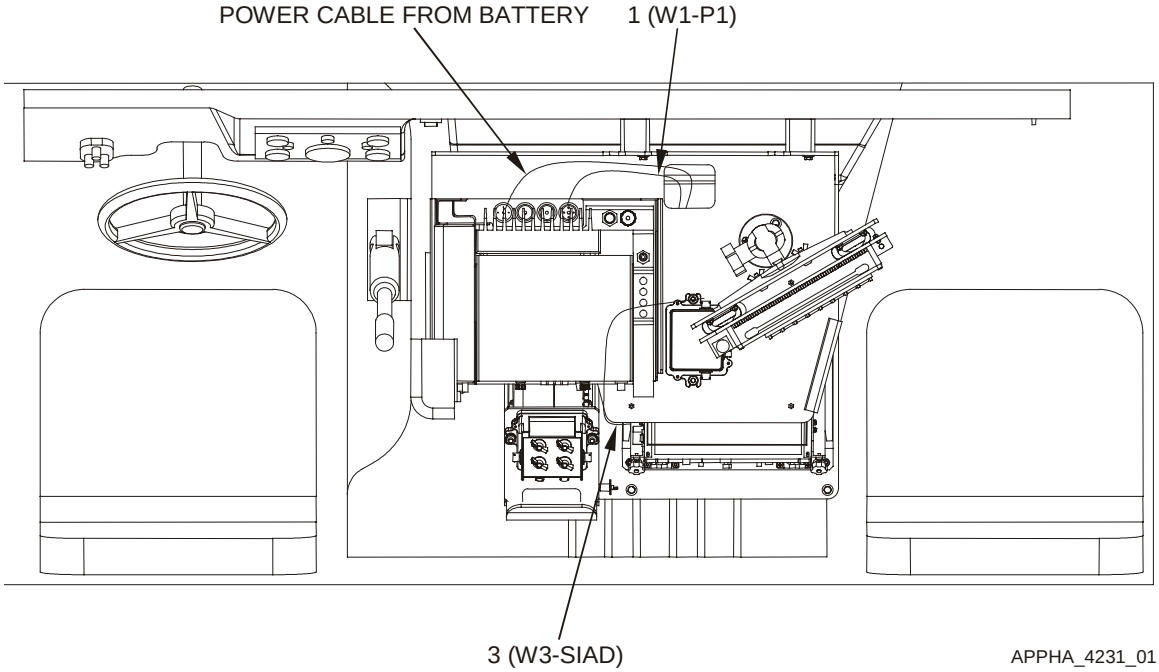

Figure AH-4. Cable Run

Key and Parts List for Figure AH-4.

ITEM NO.	NOMENCLATURE	CAGE CODE	PART NUMBER	NSN	QTY	SMR
1	Cable Assembly W1	0J198	866003-3	5995-01-478-4908	1	PAOZZ
2	Cable Assembly W3P	0J198	881335-2	5995-01-478-4893	1	PAOZZ
3	Adapter Assy SIAD W3	0J198	881331-1	4920-01-478-3722	1	PAODD
4	Cable Assembly W3N	0J198	881336-1	5995-01-478-4913	1	PAOZZ
5	Cable Assembly W2	0J198	881327-1	5995-01-478-4876	1	PAOZZ
--	Strap, Tie Down, Elect	39428	7130K31		30	XBOZZ
--	Holder, Cable, Tie 2w	39428	7566K27		30	XBOZZ

AH–6.7 REMOVE/REPLACE PU ISOLATION ASSEMBLY

Refer to Figure AH-5.

NOTE

Ground straps are attached to components at one end (PU and DU) and a frame ground at the other end. Regardless of where the ground strap terminates, it is usually a burnished (void of paint) area. If the ground strap is removed from a burnished area, make sure to return it to the same burnished area. Where applicable, always connect the ground strap first when assembling, and disconnect the ground strap last when disassembling.

AH–6.7.1 REMOVE PU ISOLATION ASSEMBLY

WARNING

Before conducting maintenance involving the removal and replacement of system components, ensure that all power to the FBCB2 system is off (including power from the vehicle). Failure to comply with warning may result in equipment damage or injury to personnel.

a. Power down AN/UYK-128(V) system IAW Operator's Manual TM 11-7010-326-10, or Pocket Guide TB 11-7010-326-10.

NOTE

Do not remove the Removable Hard Disk Drive Cartridge (RHDDC), locking bracket, or thermal guard (if installed) from PU.

b. Remove PU IAW Unit Maintenance Manual TM 11-7010-326-20&P.

c. Remove one hex head screw (2), lock washer (3), flat washer (4) and ground strap from PU isolation assembly (1) bottom plate using 7/16" socket with ratchet and 3" extension.

d. Remove remaining three hex head screws (2), lock washers (3) and flat washers (4) from PU isolation assembly (1) bottom plate using 7/16" socket with ratchet and 3" extension.

e. Remove PU isolation assembly (1) from rack.

AH–6.7.2 REPLACE PU ISOLATION ASSEMBLY

a. Align four PU isolation assembly (1) bottom plate holes with installation holds in mounting rack.

NOTE

To ensure positive ground, PU ground strap must make direct contact with bare metal. Ensure PU ground strap is installed in its original location at the PU isolation assembly bottom plate mounting hole. Slip the lock washer, flat washer and then the ground strap on the mounting screw before installing and tightening screw.

b. Install one hex head screw (2), lock washer (3), flat washer (4) and ground strap on PU isolation assembly (1) bottom plate using 7/16” socket with ratchet and 3” extension.

c. Install remaining three hex head screws (2), lock washers (3) and flat washers (4) using 7/16” socket with ratchet and 3” extension.

d. Install PU IAW Unit Maintenance Manual TM 11-7010-326-20&P.

e. Perform Functional Check IAW paragraph AH–6.1.

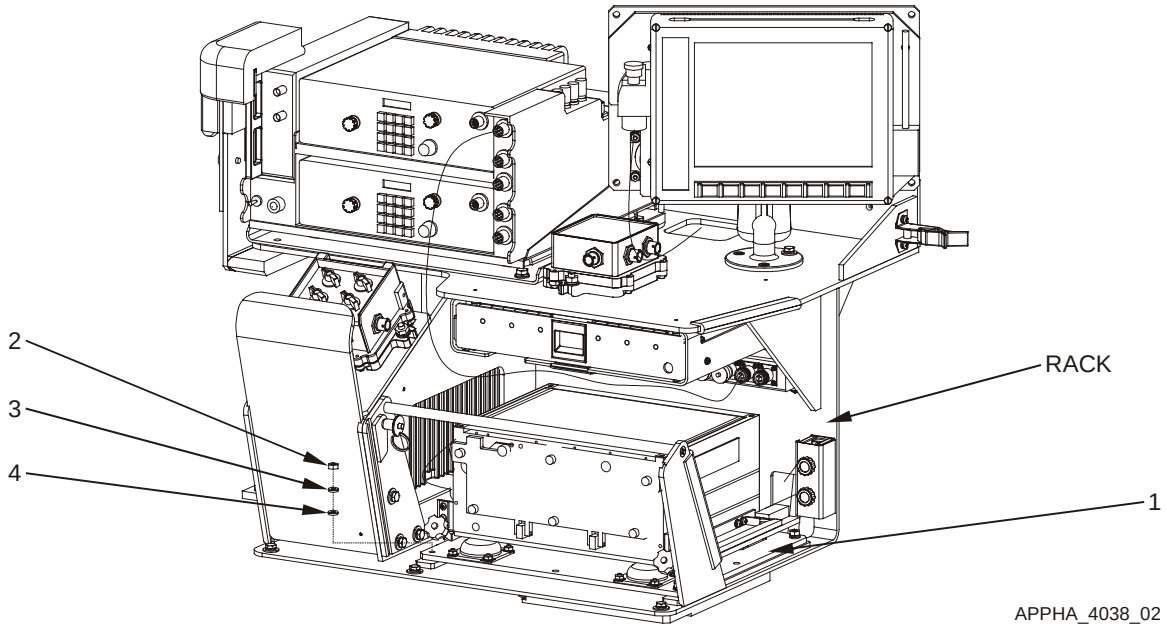

Figure AH-5. Remove and Replace PU Isolation Assembly

Key and Parts List for Figure AH-5.

ITEM NO.	NOMENCLATURE	CAGE CODE	PART NUMBER	NSN	QTY	SMR
1	(PU isolation assembly) Plate, Resilient Mount PU	0J198	872826-2	5340-01-481-5742	1	PAODD
2	Screw, Cap, Hexagon	80204	B1821AH025C100N	5305-01-389-7984	4	PAOZZ
3	Washer, Lock	96906	MS35338-44	5310-00-582-5965	4	PAOZZ
4	Washer, Flat	96906	MS27183-10	5310-00-809-4058	4	PAOZZ
--	Assembly, PU Lock	0J198	861865-1	5340-01-G72-7627	1	XBOOO
--	Bracket, Locking	0J198	861871-1	5340-01-G72-7628	1	PAOZZ
--	Screw	80205	MS35190-253	5305-00-05-4568	2	PAOZZ
--	Guard, Fastener	0J198	881328-1	9530-01-G72-7796	1	PAOZZ
--	Thermal Guard Assy (if installed)	0J198	872860-1	5999-01-G72-7670	1	XBOOO
--	Thermal Guard	0J198	872860-11	5999-01-G72-7671	1	PAOZZ
--	Screw, Machine	96906	MS51958-63	5305-00-059-3659	4	PAOZZ
--	Grommet	63590	BG2903	5325-01-291-3383	4	PAOZZ
--	Retainer, Bolt	032U6	75-4119	5325-01-G72-7672	4	PAOZZ

AH–6.8 REMOVE/REPLACE DU ISOLATION ASSEMBLY

Refer to Figure AH-6.

NOTE

Ground straps are attached to components at one end (PU and DU) and a frame ground at the other end. Regardless of where the ground strap terminates, it is usually a burnished (void of paint) area. If the ground strap is removed from a burnished area, make sure to return it to the same burnished area. Where applicable, always connect the ground strap first when assembling, and disconnect the ground strap last when disassembling.

AH–6.8.1 REMOVE DU ISOLATION ASSEMBLY

WARNING

Before conducting maintenance involving the removal and replacement of system components, ensure that all power to the FBCB2 system is off (including power from the vehicle). Failure to comply with warning may result in equipment damage or injury to personnel.

a. Power down AN/UYK-128(V) system IAW, Operator's Manual TM 11-7010-326-10, or Pocket Guide TB 11-7010-326-10.

b. Remove DU IAW Unit Maintenance Manual TM 11-7010-326-20&P.

NOTE

Note cable routing and tie-wrap locations before removing cable or tie-wraps.

c. Remove tie-wraps securing W2 display cable and ground strap to DU isolation assembly using diagonal wire cutters.

d. Loosen RAM-Ball knob while supporting DU isolation assembly (1) until RAM-Ball display base with ball can be lifted free of RAM-Ball socket arm.

e. Remove one self-locking wing nut (4), spacer (3), square neck bolt (2), and ground strap from RAM-Ball display base with ball and DU isolation assembly (1) bottom plate.

f. Remove remaining three self-locking wing nuts (4), spacers (3) and square neck bolts (2) from RAM-Ball display base with ball and DU isolation assembly (1) bottom plate.

g. Remove DU isolation assembly (1) from RAM-Ball display base with ball.

AH–6.8.2 REPLACE DU ISOLATION ASSEMBLY

a. Obtain replacement DU Isolation Assembly.

b. Align four RAM-Ball display base with ball installation holes with slots in the DU isolation assembly (1) bottom plate.

NOTE

To ensure positive ground, DU ground strap must make direct contact with bare metal. Ensure DU ground strap is installed in its original location at the DU isolation assembly bottom plate mounting hole. Slide a lock washer, flat washer and ground strap onto mounting screw before installing through the installation hole.

c. Install one self-locking wing nut (4), spacer (3), square neck bolt (2), and ground strap from RAM-Ball display base with ball and DU isolation assembly (1) bottom plate.

d. Install the remaining three square neck bolts (2), spacers (3) and self-locking wing nuts (4) on RAM-Ball display base with ball and DU isolation assembly (1) bottom plate.

CAUTION

Ensure RAM-Ball is free of dirt and contaminants before reassembling. Failure to comply can result in slippage or excess wear of RAM-Ball assembly.

e. Inspect and clean RAM-Ball socket arm and display base with ball, as necessary, using clean lint-free wipes.

f. Insert RAM-Ball display base with ball into RAM-Ball socket arm.

g. Adjust viewing angle and tighten RAM-Ball knob.

h. Secure W2 display cable and ground strap to DU isolation assembly (1) bottom plate using tie-wraps.

i. Dress tie-wrap using diagonal wire cutters.

j. Install DU IAW Unit Maintenance Manual TM 11-7010-326-20&P.

k. Perform Functional Check IAW paragraph AH–6.1.

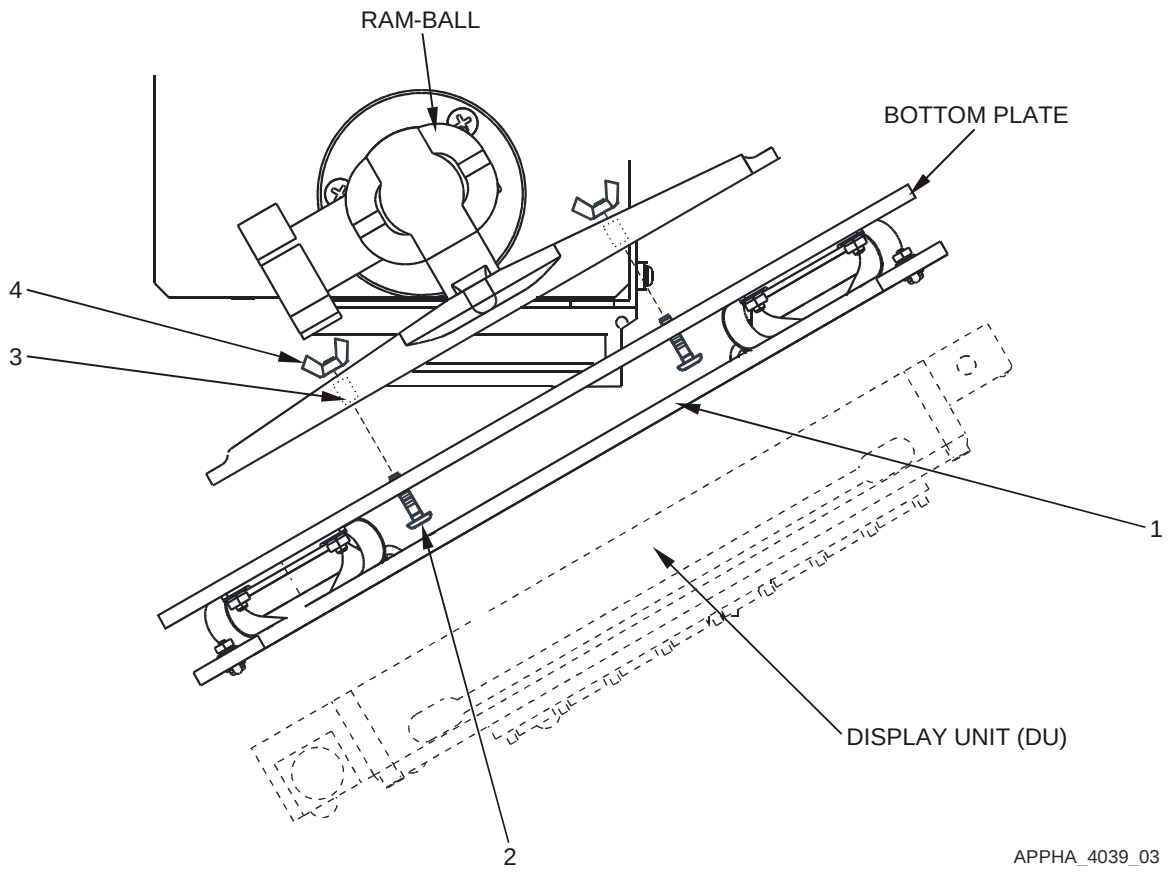

Figure AH-6. Remove and Replace DU Isolation Assembly

Key and Parts List for Figure AH-6.

ITEM NO.	NOMENCLATURE	CAGE CODE	PART NUMBER	NSN	QTY	SMR
1	(DU isolation assembly) Plate, Resilient Mount DU	0J198	872870-1	5340-01-481-5757	1	PAODD
2	Bolt, Square Neck	96906	MS35751-17	5306-00-889-2943	4	PAOZZ
3	Spacer, Aluminum	57177	10705AL315C	5365-01-G72-7642	4	PAOZZ
4	Nut, Self-Locking, Wing	96906	MS51553-420	5310-01-384-2546	4	PAOZZ
--	Strap, Tie Down, Elect	39428	7130K31	5975-01-G72-7634	6	XBOZZ
--	Assembly, DU Lock	0J198	872843-1	5340-01-G72-7629	1	XBOOO
--	Bracket, Locking	0J198	861871-3	5340-01-G72-7630	1	PAOZZ
--	Washer, Lock	96906	MS35338-42	5310-00-045-3299	2	PAOZZ
--	Screw	80205	MS35190-253	5305-00-059-4568	2	PAOZZ

AH–6.9 REMOVE/REPLACE KEYBOARD UNIT (KU) STOWAGE BOX

Refer to Figure AH-7.

AH–6.9.1 REMOVE KEYBOARD UNIT (KU) STOWAGE BOX

a. Remove keyboard from stowage box, if stowed.

b. Loosen four KU stowage box captive screws (1) until captive screws move freely using a No. 2 cross-tip screwdriver.

c. Remove KU stowage box (3) from mounting bracket.

AH–6.9.2 REPLACE KEYBOARD UNIT (KU) STOWAGE BOX

a. Align four KU stowage box (3) captive screws (1) with mounting bracket installation holes.

b. Tighten four captive screws using a No. 2 cross-tip screwdriver.

c. Stow keyboard, if necessary.

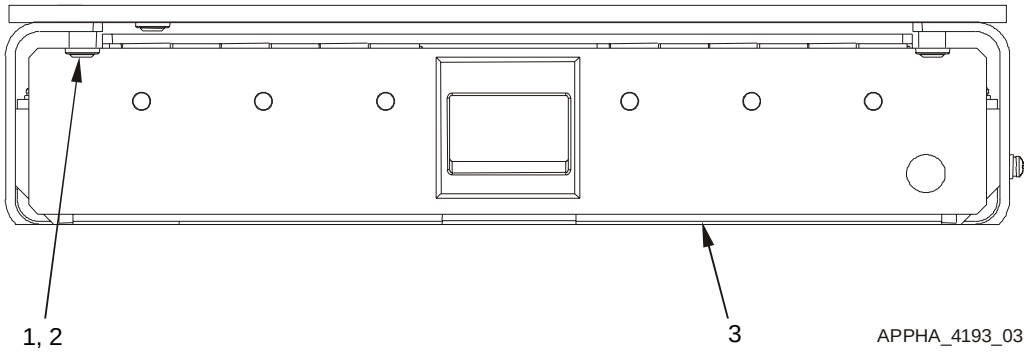

Figure AH-7. Remove and Replace Keyboard Unit (KU) Stowage Box

Key and Parts List for Figure AH-7.

ITEM NO.	NOMENCLATURE	CAGE CODE	PART NUMBER	NSN	QTY	SMR
1	Screw, Captive Panel	57177	PH207-05SS1032		4	PAOZZ
2	Retainer, Panel Screw	57177	214-03SS10-32		4	PAOZZ
3	Box, Stowage, Keyboard	0J198	889519-1	2540-01-481-5744	1	PAODD
	Case, Keyboard	0J198	872845-11		1	XBOOO
	Bottom, Stowage Box	0J198	872845-12		1	XBOOO
	Side rail, KB Box	0J198	872845-13		1	XBOOO
	Side rail, KB Box	0J198	872845-14		1	XBOOO
	Door, Keyboard Box	0J198	872845-15		1	XBOOO
	Hinge, Keyboard Box	0J198	872845-16		1	XBOOO
	Strip, Rubber	0J198	872845-17		1	XBOOO
	Rivet, Solid, CSK	96906	MS20426AD4-5	5320-00-117-6950	6	PAOZZ
	Label, KB Box	0J198	881323-1		1	PAOZZ
	Nut, Plain Hexagon	96906	MS35649-2252	5310-00-934-9747	3	PAOZZ

AH–6.10 REMOVE/REPLACE RAM-BALL ASSEMBLY

Refer to Figure AH-8.

NOTE

Ground straps are attached to components at one end (PU and DU) and a frame ground at the other end. Regardless of where the ground strap terminates, it is usually a burnished (void of paint) area. If the ground strap is removed from a burnished area, make sure to return it to the same burnished area. Where applicable, always connect the ground strap first when assembling, and disconnect the ground strap last when disassembling.

AH–6.10.1 REMOVE RAM-BALL ASSEMBLY

WARNING

Before conducting maintenance involving the removal and replacement of system components, ensure that all power to the FBCB2 system is off (including power from the vehicle). Failure to comply with warning may result in equipment damage or injury to personnel.

a. Power down AN/UYK-128(V) system IAW Operator's Manual TM 11-7010-326-10, or Pocket Guide TB 11-7010-326-10.

b. Remove DU IAW Unit Maintenance Manual TM 11-7010-326-20&P.

NOTE

Note cable routing and tie-wrap locations before removing cable or tie-wraps.

c. Remove tie-wraps securing W2 display cable and ground strap to DU isolation assembly using diagonal wire cutters.

d. Loosen RAM-Ball knob while supporting DU isolation assembly until RAM-Ball display base with ball can be lifted free of RAM-Ball socket arm.

e. Remove one self-locking wing nut (8), ground strap, spacer (7) and square neck bolt (6) from Ram-Ball display base with ball and DU isolation assembly bottom plate.

f. Remove remaining three self-locking wing nuts (8), spacers (7) and square neck bolts (6) from Ram-Ball display base with ball and DU isolation assembly bottom plate.

g. Remove RAM-Ball socket arm from RAM-Ball mounting base with ball on display support bracket.

h. Remove three hex nuts (4), lock washers (3), flat washers (2) and machine bolts (5) from RAM-Ball mounting base with ball and display support bracket using a 7/16" open end wrench and No. 3 cross-tip screwdriver.

AH–6.10.2 REPLACE RAM-BALL ASSEMBLY

a. Obtain the replacement RAM-Ball Assembly.

b. Align three holes in RAM-Ball mounting base with ball with display support bracket installation holes.

c. Install three machine bolts (5), flat washers (2), lock washers (3) and hex nuts using a 7/16” open end wrench and No. 3 cross-tip screwdriver.

CAUTION

Ensure RAM-Ball is free of dirt and contaminants before reassembling. Failure to comply can result in slippage or excess wear of RAM-Ball assembly.

d. Inspect and clean RAM-Ball socket are, display and mounting base with ball, as necessary, using clean lint-free wipes.

e. Install RAM-Ball socket arm on RAM-Ball mounting base with ball.

f. Align four holes in RAM-Ball display base with ball with slots in DU isolation assembly bottom plate.

g. Install three square neck bolts (6), spacers (7) and self-locking wing nuts (8) on Ram-Ball display base with ball and DU isolation assembly bottom plate.

NOTE

To ensure positive ground, DU ground strap must make direct contact with bare metal. Ensure DU ground strap is installed in its original location at the DU isolation assembly bottom plate mounting hole. Slide a lock washer, flat washer and ground strap onto mounting screw before installing through the installation hole.

h. Install one remaining square neck bolt (6), ground strap, spacer (7) and self-locking wing nut (8) on Ram-Ball display base with ball and DU isolation assembly bottom plate.

i. Insert RAM-Ball display base with ball into RAM-Ball socket arm.

j. Adjust viewing angle and tighten RAM-Ball knob.

k. Secure W2 display cable and ground strap to DU isolation assembly using tie-wraps.

l. Dress tie-wraps using diagonal wire cutters.

m. Install DU IAW Unit Maintenance Manual TM 11-7010-326-20&P.

n. Perform Functional Check IAW paragraph AH–6.1.

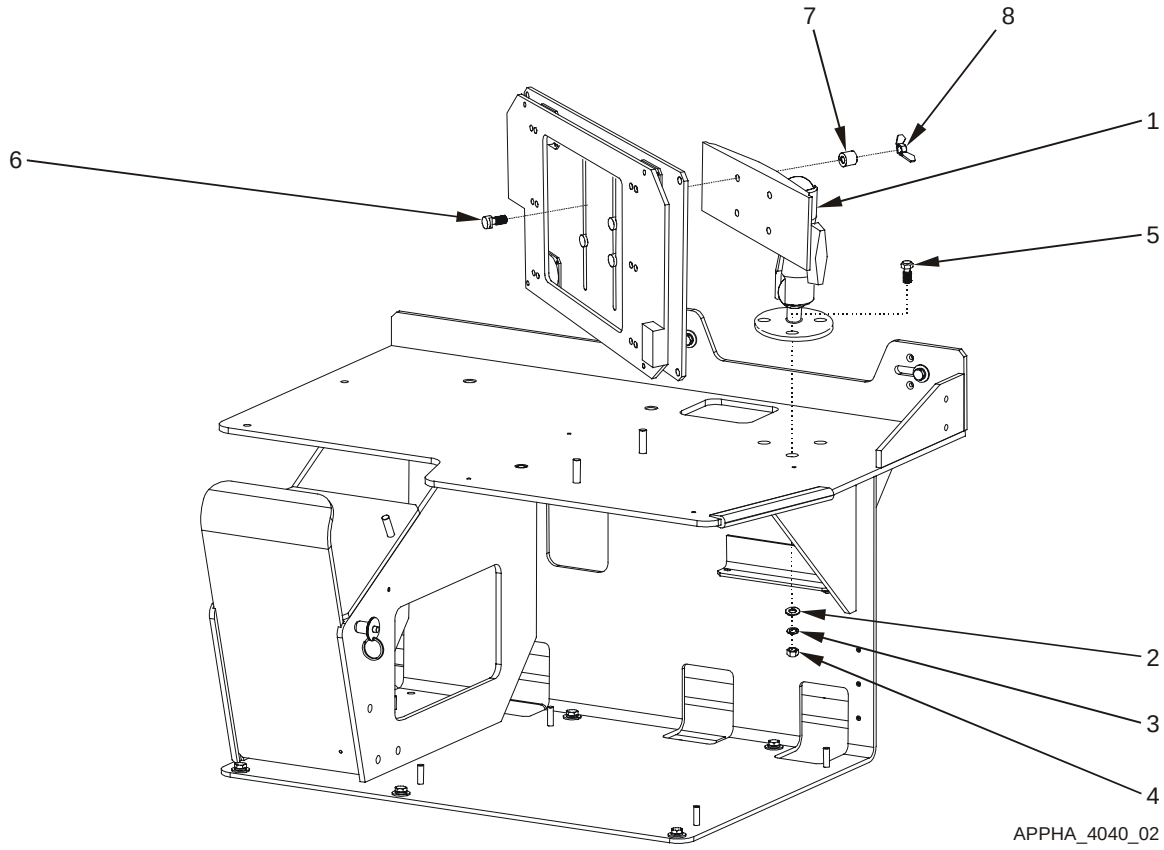

Figure AH-8. Remove and Replace RAM-Ball Assembly

Key and Parts List for Figure AH-8.

ITEM NO.	NOMENCLATURE	CAGE CODE	PART NUMBER	NSN	QTY	SMR
1	(RAM-Ball assembly) Mount , RAM-Ball	0J198	889489-1	5975-01-G72-7641	1	PAOZZ
2	Washer, Flat	96906	MS27183-10	5310-00-809-4058	3	PAOZZ
3	Washer, Lock	96906	MS35338-44	5310-00-582-5965	3	PAOZZ
4	Nut, Plain, Hexagon	96906	MS35649-2252	5310-00-997-1888	3	PAOZZ
5	Bolt, Machine	96906	MS35190-291	5306-00-042-6921	3	PAOZZ
6	Bolt, Square Neck	96906	MS35751-17	5306-00-889-2943	4	PAOZZ
7	Spacer, Aluminum	57177	10705AL315C	5365-01-G72-7642	4	PAOZZ
8	Nut, Self-Locking, Wing	96906	MS51553-420	5310-01-384-2546	4	PAOZZ
--	Strap, Tie Down, Elect	39428	7130K31	5975-01-G72-7634	6	PAOZZ