CHAPTER 3

MACHINE SEWING ON CLOTHING AND TEXTILES

3-1. MACHINE SEWING

Machine sewing is stitching done on electrically powered equipment. Sewing machines form a stitch by interlocking a top thread and a bottom thread. The stitches made by sewing machines are more durable and more uniform in size, and they look more tailored than stitches made by hand. Machine sewing is faster than hand sewing. For these reasons, machine sewing is used instead of hand sewing when possible.

3-2. SEWING MACHINES

The military uses several kinds of sewing machines. They include light-, medium-, and heavy-duty sewing machines, darning machines, and button-sewing machines (Figure 3-1). The kind of machine to use is determined by the weight of the fabric and the type of repair needed. Instructions for operating and maintaining sewing machines can be found in the appropriate technical manuals. Some information on needles, thread, stitch length, pressure, and tension is included here because they affect the appearance of the seam.

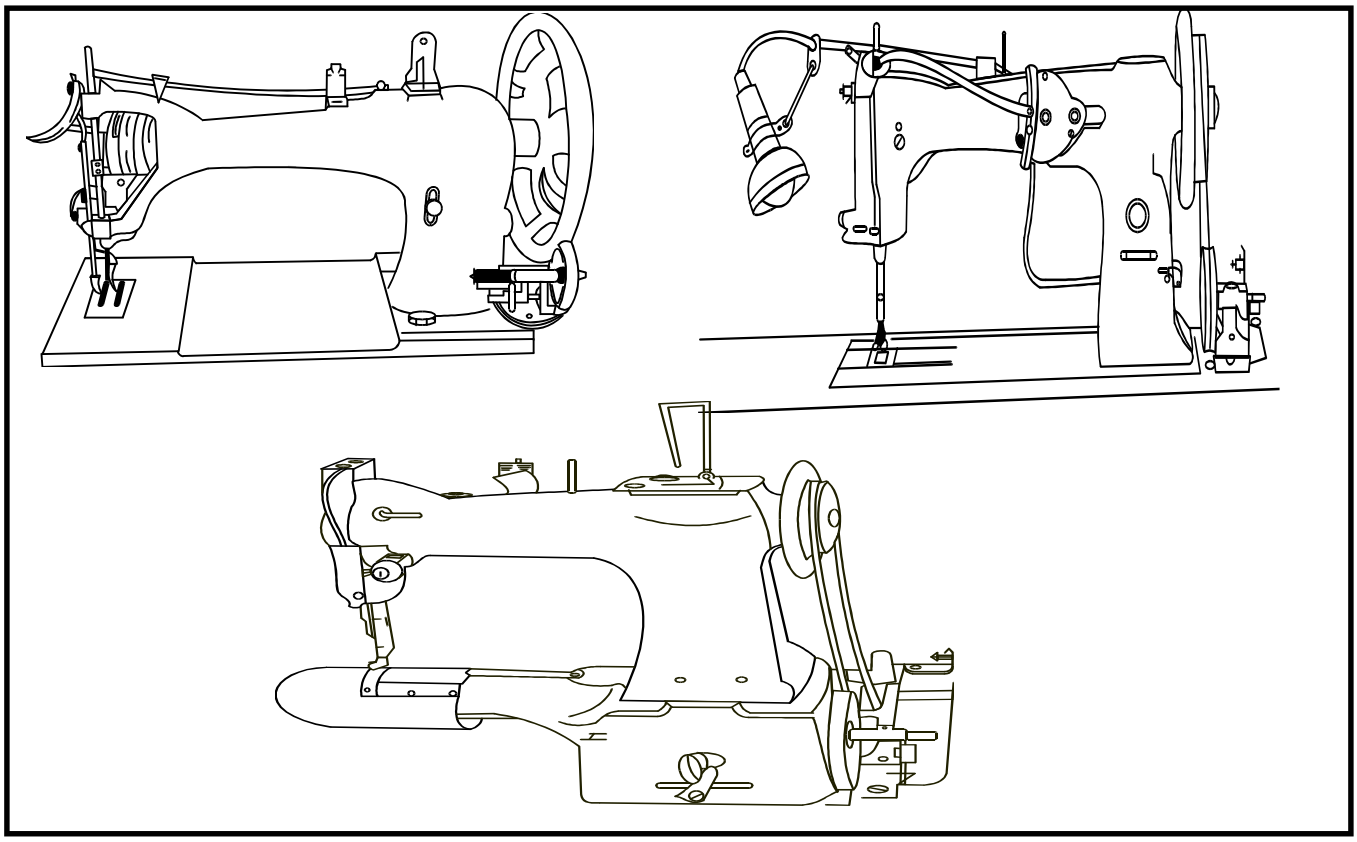

Figure 3-1. Typical sewing machines

a. Needles. Sewing machine needles (Figure 3-2) come in several types and sizes. The needles are classified by the type of shank, the type of point, and the length of the needle. Each type of sewing machine uses a different type of needle. Always use the correct type of needle, and replace bent or dull needles so that the machine operates properly. Needles come in numbered sizes. Needles with high numbers have bigger eyes and thicker shanks than needles with low numbers. The size needle to use is determined by the size thread needed to make the repair. Always match the size of the needle to the size of the thread so that the thread will pass easily through the eye.

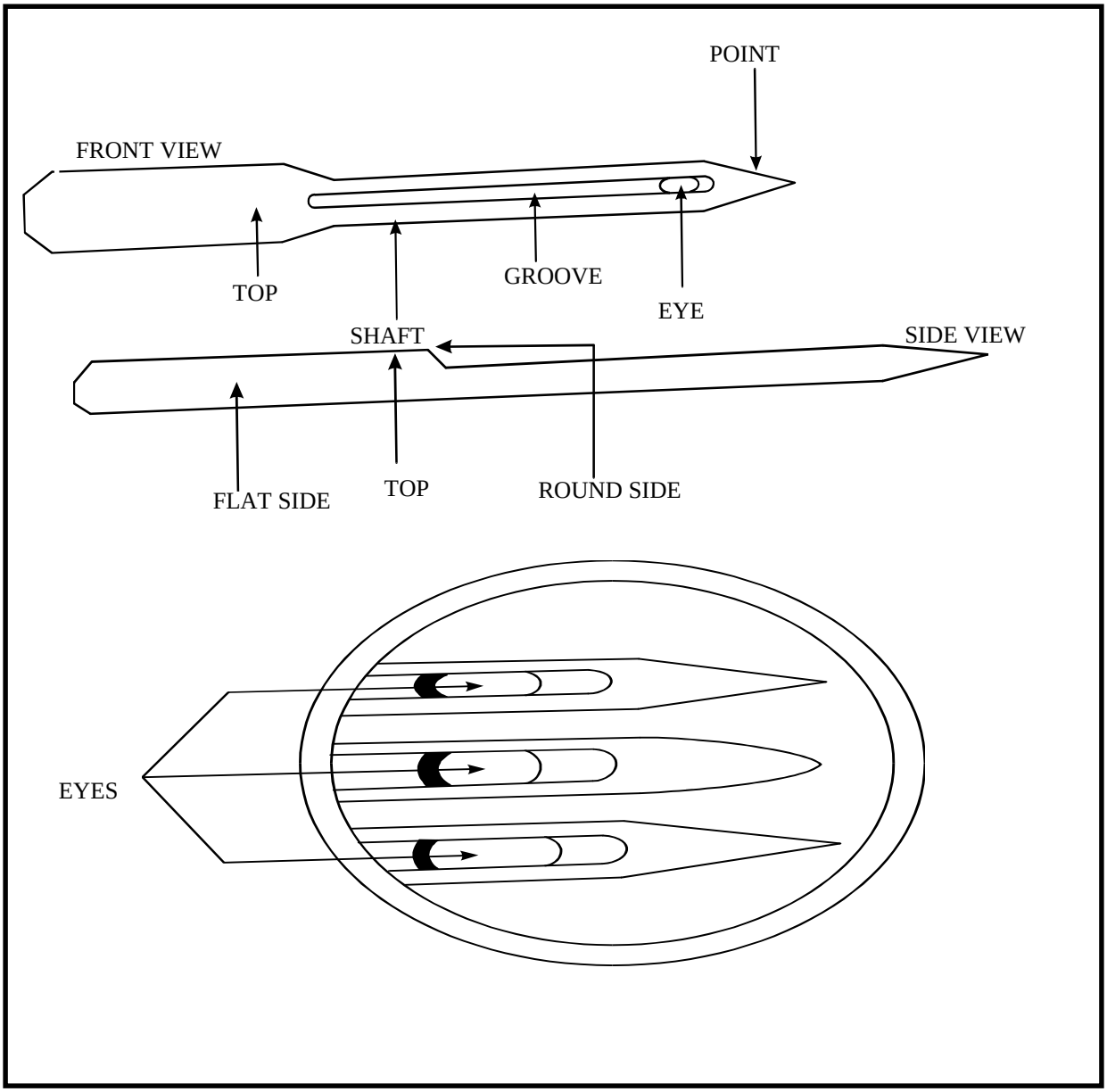

Figure 3-2. Sewing machine needles

b. Thread. Thread comes in several plies, weights, and colors. It is made of various materials, such as cotton, silk, or polyester. Thread also comes in two different twists. The twist is determined by the direction in which the fibers are spun together or the direction in which the plies are twisted together

(Figure 3-3). Always use left-twist thread for the top thread, which is fed through the needle. Use left- or right-twist thread for the bottom thread, which is fed from the bobbin. Follow the directions in the appropriate technical manual to thread the needle and to wind the bobbin in each sewing machine.

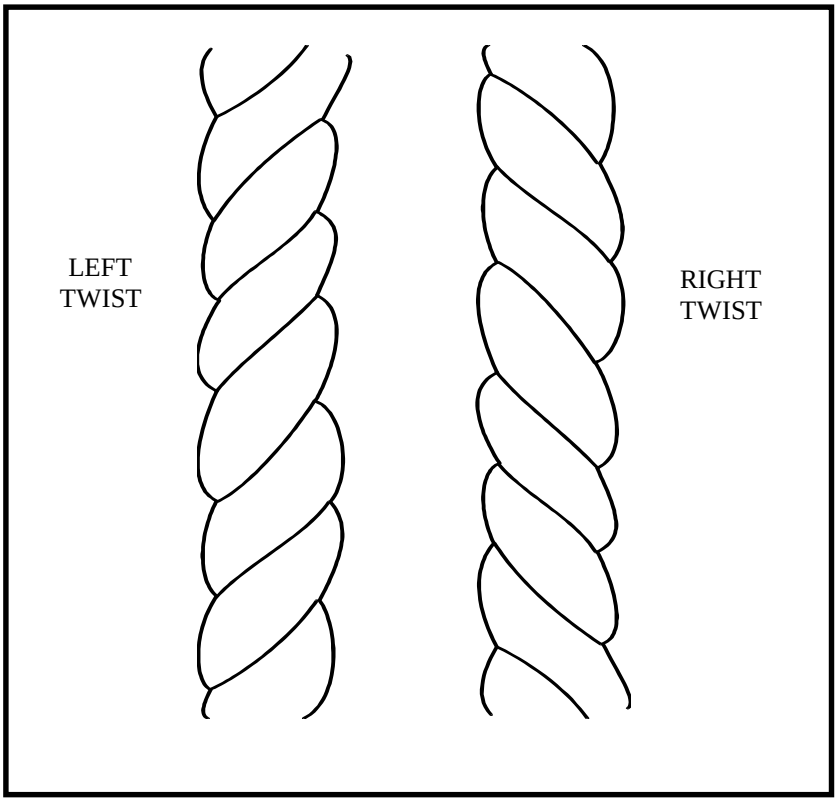

Figure 3-3. Thread twists

c. Stitch Length. The sewing machines used by the military make only one kind of stitch, a lockstitch (Figure 3-4). This stitch is formed when a top thread and a bottom thread interlock. The length of the stitch is determined by the forward movement of the cloth. The cloth is moved by feed dogs. The more fabric the feed dogs move forward with each stitch, the longer the stitches are. Stitch length is measured by the number of stitches per inch (Figure 3-5). Generally, short stitches are used on light fabrics. Long stitches are used on heavy fabric. Long stitches are also used for machine basting. Use the same stitch length to repair an item as that used to make it. Follow directions in the appropriate technical manual to change the stitch length on each sewing machine.

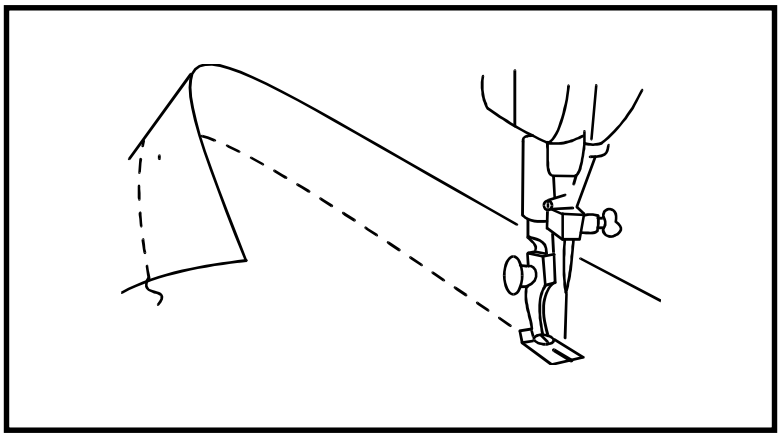

Figure 3-4. Lockstitch

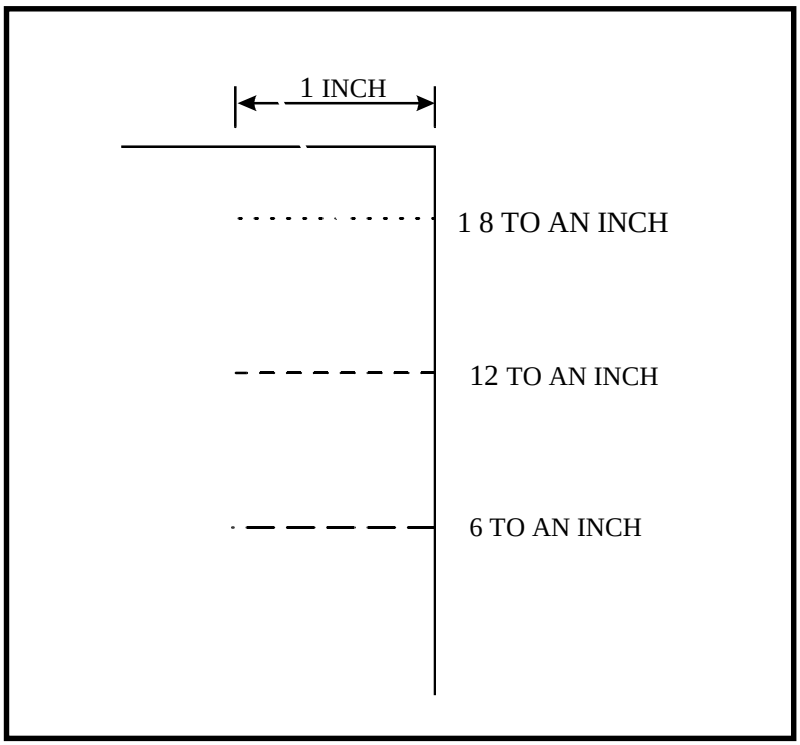

Figure 3-5. Stitch length

d. Pressure. Pressure is the amount of force exerted downward on cloth by the presser foot. The presser foot holds the fabric in place while a stitch is being sewn. The pressure and feed dogs then work together to move the fabric forward to the next stitch. If the pressure is too light, the feed dogs move the fabric forward unevenly. The amount of pressure needed depends on the weight of the cloth. As a rule, the lighter the fabric the less pressure needed to move it. Before sewing on fabric whose weight differs from that of the fabric last sewn on the machine, test the pressure by sewing a seam on scrap material. Use the same type of fabric and the same number of layers that will be used in the repair. If one layer of fabric slips, if stitches are skipped, or it the fabric is pulled down in the bobbin area, adjust the pressure. Follow directions in the appropriate technical manual to adjust the pressure on each sewing machine.

e. Tension. Tension is the amount of stress put on a thread. When the tension between the top thread and the bottom thread is correct and balanced, the connecting link of each lockstitch is in the center (Figure 3-6). The stitches look the same on both sides. When there is too much tension on the top thread or too little on the bottom thread, the link is on the bottom. When there is too much tension on both threads, the fabric puckers and the stitches break. When there is too little tension on both threads, the stitches have too much play, the threads form loops, and the seam is weak.

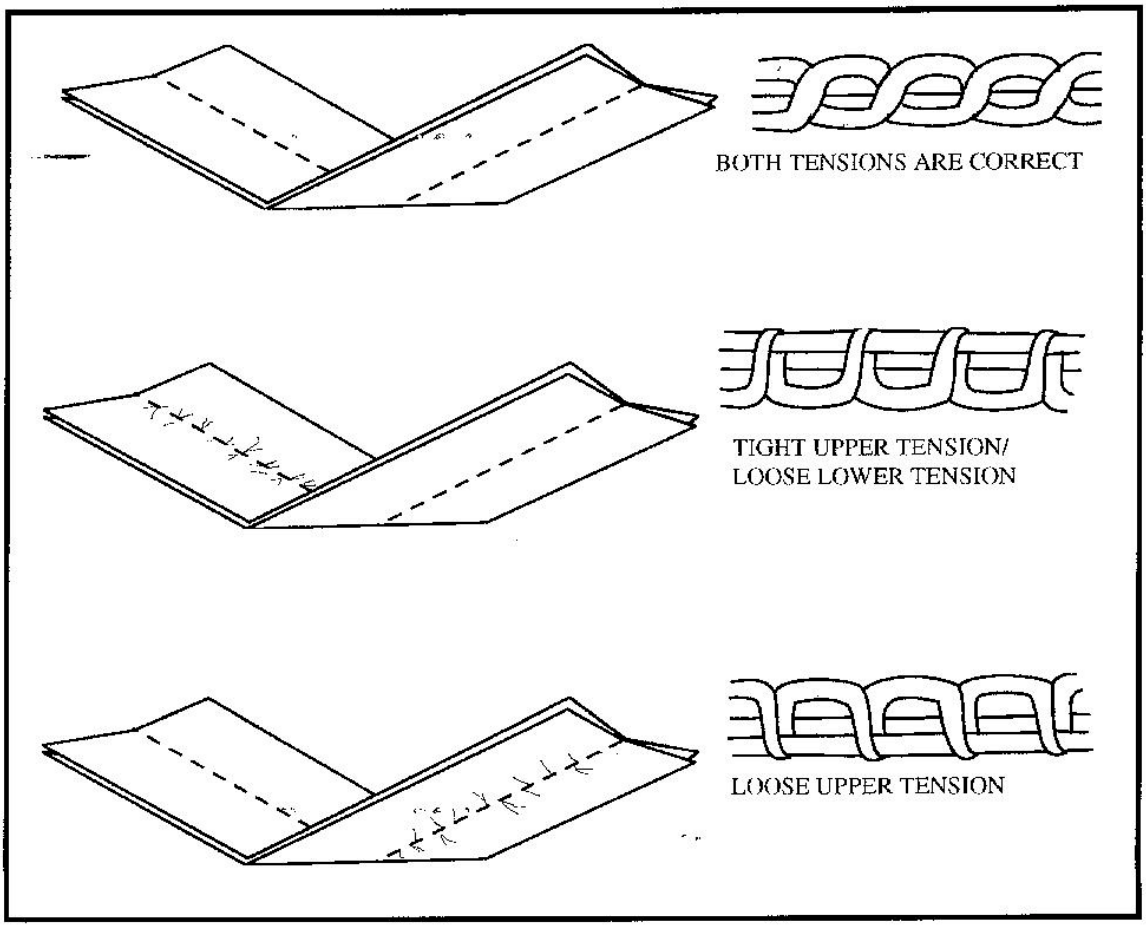

Figure 3-6. Thread tension

To test thread tension, stitch diagonally across a piece of scrap material. Look at the stitches closely. If the stitches do not look the same on both sides of the cloth, hold the stitching at each end and pull until a thread breaks. If the top thread breaks, there is too much tension on the top thread. If the bottom thread breaks, there is too much tension on the bottom thread. Follow the directions in the appropriate technical manual to adjust the thread tension on each sewing machine--

3-3. TACKING

Tacking (Figure 3-7) is used to secure the beginning and end of every seam. It keeps the cut ends of the thread from unraveling and the entire seam from pulling out. Tacking is sometimes called backstitching. Do not confuse it with the hand-sewn backstitch. There are two ways to tack seams with a sewing machine. The one used depends on whether or not the machine has the mechanism that allows it to sew in reverse.

a. Machine Without a Reverse. Many older sewing machines do not have a reverse. To tack a seam using this type of machine--

(1) Place the cloth under the needle so that the bulk of the fabric is to the right of the needle and the seam allowance is to the left. Move the cloth until about 1 inch of the cloth lies in front of the needle. Adjust the cloth so that the needle will stitch the tacking on the same line that it will later stitch the seam.

(2) Lower the presser foot. To tack the beginning of the seam, sew a row of stitches about 1 inch long toward the cut edge of the cloth. Do not run off the cut edge of the cloth, but stop with the needle down in the fabric.

(3) Raise the presser foot. Pivot the cloth so that the seam can be sewn over the tacking stitches. The bulk of the fabric should now be to the left of the needle. The seam allowance should be to the right.

(4) Lower the presser foot. Stitch back over the tacking. Continue to sew to the end of the seam or the cut edge of the cloth. Do not run off the edge, but stop sewing with the needle down in the cloth.

(5) Raise the presser foot. Pivot the material on the needle.

(6) Lower the presser foot. Stitch back 1 inch over the seam stitches to tack the end of the seam.

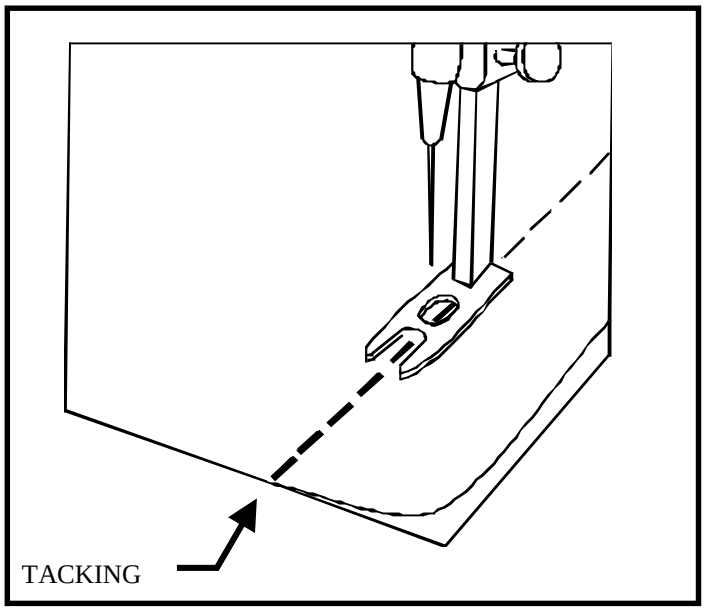

Figure 3-7. Tacking

b. Machine With a Reverse. The reverse mechanism is put into action by pushing a button or lever while the machine is working. Pushing the lever or button reverses the motion of the feed dogs. Material is fed back toward the operator instead of forward and away from the operator. Releasing the button or lever stops the reverse motion. To tack a seam using this type of machine--

(1) Place the cloth under the needle about 1 inch from the beginning of the seam line. Adjust the cloth so that the needle will stitch the tacking on the seam line. The bulk of the fabric should be to the left of the needle. The seam allowance will be to the right.

(2) Activate the reverse mechanism, and sew back almost to the cut edge of the cloth. This tacks the seam at the beginning.

(3) Release the lever or button to stop the reverse mechanism, and sew forward almost to the end of the seam line.

(4) Activate the reverse mechanism again, and sew back about 1 inch. This tacks the seam at the end.

3-4. CHARACTERISTICS OF GOOD SEAMS

A seam is a row of stitches joining two or more pieces of material. Good seams have the following characteristics.

a. Seams are as strong as the material they join. Some seams are stronger than others because of the way they are constructed. Other factors affecting the strength of seams are the type and length of the thread.

b. Seams have just as much elasticity as the material they join. They do not break when the garment is put under stress. The elasticity of seams is determined by the thread and the type of stitch used to make the seams.

c. Seams are durable and uniform in appearance. They do not have loose, crowded, tight, crooked, or skipped stitches. They do not have puckers or pleats.

d. Seams are not wavy. Stitches are a uniform distance from the edge of the fabric. Raised seams do not have runoffs, and felled seams do not have exposed raw edges.

3-5. TYPES OF SEAMS

The military uses seven basic types of seams on clothing and textile items. At least two types of seams are used to make each piece of military clothing. The types of seams used depend on the garment, the location of the seams, and whether or not the seams are exposed.

a. Plain or Simple. The plain or simple seam (Figure 3-8) is the easiest seam to sew. It uses one row of stitches to join two pieces of cloth. This seam is used when a finished seam edge is not required, such as open side seams that must be mended. It is also used to mend straight and L-shaped tears when little or no material is missing. To make a simple seam--

(1) Place the material together face to face (all four edges square).

(2) Mark the edge of the material 1/2 inch from the raw edge on the 8-inch length.

(3) Place the material on the machine so that the mark is in a vertical position.

(4) Start at the top of the marking on the edge of the material and stitch down to the bottom edge of the material. Allow a 1 inch tack stitch at both ends of the material not less than 7/8 inch or more than 1 1/8 inches.

(5) Press the seams open with an iron.

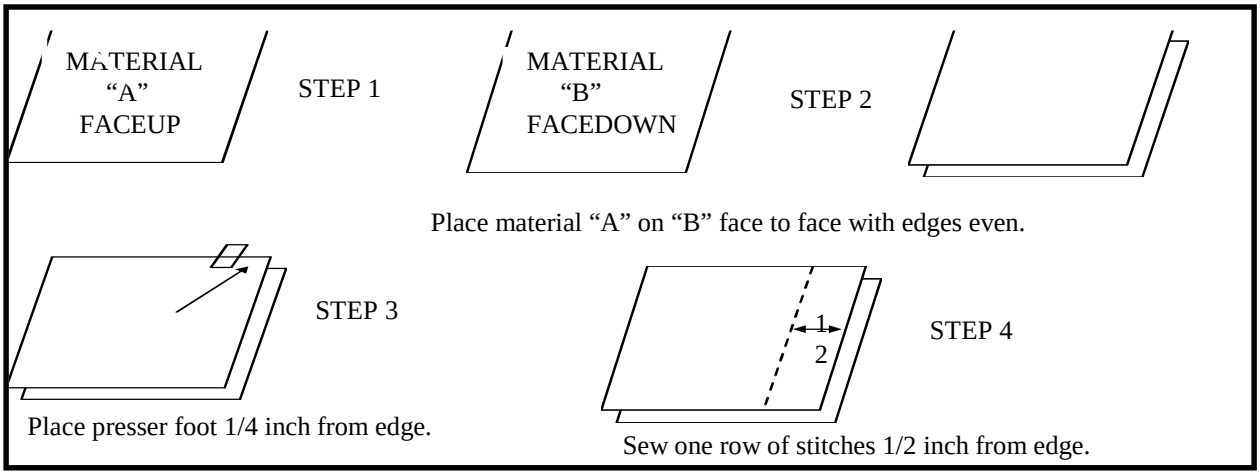

Figure 3-8. Simple seam

b. Seam Type 1. Seam type 1 (Figure 3-9) is a hemming seam. It is used to put a machine-sewn hem in garments such as shirts and trousers. This seam is used when the garment does not need a deep or hidden hem. It is also used to put a simple finished seam edge on sheets and pillowcases and many other textile items. To make seam type 1--

(1) Place a piece of material 8 inches by 8 inches on the table face up.

(2) Mark the face side of the material 1 1/2 inches from the edge (on the 8-inch edge), a straight line across the length of material.

(3) Make the second line 1/2 inch from the edge across the length of the material.

(4) Fold the material on the first mark made 1 1/2 inches from the edge.

(5) Fold the material on the first mark made forming a hem. (The overall width of the hem when folded should be 1 inch at this time.)

(6) Place the material on the machine keeping the material folded.

(7) Starting on the end of the hem and on the 1/2-inch turn under, sew a row of stitches 1/16 inch from the folded edge, the length of the hem. Each end of the stitch line should be tacked.

(8) Press the material flat with an iron.

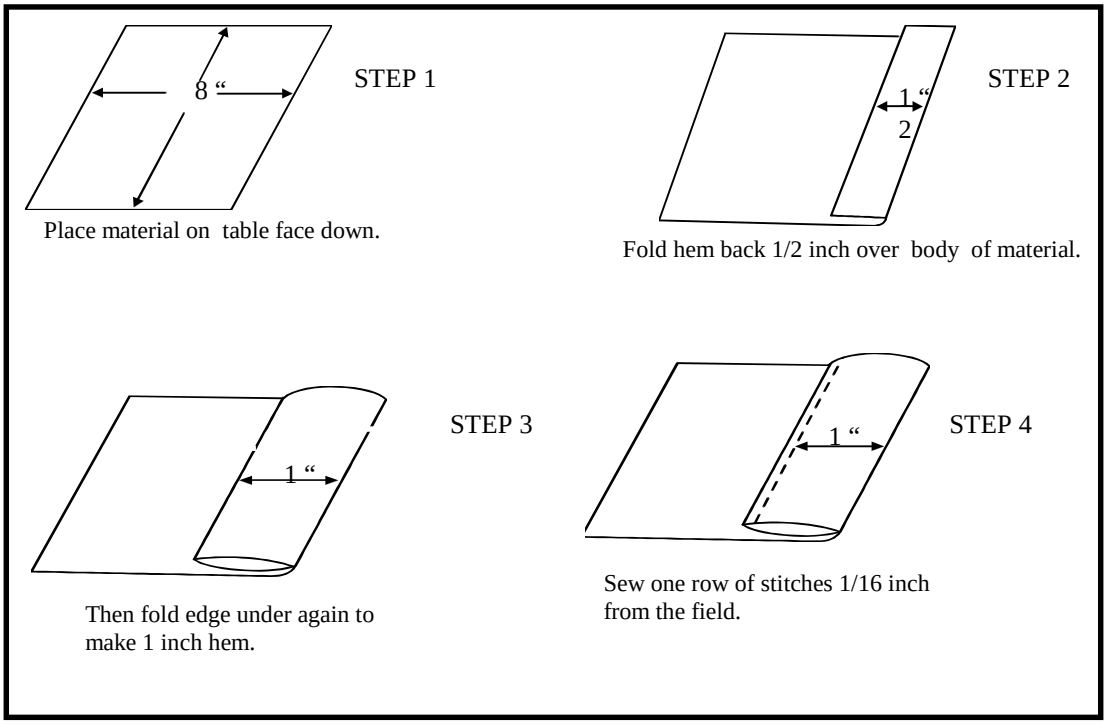

Figure 3-9. Seam type 1

c. Seam Type 2. Seam type 2 (Figure 3-10) is a lapped seam. It is used to sew a patch-type pocket on shirts, jackets, and coats. This seam is also used to sew plackets on shirt sleeves and to attach a zipper on the left side of a fly front. To make seam type 2--

(1) Cut an 8- by 8-inch piece of material into two pieces 4 inches by 8 inches.

(2) Place the two pieces of the material on a table face up.

(3) Mark both pieces of the material 1/2-inch from edge (on the 8 inches length) across length of material.

(4) Fold under edge of one piece of the material on the 1/2-inch mark and place it on the marking on the second piece of the material.

(5) Place the materials on the machine and stitch down the entire length of the material 1/4 inch from the folded edge.

(6) Tack the stitch lines at both ends with a 1-inch tack (no less than 7/8-inch or no more than 1 1/8 inches).

(7) Press the seam area with an iron.

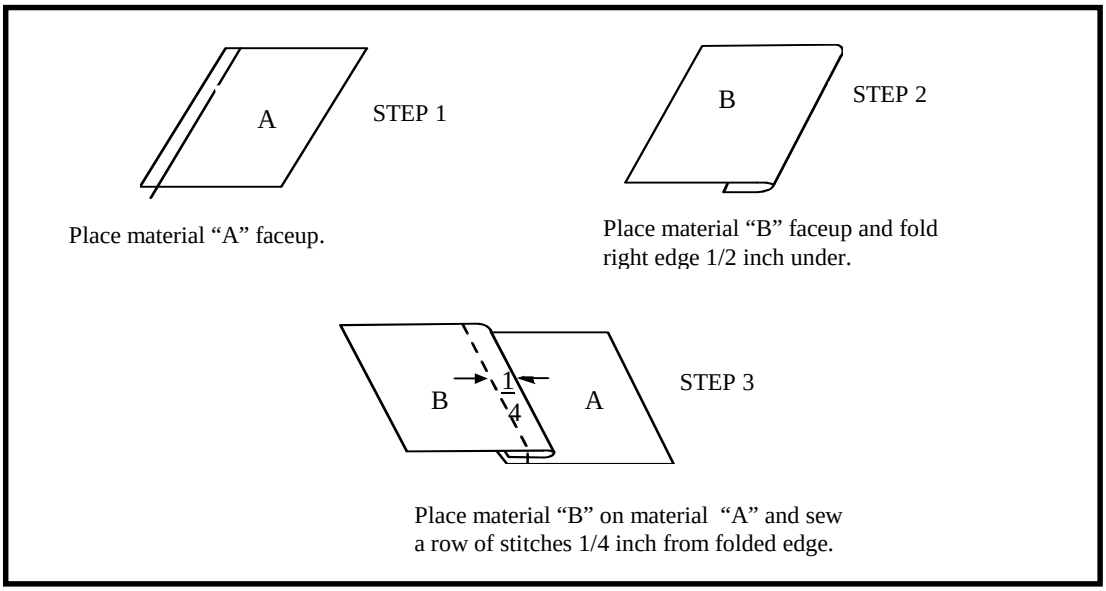

Figure 3-10. Seam type 2

d. Seam Type 3. Seam type 3 (Figure 3-11) is a welt seam. It is a strong seam used to sew pockets, sleeves, and main seams in heavy garments. This seam is also used to replace pocket flaps and to attach a zipper to the right side of a fly front. Seam type 3 is a combination of the simple seam and seam type 2. To make seam type 3--

(1) Cut an 8- by 8-inch piece of material into two pieces 4 inches by 8 inches.

(2) Place the two pieces of the material on the table face to face.

(3) Mark the top piece of material 1/2 inch from edge (on the 8-inch edge) across the length of material.

(4) Make certain both edges of the material (top and bottom pieces) are even at the marked edge.

(5) Sew the two pieces of material together with a simple seam, following the markings made 1/2-inch from the edge.

(6) Tack the stitch lines at both ends with a 1-inch tack (no less than 7/8-inch, or no more than 1 1/8 inches).

(7) Fold the top piece of the material to the right, and sew a row of stitches 1/4 inch to the right of the simple seam.

(8) Tack both ends of the seam with a 1-inch tack.

(9) Press the seam area flat with an iron.

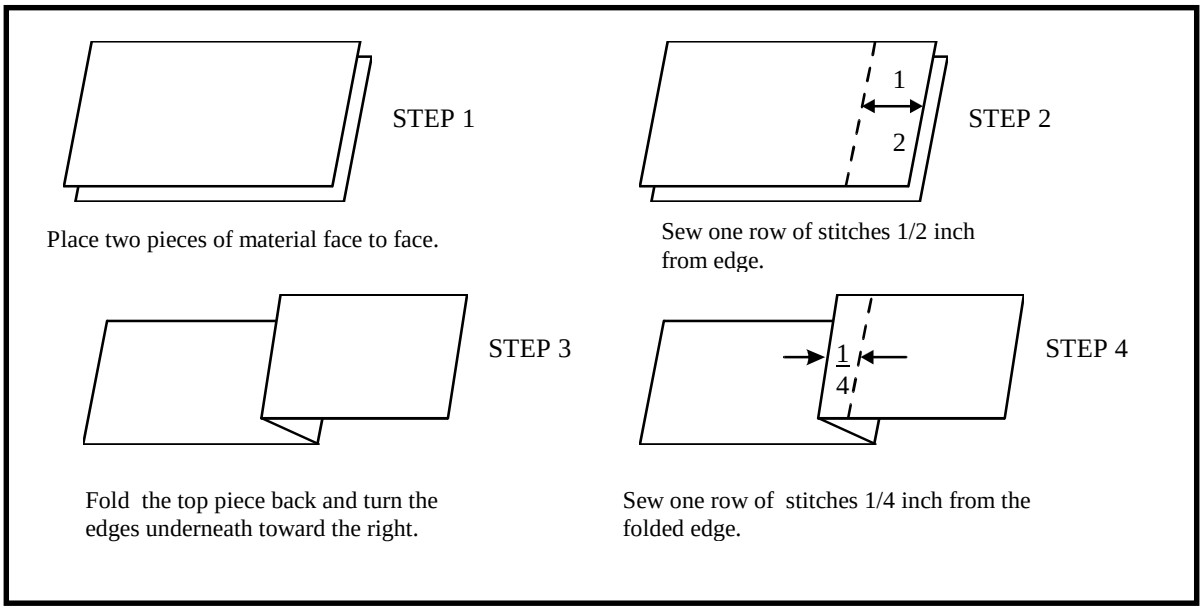

Figure 3-11. Seam type 3

e. Seam Type 4. Seam type 4 (Figure 3-12) is a double-lapped seam. It is an extremely strong seam, because no raw edges are left exposed to unravel and two rows of stitches are used. This seam is used in garments that get a great deal of stress and are washed often. It is used to join the fronts and backs of shirts and field uniforms. When the seam is sewn correctly, it looks the same on the inside and the outside of the garment. To make seam type 4--

(1) Cut an 8- by 8-inch piece of material into two pieces 4 inches by 8 inches.

(2) Place the two pieces of the material faceup and side by side.

(3) Mark the piece of the material on the left, 1/4 inch from the right edge (8- inch length).

(4) Mark the piece of the material on the right, 1/2 inch from the left edge (8-inch length).

(5) Fold the material on the left 1/4-inch mark and place it on the 1/2-inch mark of material on the right.

(6) Sew a row of stitches 1/16 inch from the folded edge of the top material. Make certain to tack both ends of the seam.

(7) Turn the joined materials over with the back side of the material up.

(8) Mark 1/4 inch from the raw edge of the joined seam.

(9) Fold under 1/4 inch at mark and stitch 1/16 inch from the folded edge across the length of the material.

(10) Tack at both ends of the seam with a 1-inch tack (no less than 7/8 inches, or no more than 1 1/8 inches).

(11) Make sure that the stitch lines are evenly spaced and straight. Make sure each seam line has a tack at each end and that no raw edges are showing.

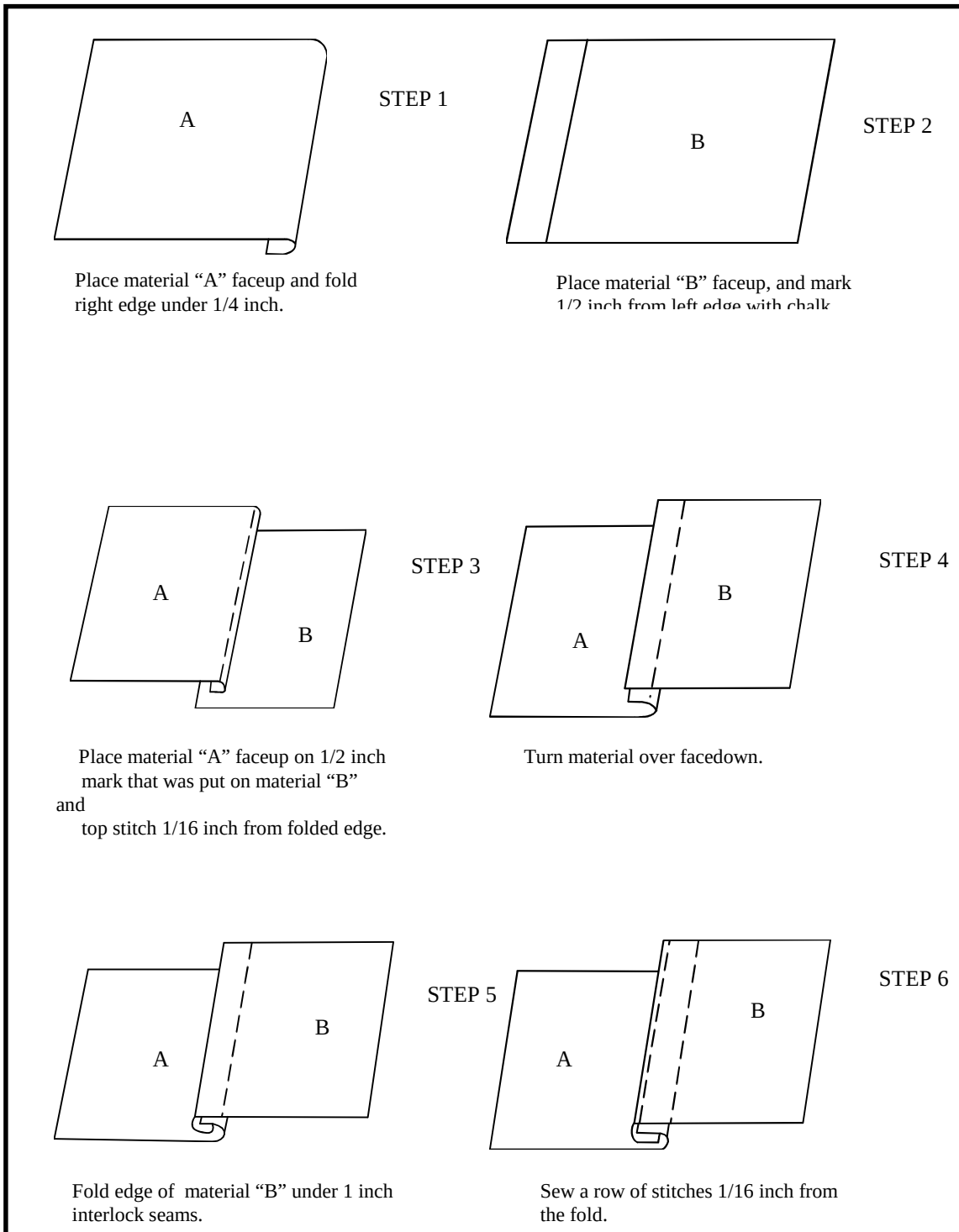

Figure 3-12. Seam type 4

f. Seam type 5. Seam type 5 (Figure 3-13) is an overlapped and topstitched seam. It is used to attach collars and cuffs to shirts. To make seam type 5--

(1) Cut an 8- by 8-inch piece of material into two pieces 4 inches by 8 inches.

(2) Place both pieces of the material on the table face up, and squarely over each other.

(3) Mark a line on the top piece of the material on the right side of material 1/2 inch from edge (8-inch length).

(4) Sew both pieces of material together with a simple seam, following the markings made 1/2-inch from the edge. Tack the stitch lines at both ends with a 1-inch tack (no less than 7/8-inch or no more than 1 1/8 inches).

(5) Fold the bottom piece of material to the right, 1/2-inch seams up and also folded to the right.

(6) Mark the edge of right material 1/2 inch from the edge (face side).

(7) Fold the edge of the material on the 1/2-inch markings. Fold material over so that the folded 1/2-inch edge overlaps the simple seam 1/8 inch.

(8) Sew a row of stitches 1/16 inch from the folded edge. Make certain to tack both ends of the seam (1 inch tack). No less than 7/8 inch or no more than 1 1/8 inches.

(9) Press the seam area flat with an iron.

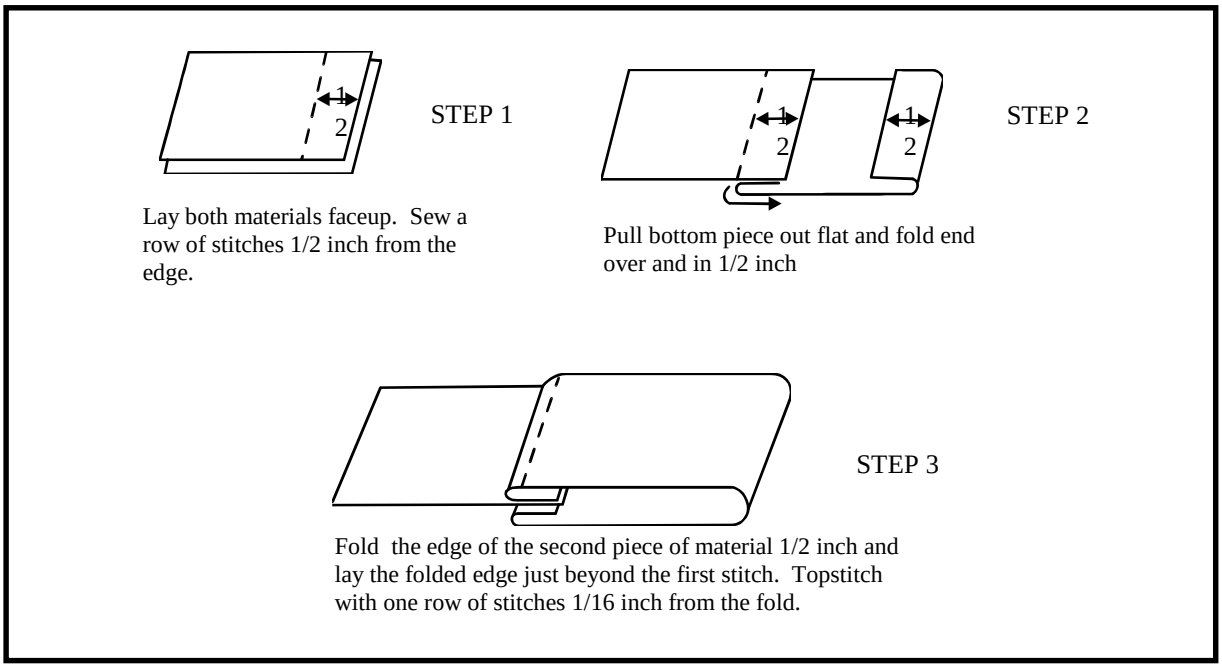

Figure 3-13. Seam type 5

g. Seam Type 6. Seam type 6 (Figure 3-14) is a simple seam topstitched to enclose the raw edges. It is used to finish the edge on cuffs, collars, and pocket flaps. This seam is also used to sew welts on side pockets. To make seam type 6--

(1) Cut an 8- by 8-inches piece of material into two pieces 4 inches by 8 inches.

(2) Place the two pieces squarely over each other, and face to face.

(3) Mark the top piece of material 1/2 inch from the right edge (8-inch length).

(4) Make certain the marked edges are even.

(5) Join the two pieces of the material together by sewing with a simple seam. Tack the stitch lines at both ends with a 1-inch tack. (no less than 7/8 inch, or no more than 1 1/8 inches).

(6) Fold the bottom piece of the material to the right and press the seams open with an iron.

(7) Fold the right material over the left piece of material. (At this point, the simple seam is at the operator's right and the top material is face up).

(8) Mark the top material 1/4 inch from the right edge (this is where the two materials are joined with a simple seam) across the length of material.

(9) Sew a row of stitches following the mark 1/4 inch from the right edge of both pieces of the material. Make sure the stitching is straight and evenly spaced 1/4 inch from the edge).

(10) Make sure each seam line has a 1-inch tack at both ends. (no less than 7/8 inch, no more than 1 1/8 inches).

(11) Press the seam area flat with an iron.

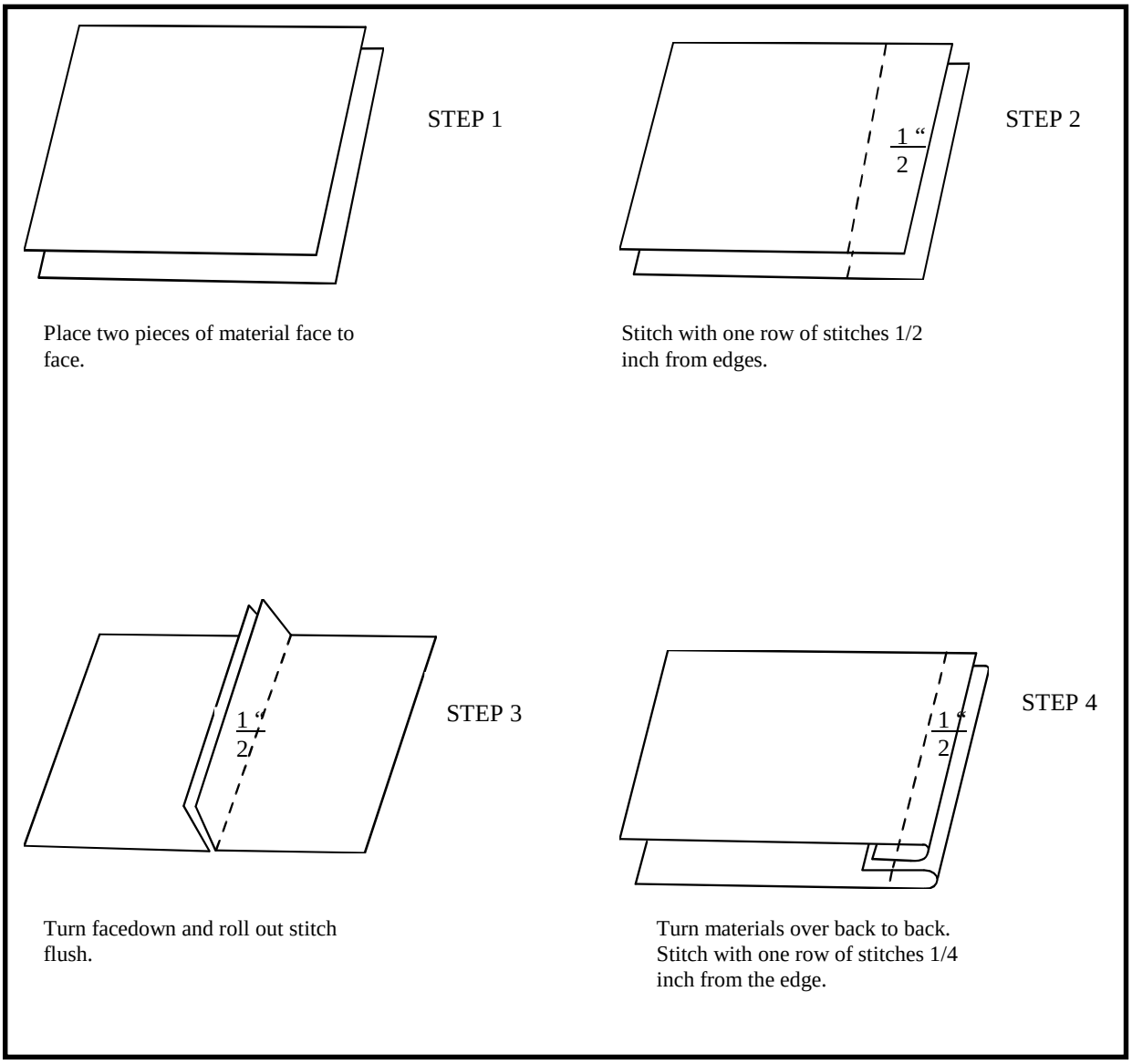

Figure 3-14. Seam type 6