C1, FM 10-500-53
MCRP 4-3.8
TO 13C7-18-41

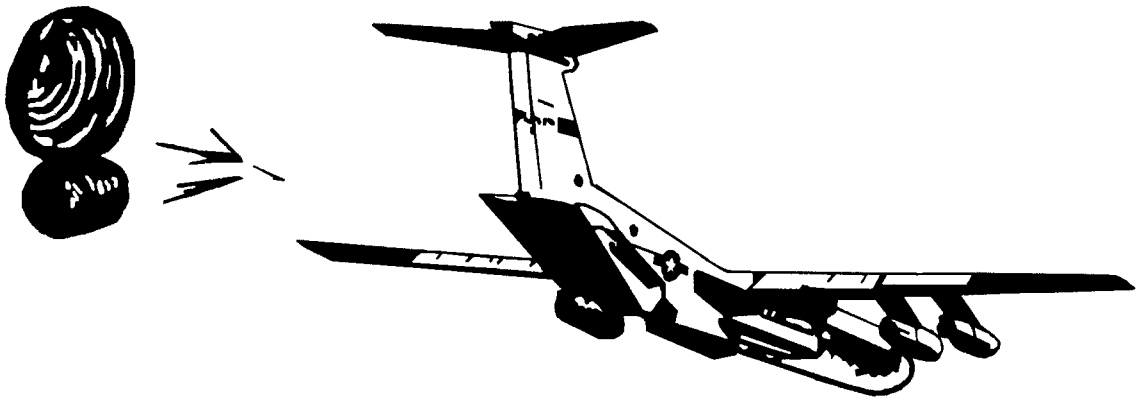

AIRDROP OF SUPPLIES AND EQUIPMENT:

RIGGING AMMUNITION

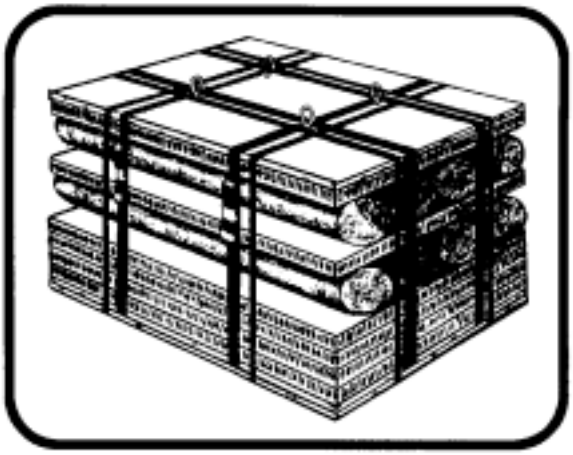

DISTRIBUTION RESTRICTION: Approved for public release; distribution is unlimited.

HEADQUARTERS
DEPARTMENT OF THE ARMY
UNITED STATES MARINE CORPS
DEPARTMENT OF THE AIR FOECE

HEADQUARTERS
DEPARTMENT OF THE ARMY
UNITED STATES MARINE CORPS
DEPARTMENT OF THE AIR FORCE

Change 1 Washington, DC, 24 July 2000

AIRDROP OF SUPPLIES AND EQUIPMENT
RIGGING AMMUNITION

1. This change adds the ammunition loads that have been certified by the US Army Soldiers System Center since the publication of this manual.

2. Change FM 10-500-53, 19 AUG 1996, as follows:

Remove old pages	**Insert new pages**
Cover	Cover
i through iv	i through iv
1-13 through 1-16	1-13 through 1-16
1-21 through 1-28	1-21 through 1-28
1-31 through 1-34	1-31 through 1-34
1-37 and 1-38	1-37 and 1-38
1-41 and 1-42	1-41 and 1-42
1-45 through 1-47	1-45 through 1-50
2-33 and 2-34	2-33 and 2-34
2-41 and 2-42	2-41 and 2-42
2-45 and 2-46	2-45 and 2-46
2-61 and 2-62	2-61 and 2-62
	2-70.1 through 2-70.7
2-107 and 2-108	2-107 and 2-108
2-115 and 2-116	2-115 and 2-116
2-119 and 2-120	2-119 and 2-120
2-123 and 2-124	2-123 and 2-124
2-141 and 2-142	2-141 through 2-142.1
2-151	2-151 through 2-160
3-25 and 3-26	3-25 and 3-26
3-29 and 3-30	3-29 and 3-30
3-39 and 3-40	3-39 and 3-40
	3-42.1through 3-42.7
3-63 and 3-64	3-63 through 3-64
3-67 and 3-68	3-67 and 3-68
3-71 through 3-74	3-71 through 3-74
	3-89 through 3-97
	Appendix B
Glossary 1 through Glossary 3	Glossary 1 through Glossary 3

3. New or changed material is identified by a vertical bar in the margin opposite the changed material.

4. File this transmittal sheet in the front of the publication.

DISTRIBUTION RESTRICTION: Approved for public release; distribution is unlimited.

FM 10-500-53
MCRP 4-3.8
TO 13C7-18-41
24 JULY 2000

By Order of the Secretary of the Army:

ERIC K. SHINSEKI
General, United States Army
Chief of Staff

Official:

JOEL B. HUDSON
Administrative Assistant to the
Secretary of the Army
0014502

DISTRIBUTION:

Active Army, Army National Guard, and U. S. Army Reserve: To be distributed in accordance with the initial distribution number 110934, requirements for FM 10-500-53.

BY DIRECTION OF THE COMMANDANT OF THE MARINE CORPS

J. E. RHODES
Lieutenant General, U. S. Marine Corps
Commanding General
Marine Corps Combat Developmental Command

By Direction of the Department of the Air Force:

GEORGE T. BABBITT
General, USAF
Commander, AFMC

MICHAEL E. RYAN
General, USAF
Chief of Staff

FIELD MANUAL
NO 10-500-53
MARINE CORPS REFERENCE PUBLICATION
NO 4-3.8
TECHNICAL ORDER
NO 13C7-18-41

HEADQUARTERS
DEPARTMENT OF THE ARMY
UNITED STATES MARINE CORPS
DEPARTMENT OF THE AIR FORCE
Washington, DC, 19 AUGUST, 1996

AIRDROP OF SUPPLIES AND EQUIPMENT: RIGGING AMMUNITION

TABLE OF CONTENTS

		Paragraph	Page
PREFACE			iii
CHAPTER 1	INTRODUCTION		
	Special Instructions	1-1	1-1
	Parachute Requirements	1-2	1-1
	Equipment Required	1-3	1-1
	Missile Rigging Tables Instructions	1-4	1-1
	Additional Certified Munitions	1-5	1-1
CHAPTER 2	RIGGING A-22 CARGO BAG LOADS		
Section I	LOW-VELOCITY AIRDROP		
	Preparing A-22 Cargo Bag	2-1	2-1
	Special Instructions	2-2	2-1
	Parachute Requirements	2-3	2-1
Section II	HIGH-VELOCITY AIRDROP		
	Preparing A-22 Cargo Bag	2-4	2-71
	Special Instructions	2-5	2-71
	Parachute Requirements	2-6	2-72

DISTRIBUTION RESTRICTION: Distribution authorized to US government agencies only to protect technical or operational information from automatic dissemination under the International Exchange Program or by other means. This determination was made on 30 April 1992. Other requests for this document will be referred to Aerial Delivery and Field Services Department, USA Quartermaster Center and School, 1010 Shop Road, Fort Lee, VA 23801-1502.

DESTRUCTION NOTICE: Destroy by any method that will prevent disclosure of contents or reconstruction of the document.

***This publication supersedes Interim Manuscript FM 10-500-53/TO 13C7-18-41, October 1991.**
MARINE CORPS PCN: 14400000901

		Paragraph	Page
CHAPTER 3	RIGGING A-7A CARGO SLINGS AND A-21 CARGO BAG LOADS		
Section I	LOW-VELOCITY AIRDROP		
	Preparing A-7A Cargo Slings and A-21 Cargo Bags	3-1	3-1
	Special Instructions	3-2	3-1
	Parachute Requirements	3-3	3-1
Section II	HIGH-VELOCITY AIRDROP		
	Preparing A-7A Cargo Slings and A-21 Cargo Bags	3-4	3-43
	Special Instructions	3-5	3-43
	Parachute Requirements	3-6	3-43
Appendix A	Equipment Required		A-1
Appendix B	Fabrication of Honeycomb Bins		B-1
GLOSSARY			Glossary-1
REFERENCES			References-1
TABLES			
1-1	Parachute Requirements for Low-Velocity Airdrop		1-2
1-2	Parachute Requirements for High-Velocity Airdrop		1-2
1-3	Ammunition Rigging		1-3
1-4	Missile Rigging		1-46
1-5	Additional Certified Munitions		1-47

PREFACE

Scope

This manual tells and shows how to prepare and position certain types of ammunition and explosives in A-21 or A-22 cargo bags and A-7A cargo slings for low-velocity or high-velocity airdrop. This manual also lists the types of ammunition and explosives authorized to be airdropped with other low-velocity loads in FM l0-500/TO 13C7 series manuals. These procedures apply only to items listed in this manual.

Special Considerations

CAUTION

Explosives and ammunition must be handled with care at all times. The explosive elements in primers and fuzes are sensitive to shock and high temperatures. Rigging personnel will make sure that boxes or containers of explosives and ammunition are not dropped, thrown, tumbled, or dragged. These loads contain hazardous materials, explosives or ammunition, as defined in AFJMAN 24-204/TM 38-250. Complete Round Rigging, (CRR), encompasses all necessary munitions for mission completion (for example; primers, propelling charges, projections, fuzes) rigged on an airdrop platform or in a container. CRR is authorized only during wartime or periods of increased readiness. CRR will not be authorized during exercises. Hazardous materials must be packed, marked, and labeled according to AFJMAN 24-204/TM 38-250. Ammunition and explosives damaged by airdrop must be disposed of by qualified personnel. Follow these guidelines for hazardous materials.

a. Boxed Ammunition. Boxed ammunition should be rigged in the position that it is normally shipped, with the box lid on top.

b. Proximity Fuze. Proximity fuzes must be rigged in the "nose-down" position. If the fuze boxes are damaged, the fuzes should not be used.

User Information

The proponent of this publication is HQ TRADOC. You are encouraged to report any errors or omissions and to suggest ways for improving this manual. Army personnel, send your comments on DA Form 2028 directly to:

Aerial Delivery and Field Services Department
USA Quartermaster Center and School
1010 Shop Road
Fort Lee, Virginia 23801-1502

Air Force personnel, send your reports on AFTO Form 22 through:

Headquarters
AMC/DOTX
402 Scott Drive, Unit 3A1
Scott AFB, Illinois 62225-5302

Air Force personnel in Air Combat Command, send your reports on AFTO Form 22 through:

HQ ACC/DOTW
205 Dodd Blvd, Suite 101
Landley AFB, VA 23665-2789

Air Force personnel in Special Operations Command, send your reports on AFTO Form 22 through:

HQ AFSOC/DOXT
100 Bartley St., Suite 260
Hurlburt Field, FL 32544-5273

to:

Aerial Delivery and Field Services Department
USA Quartermaster Center and School
1010 Shop Road
Fort Lee, Virginia 23801-1502

Air Force personnel, send information copy AFTO Form 22 to:

SA-ALC/TILDP
485 Quentin Roosevelt Rd.
Kelly AFB, TX 78241-6421

Marine Corps personnel, send your comments to:

Commanding General
Marine Corps Combat Development Command
ATTN:WF12
Quantico, VA 22134-5010

Table 1-3. Ammunition rigging table (continued)

Item	A-22/Platform Low-Velocity	A-22 High-Velocity	A-7A/A-21 Low-Velocity	A-7A/A-21 High-Velocity
Cartridge, 40-mm, AP-T, M81 (DODAC 1310-B552) 1310-00-309-4934 1310-00-309-4929 1310-00-554-0092 1310-00-039-1123	2-12	2-78	3-3	3-39
Cartridge, 40-mm, HEI-T, SD, M3 (DODAC 1310-B559) 1310-00-309-4943 1310-00-309-4942 1310-00-039-1304	2-4	2-67	3-4	3-38
Cartridge, 40-mm, HE-T, SD, M3, MK11, MK2 (DODAC 1310-B562) 1310-00-039-1244 1310-00-309-4941 1310-00-309-4939 1310-00-039-1202	2-12	2-78	3-3	3-39
Cartridge, 40-mm, HE, Linked, M383E1 (DODAC 1310-B571) 1310-00-976-0907	2-9	2-73	3-7	
Cartridge, 40-mm, HE, Linked, M384 (DODAC 1310-B572) 1310-00-976-0908	2-9	2-79	3-7	
Cartridge, 40-mm, TP, M918 (DODAC 1310-B584) 1310-01-317-5948	2-8	2-76	3-11	3-46
60-Millimeter Ammunition				
Cartridge, 60-mm, Illuminating, M83A3 (DODAC 1310-B627) 1310-00-782-5518 1310-00-143-7056	2-13	2-80	3-4	

Table 1-3. Ammunition rigging table (continued)

Item	A-22/Platform Low-Velocity	A-22 High-Velocity	A-7A/A-21 Low-Velocity	A-7A/A-21 High-Velocity
Cartridge, 60-mm, Smoke, WP, M302A1 (DODAC 1310-B630) 1310-00-935-9129 1310-00-935-6189 1310-00-926-3951	2-13	2-80	3-13	3-34
Cartridge, 60-mm, HE, M49A4 (DODAC 1310-B632) 1310-00-028-4944 1310-00-926-9428	2-11	2-81	3-7	3-47
Cartridge, 60-mm, HE, M720 (DODAC 1310-B642) 1310-01-022-7680	2-54	2-125	3-31	3-48
Cartridge, 60-mm, HE, M720E1 with M734A1 Fuze (DODAC 1310-B642) 1310-01-022-7680	2-54	2-125.1	3-31	3-48.1
Cartridge, 60-mm, Smoke, WP, M722 (DODAC 1310-B646) 1310-01-236-1354	2-54	2-125	3-31	3-48
Cartridge, 60-mm, Illuminating, M721 (DODAC 1310-B647) 1310-01-258-8689	2-54	2-125	3-31	3-48
Cartridge, 60-mm, Illuminating, Infrared M767 (DODAC 1310-BA04) 1310-01-438-6964	2-54	2-125	3-31	3-48
81-Millimeter Ammunition				
Cartridge, 81-mm, HE, M362 (DODAC 1315-C222) 1315-00-892-3968 1315-00-602-6677 1315-00-182-3426 1315-00-702-0724	2-9	2-73	3-7	3-49

Table 1-3. Ammunition rigging table (continued)

Item	A-22/Platform Low-Velocity	A-22 High-Velocity	A-7A/A-21 Low-Velocity	A-7A/A-21 High-Velocity
Cartridge, 81-mm, HE, M372 (DODAC 1315-C223) 1315-00-542-0179	2-9	2-73	3-7	3-49
Cartridge, 81-mm, HE, M43A1 (DODAC 1315-C225) 1315-00-585-1739 1315-00-028-4968 1315-00-555-4778	2-9	2-73	3-7	3-49
Cartridge, 81-mm, Illuminating, M301A3 (DODAC 1315-C226) 1315-00-143-7048 1315-00-164-5290 1315-00-143-7122 1315-00-028-4964 1315-01-277-5554	2-14	2-82	3-4	3-38
Cartridge, 81-mm, Smoke, WP, M57 (DODAC 1315-C230) 1315-00-682-4626 1315-00-729-6566 1315-00-028-4992 1315-00-603-7768 1315-00-935-9210 1315-00-028-4985 1315-00-540-8499	2-15	2-83	3-7	3-49
Cartridge, 81-mm, HE, M374A2 (DODAC 1315-C236) 1315-00-143-7184 1315-00-935-6033	2-9	2-73	3-7	3-38
Cartridge, 81-mm, HE, M374A2 with Fuze, M524A5 (DODAC 1315-C256) 1315-00-935-1931	2-9	2-73	3-7	3-38
Cartridge, 81-mm, HE, M374A2 with Fuze, M524A6 (DODAC 1315-C256) 1315-00-498-6407	2-9	2-73	3-7	3-38

Table 1-3. Ammunition rigging table (continued)

Item	A-22/Platform Low-Velocity	A-22 High-Velocity	A-7A/A-21 Low-Velocity	A-7A/A-21 High-Velocity
Cartridge, 81-mm, HE, M374A2 with Fuze, M567 (DODAC 1315-C256) 1315-00-134-8984	2-9	2-73	3-7	3-38
Cartridge, 81-mm, HE, M374A2 with Fuze, M716 (DODAC 1315-C256) 1315-00-935-6030	2-9	2-73	3-7	3-38
Cartridge, 81-mm, Smoke, WP, M375A2 with Fuze, PD524A6 (DODAC 1315-C276) 1315-00-498-6406	2-9	2-73	3-7	3-38
Cartridge, 81-mm, HE, M821A1, M821A2 with Fuze, M734A1 (DODAC 1315-C868) 1315-01-353-7618	2-61.2	2-135	3-33.2	3-72
Cartridge, 81-mm, HE, M889A1 (DODAC 1315-C869) 1315-01-353-7619	2-61.2	2-135	3-33.2	3-72
84-Millimeter Ammunition				
Cartridge, 84-mm, M136 with Launcher (AT4) (DODAC 1315-C995) 1315-01-245-4950	2-16	2-84		
90-Millimeter Ammunition				
Cartridge, 90-mm, WP, M313C (DODAC 1315-C258) 1315-00-147-5895 1315-00-892-1593 1315-00-892-1594	2-17	2-85	3-3	3-39
Cartridge, 90-mm, HE, M71 (DODAC 1315-C265) 1315-00-028-4438	2-17	2-85	3-3	3-39

Table 1-3. Ammunition rigging table (continued)

Item	A-22/Platform Low-Velocity	A-22 High-Velocity	A-7A/A-21 Low-Velocity	A-7A/A-21 High-Velocity
Cartridge, 105-mm, Smoke, WP, M60 (DODAC 1315-C454) 1315-00-028-4831 1315-00-439-6122 1315-00-145-7536 1315-00-113-8149 1315-00-892-4895 1315-00-470-5368 1315-00-143-7616 1315-00-439-6121 1315-00-892-4999 1315-00-113-5741 1315-00-316-0269	2-17	2-85	3-3	3-39
Cartridge, 105-mm, HE, M444 (DODAC 1315-C462) 1315-00-797-7199 1315-00-461-3323 1315-00-965-0739	2-17	2-85	3-3	3-39
Cartridge, 105-mm, HE, XM548E1 (DODAC 1315-C463) 1315-00-926-4069	2-23	2-89	3-3	3-39
Cartridge, 105-mm, Tactical, CS, M629 (DODAC 1315-C468) 1315-00-143-7128	2-17	2-85	3-3	3-39
Cartridge, 105-mm, HE, M760 (DODAC 1315-C473) 1315-01-189-7764	2-17		3-3	
Cartridge, 105-mm, Smoke, WP, M60 (DODAC 1315-C477) 1315-00-228-6284 1315-00-228-6282 1315-00-228-6283	2-17	2-85	3-3	3-39

Table 1-3. Ammunition rigging table (continued)

Item	A-22/Platform Low-Velocity	A-22 High-Velocity	A-7A/A-21 Low-Velocity	A-7A/A-21 High-Velocity
Cartridge, 105-mm, APDS-T, M728 (DODAC 1315-C494) 1315-00-378-9842 1315-00-001-7868	2-23	2-89	3-3	3-39
Cartridge, 105-mm, APDS-T, M392A2 (DODAC 1315-C505) 1315-01-030-6837	2-23	2-89	3-3	3-39
Cartridge, 105-mm, HEAT-T, M456A1E2 (DODAC 1315-C508) 1315-01-094-5294 1315-01-023-7122 1315-00-889-2095 1315-00-926-3989 1315-00-756-2886 1315-00-058-0579	2-23, 2-24	2-89, 2-90	3-3, 3-16	3-39, 3-56
Cartridge, 105-mm, TP-T, M490 (DODAC 1315-C511) 1315-01-107-2513 1315-01-090-0168 1315-00-965-0713 1315-01-161-3683	2-23, 2-24	2-89, 2-90	3-3, 3-16	3-39, 3-56
Cartridge, 105-mm, Smoke, WP-T, M416 with Fuze BD M534A1 (DODAC 1315-C512) 1315-00-901-4921 1315-00-143-7183	2-23	2-89	3-3	3-39

Table 1-3. Ammunition rigging table (continued)

Item	A-22/Platform Low-Velocity	A-22 High-Velocity	A-7A/A-21 Low-Velocity	A-7A/A-21 High-Velocity
Cartridge, 105-mm, APERS-T, M546 with Fuze, MT, M563 (DODAC 1315-C513) 1315-00-143-7121 1315-00-935-1977 1315-00-143-7768 1315-00-935-1980 1315-00-935-9178	2-17	2-85	3-3	3-39
Cartridge, 105-mm, HEP-T, M393A2 (DODAC 1315-C518) 1315-00-935-6128 1315-00-063-8832 1315-00-728-0704	2-23	2-89	3-3	3-39
Cartridge, 105-mm, APER-T, M494, with Fuze, M571 (DODAC 1315-C519) 1315-00-143-5930 1315-00-935-6154	2-23	2-89	3-3	3-39
Cartridge, 105-mm, APFSDS-T, M833 (DODAC 1315-C524) 1315-01-136-9631	2-25	2-91	3-15	3-69
Cartridge, 105-mm, APFSDS-T, M900E1 (DODAC 1315-C543) 1315-01-324-6633	2-26	2-92	3-17	3-51
Cartridge, 105-mm, HERA, M913 in PA117 Containers (DODAC 1315-C546) 1315-01-250-2857	2-61.4	2-137	3-33.4	3-74
4.2-Inch Ammunition				
Cartridge, 4.2-in, HE, w/o Fuze (DODAC 1315-C697) 1315-01-211-8411	2-18	2-94	3-19	3-53
Cartridge, 4.2-in, HE, M329A1 (DODAC 1315-C704) 1315-00-028-5016 1315-00-782-5850	2-19	2-95	3-3	3-36

Table 1-3. Ammunition rigging table (continued)

Item	A-22/Platform Low-Velocity	A-22 High-Velocity	A-7A/A-21 Low-Velocity	A-7A/A-21 High-Velocity
Cartridge, 4.2-in, HE, M329A1 (DODAC 1315-C705) 1315-00-935-9140 1315-00-028-5017 1315-00-723-3724	2-19	2-95	3-3	3-36
Cartridge, 4.2-in, Illuminating, M335A2 (DODAC 1315-C706) 1315-00-761-2073 1315-00-482-8452 1315-01-129-9337	2-19	2-95	3-3	3-36
Cartridge, 4.2-in, Smoke, WP, M328A1 (DODAC 1315-C708) 1315-00-935-9214 1315-00-008-7787 1315-00-485-6032 1315-00-935-9131 1315-00-965-0846	2-19	2-95	3-3	3-36
106-Millimeter Ammunition				
Cartridge, 106-mm, HEAT, M344A1 (DODAC 1315-C650) 1315-00-141-0232 1315-00-343-3612 1315-01-965-0564	2-17	2-85	3-3	3-39
Cartridge, 106-mm, HEP-T, M346A1 (DODAC 1315-C651) 1315-00-926-4019 1315-00-173-7353 1315-00-343-3613 1315-00-028-4791 1315-00-470-5410	2-17	2-85	3-3	3-39
Cartridge, 106-mm, APERS-T, M581 (DODAC 1315-C660) 1315-00-926-9275	2-17	2-85	3-3	3-39

Table 1-3. Ammunition rigging table (continued)

Item	A-22/Platform Low-Velocity	A-22 High-Velocity	A-7A/A-21 Low-Velocity	A-7A/A-21 High-Velocity
120-Millimeter Ammunition				
Cartridge, 120-mm, HE, M934/ M934A1 with M734A1 Fuze (DODAC 1315-C379) 1315-01-335-5016	2-28	2-93	3-18	3-52
Cartridge, 120-mm, APFSDS-T, M829A1 (DODAC 1315-C380) 1315-01-269-2256	2-27			
Cartridge, 120-mm, HE, M933 (DODAC 1315-C623) 1315-01-343-1941	2-28	2-93	3-18	3-52
Cartridge, 120-mm, Smoke, WP, M929 with Fuze, PD, M745 or M734A1 (DODAC 1315-C624) 1315-01-343-1940	2-28	2-93	3-18	3-52
Cartridge, 120-mm, APFSDS-T, M829 (DODAC 1315-C786) 1315-01-226-7418	2-29			
Cartridge, 120-mm, HEAT-MP-T, M830 (DODAC 1315-C787) 1315-01-232-4638	2-29			
Cartridge, 120-mm, HE, M57 (DODAC 1315-C788) 1315-01-315-1328	2-30	2-96	3-20	3-54
Cartridge, 120-mm, Illumination, M91 (DODAC 1315-C790) 1315-01-315-1329	2-30	2-96	3-20	3-54
Cartridge, 120-mm, HEAT-MP-T, M830A1 (DODAC 1315-C791) 1315-01-333-0534	2-31			

Table 1-3. Ammunition rigging table (continued)

Item	A-22/Platform Low-Velocity	A-22 High-Velocity	A-7A/A-21 Low-Velocity	A-7A/A-21 High-Velocity
Cartridge, 120-mm, APFSDS-T, M829A2 (DODAC 1315-C792) 1310-01-361-5023	2-31			
152-Millimeter Ammunition				
Cartridge, 152-mm, TD-T, M411E3 (DODAC 1320-D380) 1320-00-935-2018	2-32	2-97	3-21	3-55
Cartridge, 152-mm, HEAT-MP, M409E6 (DODAC 1320-D381) 1320-00-143-5832 1320-00-491-0420 1320-00-182-3432	2-33, 2-34	2-98, 2-99	3-16	3-56
Cartridge, 152-mm, Canister, M625A1 (DODAC 1320-D390) 1320-00-496-9733 1320-00-159-3191 1320-00-926-4103	2-33, 2-34	2-98, 2-99	3-16	3-56
155-Millimeter Ammunition				
Charge, Propelling, 155-mm, M19 (DODAC 1320-D480) 1320-00-028-4369 1320-00-028-4371	2-35	2-100	3-22	3-57
Projectile, 155-mm, Gas, Persistent, HD, M104, (DODAC 1320-D484) 1320-00-529-7350 1320-00-028-4328	2-35	2-100	3-22	3-57
Projectile, 155-mm, HE, M101 (DODAC 1320-D485) 1320-00-028-4350 1320-00-529-7348	2-35	2-100	3-22	3-57

Table 1-3. Ammunition rigging table (continued)

Item	A-22/Platform Low-Velocity	A-22 High-Velocity	A-7A/A-21 Low-Velocity	A-7A/A-21 High-Velocity
Projectile 155-mm, Smoke, WP, M104 (DODAC 1320-D487) 1320-00-529-7347	2-35	2-100	3-22	3-57
Reducer, Flash, Propelling Charge, M1 (DODAC 1320-D490) 1320-00-028-4366 1320-00-028-4367	2-35	2-100	3-22	3-57
Projectile 155-mm, HE, ADAM, M692 (DODAC 1320-D501) 1320-00-434-8856 1320-01-261-6043	2-35	2-100	3-22	3-57
Projectile 155-mm, HE, ADAM, M731 (DODAC 1320-D502) 1320-00-434-8861 1320-01-260-8719	2-35	2-100	3-22	3-57
Projectile 155-mm, AT, RAAMS, M718 (DODAC 1320-D503) 1320-00-050-6059 1320-01-268-0387	2-35	2-100	3-22	3-57
Projectile 155-mm, Illuminating, M485A2 (DODAC 1320-D505) 1320-00-926-9388 1320-01-935-2091	2-35	2-100	3-22	3-57
Projectile 155-mm, HC, HE, M116E2 (DODAC 1320-D506) 1320-00-926-9276	2-35	2-100	3-22	3-57
Projectile 155-mm, AT, RAAMS, M741 (DODAC 1320-D509) 1320-01-050-7966 1320-01-268-0386	2-35	2-100	3-22	3-57

Table 1-3. Ammunition rigging table (continued)

Item	A-22/Platform Low-Velocity	A-22 High-Velocity	A-7A/A-21 Low-Velocity	A-7A/A-21 High-Velocity
Projectile 155-mm, HEAT, M712, Copperhead (DODAC 1320-D510) 1320-01-077-4279	2-36	2-101		
Projectile 155-mm, HE, RAAM-L, M718A1 (DODAC 1320-D515) 1320-01-151-9849	2-35	2-100	3-22	3-57
Projectile 155-mm, Smoke, WP, M825 (DODAC 1320-D528) No NSN	2-35	2-100	3-23	3-57
Projectile 155-mm, M795 (DODAC 1320-D529) 1320-01-086-0285 1320-01-457-4059	2-35	2-100	3-22	3-57
Charge, Propelling, 155-mm, M203A1 (DODAC 1320-D532) 1320-01-033-9394 1320-01-202-8938	2-35	2-100	3-22	3-57
Charge, Propelling, 155-mm, M119A1 and M119A2 (DODAC 1320-D533) 1320-00-143-5847 1320-01-051-4132 1320-01-093-5856	2-35	2-100	3-22	3-57
Charge, Propelling, 155-mm, M3 and M3A1 (DODAC 1320-D540) 1320-00-028-4876 1320-00-028-4873 1320-00-935-1922	2-35	2-100	3-22	3-57
Charge, Propelling, 155-mm, M4A1/M3A2 (DODAC 1320-D541) 1320-00-767-9441 1320-00-028-4879 1320-00-935-1923	2-35	2-100	3-22	3-57

Table 1-3. Ammunition rigging table (continued)

Item	A-22/Platform Low-Velocity	A-22 High-Velocity	A-7A/A-21 Low-Velocity	A-7A/A-21 High-Velocity
Charge, Propelling, 8-in, M1 (DODAC 1320-D675) 1320-00-028-4374	2-38	2-103		
Charge, Propelling, 8-in, M2 (DODAC 1320-D676) 1320-00-028-4378	2-38	2-103		
Projectile, 8-in, HE, M106 (DODAC 1320-D680) 1320-00-542-0728 1320-01-257-7961 1320-00-529-7335 1320-00-028-4359	2-38	2-103		
Reducer, Flash, Propelling, Charge, M3 (DODAC 1320-D681) 1320-00-542-0728	2-38	2-103		
Projectile, 8-in, HE, M404 (DODAC 1320-D684) 1320-00-769-0275 1320-00-986-9731	2-38	2-103		
Grenades				
Grenade, Discharger, Anti-Riot, Irritant, XL96E1 (DODAC 1330-FZ14) 1330-01-459-4018	2-61.7	2-141	3-33.7	3-79
Grenade, Discharger, Anti-Riot, Irritant, XL97E1 (DODAC 1330-FZ15) 1330-01-459-4032	2-61.7	2-141	3-33.7	3-79
Grenade, 40-mm, Smoke, Screening, L8A3 (DODAC 1330-G815) 1330-01-124-5031	2-40	2-104	3-24	3-58
Launcher, Grenade, 40-mm, Smoke, IR Screening, M76 (DODAC 1330-G826) 1330-01-171-8869	2-41	2-105	3-25	3-59

Table 1-3. Ammunition rigging table (continued)

Item	A-22/Platform Low-Velocity	A-22 High-Velocity	A-7A/A-21 Low-Velocity	A-7A/A-21 High-Velocity
Cartridge, Grenade,Rifle, NATO, 7.62-mm, M64 (DODAC 1330-G839) 1330-00-301-1989	2-10	2-74	3-1	3-47
Grenade, Hand, Fragmentation, M26 or M26A1 (DODAC 1330-G890) 1330-00-028-5832 1330-00-301-1970	2-9	2-73	3-26	3-60
Grenade, Hand, Incendiary, TH-3, AN-M14 with Fuse, M201A1 (DODAC 1330-G900) 1330-00-219-8557	2-10	2-74	3-13	3-34
Grenade, Hand, Offensive, MK3A2 with Fuse (DODAC 1330-G911) 1330-00-143-5807 1330-00-194-2768	2-42	2-106	3-7	3-47
Grenade, Hand, Smoke, HC, ABC, AN-M18 with Fuse (DODAC 1330-G930) 1330-00-219-8511	2-43	2-81	3-27	3-47
Grenade, Hand, Green Smoke, M18, with Fuse (DODAC 1330-G940) 1330-00-540-9147 1330-00-289-6854	2-43	2-81	3-27	3-47
Grenade, Hand, Yellow Smoke, M18, with Fuse (DODAC 1330-G945) 1330-00-540-9145 1330-00-289-6851	2-43	2-81	3-27	3-47
Grenade, Hand, Red Smoke, M18, with Fuse (DODAC 1330-G950) 1330-00-289-6852	2-43	2-81	3-27	3-47
Grenade, Hand, Violet Smoke, M18, with Fuse M201A1 (DODAC 1330-G955) 1330-00-289-6853	2-43	2-81	3-27	3-47

Table 1-3. Ammunition rigging table (continued)

Item	A-22/Platform Low-Velocity	A-22 High-Velocity	A-7A/A-21 Low-Velocity	A-7A/A-21 High-Velocity
Grenade, Hand, Riot, Control, M7A3 with Fuze (DODAC 1330-G963) 1330-00-965-0802 1330-00-128-1027 1330-00-799-8816	2-43	2-81	3-27	3-47
Launcher, Grenade, Smoke, MM/IR, Screening, M81 (DODAC 1330-GG01) 1330-01-412-5778	2-44	2-107	3-28	3-61
Launcher, Grenade, Smoke, Screening, TA, M90 (DODAC 1330-GG03) 1330-01-449-9600	2-61.3	2-136	3-33.3	3-73
Launcher and Grenade, Smoke,HC, WP, M176 (DODAC 1330-HO50) 1330-00-930-8945	2-45	2-108		
Rockets				
Rocket, 83-mm, HEDP, BDM (DODAC 1340-HA08) 1340-01-443-5477	2-61.5	2-138	3-33.5	3-71.4
Rocket, 2.75-in, WP, M259 (DODAC 1340-H116) 1340-01-049-1882	2-47	2-109		
Rocket, 2.75-in, with WHD, HE, M151 with Fuze M440 and Motor MK40 Mod 3 (DODAC 1340-H161) 1340-00-003-1102	2-47, 2-49	2-112, 2-113		
Rocket, 2.75-in, HE, w/M151, HYDRA (DODAC 1340-H163) 1340-01-108-8851	2-47	2-110		
Rocket, 2.75-in, FLARE, HYDRA (DODAC 1340-H181) 1340-01-249-7721	2-46	2-111		

Table 1-3. Ammunition rigging table (continued)

Item	A-22/Platform Low-Velocity	A-22 High-Velocity	A-7A/A-21 Low-Velocity	A-7A/A-21 High-Velocity
Rocket, 2.75-in, with WHD, WDU-4A/A and Motor MK40 Mod 3 (DODAC 1340-H459) 1340-00-223-7224 1340-00-401-4460	2-47, 2-49	2-112, 2-113		
Rocket, 2.75-in, MPSM, w/MK66 MOD 1, M261 (DODAC 1340-H464) 1340-01-108-8850	2-48	2-114		
Rocket, 2.75-in, WHD, HE, M229with Liners and Fuze M429 and Motor MK40 Mod 3 (DODAC 1340-H488) 1340-00-180-9909 1340-00-143-8446	2-49, 2-50	2-113, 2-115		
Rocket, 2.75-in, WHD, HE, M151with Fuze M429 and Motor MK40 Mod 3 (DODAC 1340-H489) 1340-00-223-7219 1340-00-143-8448	2-47, 2-49	2-112, 2-113		
Rocket, 2.75-in, WHD, HE, M151with Fuze M423 and Motor MK40 Mod 3 (DODAC 1340-H490) 1340-00-926-1945	2-47, 2-49	2-112, 2-113		
Rocket, 2.75-in, Smoke, WP, M156 with Fuze M423 and Motor MK40 Mod 3 (DODAC 1340-H519) 1340-00-406-7327 1340-00-912-4548	2-47	2-112		

Table 1-3. Ammunition rigging table (continued)

	A-22/Platform Low-Velocity	A-22 High-Velocity	A-7A/A-21 Low-Velocity	A-7A/A-21 High-Velocity
Smoke Pot, Floating (DODAC 1365-K867) 1365-00-598-5220	2-54	2-121	3-8	3-63
Thickener, Incendiary, Oil, M4 (DODAC 1365-K917) 1345-00-926-4076 1345-00-143-7139	2-53	2-122		
Starter, Fire, NP3, M2 (DODAC 1370-L621) 1370-00-009-9596	2-59	2-131		
Flare and Signal Items				
Signal, Illuminating, A/C, Single Star, AN-M43A2, Red (DODAC 1370-L231) 1370-00-618-5790 1370-00-028-5970	2-13	2-80	3-7	3-38
Signal, Illuminating, A/C, Single Star, AN-M45A2, Green (DODAC 1370-L233) 1370-00-618-2402 1370-00-028-5967	2-13	2-80	3-7	3-38
Signal, Illuminating, Ground, M195, Green Star (DODAC 1370-L305) 1370-00-182-3408	2-54	2-125	3-1	3-34
Signal, Illuminating, Ground, M158, Red Star (DODAC 1370-L306) 1370-00-756-2591	2-54	2-125	3-1	3-34

Table 1-3. Ammunition rigging table (continued)

Item	A-22/Platform Low-Velocity	A-22 High-Velocity	A-7A/A-21 Low-Velocity	A-7A/A-21 High-Velocity
Signal, Illuminating, Ground, M159, White Star (DODAC 1370-L307) 1370-00-756-2588	2-54	2-125	3-1	3-34
Signal, Illuminating, Ground Parachute, M126A1 (DODAC 1370-L311) 1370-00-629-2336	2-54	2-125	3-1	3-34
Signal, Illuminating, Parachute, M127A1, White Star (DODAC 1370-L312) 1370-00-753-1859	2-54	2-125	3-1	3-34
Signal, Illuminating, Ground, Cluster M125A1 (DODAC 1370-L314) 1370-00-629-2335	2-54	2-125	3-1	3-34
Signal,Smoke, Parachute, M129A1, Red (DODAC 1370-L323) 1370-00-301-1132	2-54	2-125	3-1	3-34
Signal,Smoke, Parachute, M128A1, Green, (DODAC 1370-L324) 1370-00-301-1131	2-54	2-125	3-1	3-34
Signal, Underwater Sound, MK61, Mod O (NALC SW08) 1361-00-065-7733	2-60	2-133	3-33	3-71
Signal, Underwater Sound, MK82, Mod O (NALC SW32) 1361-00-167-8202	2-60	2-133	3-33	3-71

Table 1-3. Ammunition rigging table (continued)

Item	A-22/Platform Low-Velocity	A-22 High-Velocity	A-7A/A-21 Low-Velocity	A-7A/A-21 High-Velocity
Cap, Blasting, Special, Non-electric, M7 (DODAC 1375-M131) 1375-00-028-5226	2-45	2-108	3-4	3-38
Destructor, Explosive, Universal, M10 (DODAC 1375-M241) 1375-00-028-5171	2-54	2-125	3-31	3-48
Charge, Demolition, Shaped, HJE, 15-lb, M2A3 (DODAC 1375-M420) 1375-00-935-1924 1375-00-028-5237 1375-00-529-7698	2-57	2-129	3-21	3-55
Charge, Demolition, Shaped, 40-lb, M3 (DODAC 1375-M421) 1375-00-088-6691 1375-00-028-5241	2-13	2-67	3-21	3-55
Detonator, Percussion, M1A2, 15-sec Delay (DODAC 1375-M450) 1375-00-729-4378	2-52	2-108	3-21	3-55
Chord, Detonating, Reinforced Pliofilm/Wrapped Waterproof, Type I (DODAC 1375-M456) 1375-00-180-9356 1375-00-204-0851	2-19	2-86	3-4	3-65
Dynamite, Military, M1 (DODAC 1375-M591) 1375-00-724-9613	2-4	2-67	3-4	3-38
Firing Device, Demolition, M1A1, Pressure Type (DODAC 1375-M626) 1375-00-028-5178	2-58	2-130	3-4	3-65
Firing Device, Demolition, M5, Pressure - Release Type (DODAC 1375-M627) 1375-00-028-5192 1375-00-028-5190	2-42	2-87	3-7	3-47

Table 1-3. Ammunition rigging table (continued)

Item	A-22/Platform Low-Velocity	A-22 High-Velocity	A-7A/A-21 Low-Velocity	A-7A/A-21 High-Velocity
Firing Device, Demolition, M3, Pull-Release Type (DODAC 1375-M629) 1375-00-028-5188	2-10	2-74	3-13	3-34
Firing Device, Demolition, M3 Pull Type (DODAC 1375-M630) 1375-00-580-1392	2-52	2-87	3-3	3-38
Firing Device, Demolition, M1, Release Type (DODAC 1375-M631) 1375-00-028-5187	2-52	2-126	3-7	
Demolition Kit, Fighting Position Excavator, M300 (DODAC 1375-MN26) 1375-01-429-3510	2-61.6	2-139	3-33.6	3-76
Fuzes and Primers				
Fuze, MT, M565 (DODAC 1390-N248) 1390-00-993-5691	2-59	2-131	3-32	3-66
Fuze, MTSQ, M500 or M500A1 (DODAC 1390-N275) 1390-00-028-4911 1390-00-028-4908	2-59	2-131	3-32	3-66
Fuze, MTSQ, M501 or M501A1 (DODAC 1390-N276) 1390-00-028-4915 1390-00-305-0868	2-59	2-131	3-32	3-66
Fuze, MT, M564 (DODAC 1390-N278) 1390-00-889-2044 1390-01-032-6130	2-59	2-131	3-32	3-66

Table 1-3. Ammunition rigging table (continued)

	A-22/Platform Low-Velocity	A-22 High-Velocity	A-7A/A-21 Low-Velocity	A-7A/A-21 High-Velocity
Primer, Percussion, MK2A4 (DODAC 1390-N525) 1390-00-935-9234 1390-00-883-5532 1390-00-926-3924 1390-00-009-5571	2-59	2-131	3-27	3-68
Fuze, Delay, PD, MOD 1, MK399 (DODAC 1390-N659) 1390-01-263-8046	2-35, 2-38, 2-61.1	2-100, 2-103 2-134	3-22, 3-33.1	3-57, 3-78

Table 1-4. Missile rigging table

Missiles

DODAC	NSN	Item	FM/TO	Type of Airdrop
1427-PL23 1427-PM80	1427-00-163-8959 1427-01-273-1228	Guided Missile and Launcher Surface Attack (Dragon & Dragon II)	FM 10-552 TO 13C7-22-61	Low-Velocity Platform & A-22
1410-PA45	1410-00-150-8932	Guided Missile Surface Attack (Shillelagh)	FM 10-515 TO 13C7-1-81	Low-Velocity Platform
1410-PA66 1410-PD62 1410-PE96 1410-PV47 1410-PV83 1410-PU08 1410-PV18 1410-PV82 1410-PU07	1410-00-087-1521 1410-01-229-9948 1410-01-300-0254 1410-01-313-5367 1410-01-370-2288 1410-01-379-8253 1410-01-322-5333 1410-01-370-2289 1410-01-379-8244	Guided Missile Surface Attack (Tow, Tow 2A, & Tow 2B)	FM 10-517 TO 13C7-1-111 OR FM 10-529 TO 13C7-10-171	Low-Velocity Platform
1425-PJ02 1425-PJ04	1425-01-024-9982 1425-01-230-8785	Guided Missile , Intercept, Aerial (Stinger)	FM 10-550 TO 13C7-22-71	Low-Velocity A7A/A-21/ A-22/Platform
1410-PB82	1410-00-987-9432	Guided Missile, Heat, 140-mm, AT, M22B	FM 10-586 TO 13C7-22-11 OR FM 10-512 TO 13C7-1-8	Low-Velocity A7A/A-21

Table 1-5. Additional Certified Munitions

DODAC	NSN	Item	FM/TO	Type of Airdrop
1340-J143	1340-01-118-2838	5" Rocket Motor, Mk22 Mod 4	FM 10-555 TO 13C7-3-401	Low-Velocity Platform
1375-M913	1375-01-237-5933	Linear Demolition Charge	FM 10-555 TO 13C7-3-401	Low-Velocity Platform
1375-MM15	1375-01-380-1350	Selectable Lightweight Attack Munition (SLAM), M2, in reusable environmental plastic packs or in PA19 ammunition container	FM 10-500-3 TO 13C7-1-11 Chapter 8	Low-Velocity A-22
1375-MM16	1375-01-380-1378	Demolition Attack Munition (DAM), M3, in reusable environmental plastic packs or in PA19 ammunition container	FM 10-500-3 TO 13C7-1-11 Chapter 8	Low-Velocity A-22
*1375-MM15	1375-01-380-1350	Selectable Lightweight Attack Munition (SLAM), M2, in PA19 ammunition container	FM 10-500-3 TO 13C7-1-11 Chapter 9, Sec II	High-Velocity A-22
*1375-MM16	1375-01-380-1378	Demolition Attack Munition (DAM), M3, in PA19 ammunition container	FM 10-500-3 TO 13C7-1-11 Chapter 9, Sec II	High-Velocity A-22
1375-MM15	1375-01-380-1350	Selectable Lightweight Attack Munition (SLAM), M2, in reusable environmental plastic packs or in PA19 ammunition container	FM 10-500-3 TO 13C7-1-11 Chapters 3-6, Sec I & II	Low-Velocity A7A/A-21
1375-MM16	1375-01-380-1378	Demolition Attack Munition (DAM), M3, in reusable environmental plastic packs or in PA19 ammunition container	FM 10-500-3 TO 13C7-1-11 Chapters 4 & 6, Sec I & II	Low-Velocity A7A/A-21
1375-MM15	1375-01-380-1350	Selectable Lightweight Attack Munition (SLAM), M2, in PA19 ammunition container	FM 10-500-3 TO 13C7-1-11 Chapters 4&6, Sec III	Low-Velocity A7A/A-21
1375-MM16	1375-01-380-1378	Demolition Attack Munition (DAM), M3, in PA19 ammunition container	FM 10-500-3 TO 13C7-1-11 Chapters 4 & 6, Sec III	Low-Velocity A7A/A-21

Table 1-5. Additional Certified Munitions (continued)

DODAC	NSN	Item	FM/TO	Type of Airdrop
		****Modernized Demolition Initiators**		
1375-ML45	1375-01-415-1229	Holder, Blasting Cap, M9	FM 10-500-3 TO 13C7-1-11 Chapter 8	Low-Velocity A-22
1375-ML47	1375-01-415-1232	Cap, Blasting, Nonelectric, 30 foot Shock Tube, M11 (1.4B)		
1375-MN02	1375-01-415-1230	Cap, Blasting, Nonelectric, 500 foot Shock Tube, M12 (1.4S)		
1375-MN03	1375-01-415-1231	Cap, Blasting, Nonelectric, 1000 foot Shock Tube, M13 (1.4S)		
1375-MN06	1375-01-415-1233	Cap, Blasting, Nonelectric, Delay, M14 (1.4S)		
1375-MN07	1375-01-415-1234	Cap, Blasting, Nonelectric, Delay, M15		
1375-MN08	1375-01-415-1235	Ignitor, Time Blasting Fuze, M81, w/Shock Tube Capability (1.4S)		
		****Modernized Demolition Initiators**		
1375-ML45	1375-01-415-1229	Holder, Blasting Cap, M9	FM 10-500-3 TO 13C7-1-11 Chapters 3 & 4 (Sections I & II), Chapters 5 & 6 (Sections I & II)	Low-Velocity A7A/A-21
1375-ML47	1375-01-415-1232	Cap, Blasting, Nonelectric, 30 foot Shock Tube, M11 (1.4B)		
1375-MN02	1375-01-415-1230	Cap, Blasting, Nonelectric, 500 foot Shock Tube, M12 (1.4S)		
1375-MN03	1375-01-415-1231	Cap, Blasting, Nonelectric, 1000 foot Shock Tube, M13 (1.4S)		
1375-MN06	1375-01-415-1233	Cap, Blasting, Nonelectric, Delay, M14 (1.4S)		
1375-MN07	1375-01-415-1234	Cap, Blasting, Nonelectric, Delay, M15		
1375-MN08	1375-01-415-1235	Ignitor, Time Blasting Fuze, M81, w/Shock Tube Capability (1.4S)		
		Modernized Demolition Initiators		
1375-ML45	1375-01-415-1229	Holder, Blasting Cap, M9	FM 10-500-53 MCRP4-3.8 TO 13C7-18-41 Figure 2-140 and FM 10-500-3 TO 13C7-1-11 Chapter 9, Section II	High-Velocity A-22
1375-ML47	1375-01-415-1232	Cap, Blasting, Nonelectric, 30 foot Shock Tube, M11 (1.4B)		
1375-MN02	1375-01-415-1230	Cap, Blasting, Nonelectric, 500 foot Shock Tube, M12 (1.4S)		
1375-MN03	1375-01-415-1231	Cap, Blasting, Nonelectric, 1000 foot Shock Tube, M13 (1.4S)		
1375-MN06	1375-01-415-1233	Cap, Blasting, Nonelectric, Delay, M14 (1.4S)		
1375-MN07	1375-01-415-1234	Cap, Blasting, Nonelectric, Delay, M15		
1375-MN08	1375-01-415-1235	Ignitor, Time Blasting Fuze, M81, w/Shock Tube Capability (1.4S)		

Table 1-5. Additional Certified Munitions (continued)

DODAC	NSN	Item	FM/TO	Type of Airdrop
		Modernized Demolition Initiators		
1375-ML45 1375-ML47 1375-MN02 1375-MN03 1375-MN06 1375-MN07 1375-MN08	1375-01-415-1229 1375-01-415-1232 1375-01-415-1230 1375-01-415-1231 1375-01-415-1233 1375-01-415-1234 1375-01-415-1235	Holder, Blasting Cap, M9 Cap, Blasting, Nonelectric, 30 foot Shock Tube, M11 (1.4B) Cap, Blasting, Nonelectric, 500 foot Shock Tube, M12 (1.4S) Cap, Blasting, Nonelectric, 1000 foot Shock Tube, M13 (1.4S) Cap, Blasting, Nonelectric, Delay, M14 (1.4S) Cap, Blasting, Nonelectric, Delay, M15 Ignitor, Time Blasting Fuze, M81, w/Shock Tube Capability (1.4S)	FM 10-500-53 MCRP4-3.8 TO 13C7-18-41 Figure 3-77 and FM 10-500-3 TO 13C7-1-11 Chapters 4 & 6, Section III	High-Velocity A7A/A-21
***1375-MM50	1375-01-325-6826	Clipped Demolition Shaped Charge, M221, in the M2A1 Shipping and Storage Container	FM 10-500-3 TO 13C7-1-11 Chapter 8	Low-Velocity A22
***1375-MM50	1375-01-325-6826	Clipped Demolition Shaped Charge, M221, in the M2A1 Shipping and Storage Container	FM 10-500-3 TO 13C7-1-11 Chapter 9, Sec II	High-Velocity A22
***1375-MM50	1375-01-325-6826	Clipped Demolition Shaped Charge, M221, in the M2A1 Shipping and Storage Container	FM 10-500-3 TO 13C7-1-11 Chapters 3-6, Sec I & II	Low-Velocity A7A/A-21
***1375-MM50	1375-01-325-6826	Clipped Demolition Shaped Charge, M221, in the M2A1 Shipping and Storage Container	FM 10-500-3 TO 13C7-1-11 Chapters 3-6, Sec III	High-Velocity A7A/A-21

* These munitions must be encased in honeycomb when rigged for high-velocity airdrop

** The following restrictions apply to the Modernized Demolition Initiators (MDI), when rigged for low-velocity airdrop.

a. The containers (wooden crates) may be broken down into smaller packaging units.

(1) Individual corrugated cardboard boxes.
(2) Individual foil wrapped items.
(3) MDI items maybe rigged for airdrop up to their smallest unit of packaging.

Table 1-3. Ammunition rigging table (continued)

b. MDI items in their smallest unit of packaging must be encased in a honeycomb bin.

c. No container may be rigged on top of a honeycomb bin except another honeycomb bin.

d. Only honeycomb bins and corrugated cardboard boxes may be rigged on top of corrugated cardboard boxes.

e. Wooden crates can only be stacked on top of other wooden crates.

f. Corrugated cardboard boxes containing spools of shock tubing (M12, M13) must be positioned so the spools are lying flat on their base.

g. Center the load in the A7A/A-21 or A-22 container. Place honeycomb on all four sides of the bundle and secure the honeycomb with Type III nylon cord. Place a piece of honeycomb over the top of the load and position a piece of 3/4-inch plywood on top of the honeycomb. Close and secure the container.

*** These munitions must be encased in honeycomb when rigged for airdrop. Place a 3/4 X 12 X 6/14 - inch piece of plywood between the bottom of the M2A1 Shipping and Storage Container and the bottom piece of honeycomb encasing the munitions. Secure the honeycomb encasing the munitions with tape.

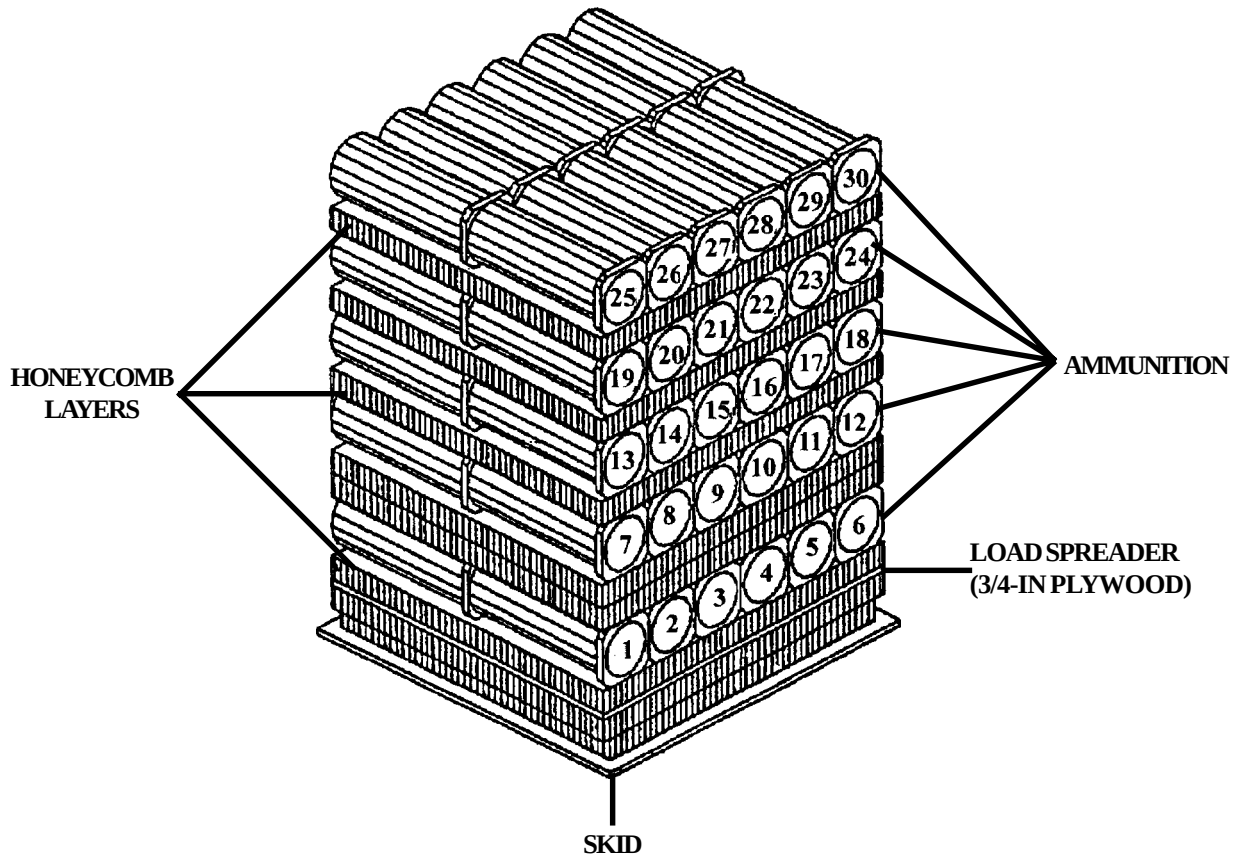

The following ammunition item is rigged in an A-22 cargo bag for low-velocity airdrop as shown in Figure 2-27.

120-Millimeter Ammunition

Cartridge, 120-mm, APFSDS-T, M829A1, (DODAC 1315-C380)

Figure 2-27. Ammunition layout in an A-22 cargo bag for low-velocity airdrop

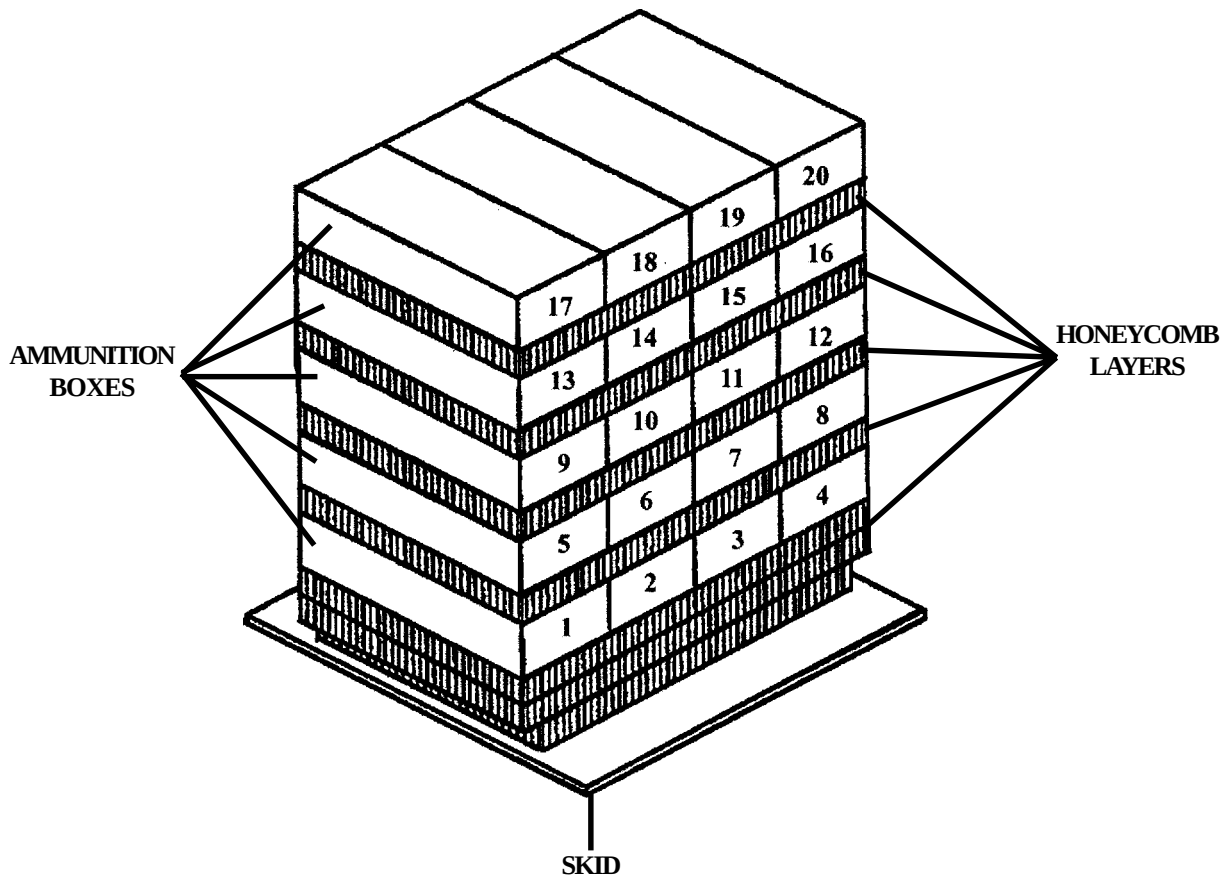

The following ammunition items are rigged in an A-22 cargo bag for low-velocity airdrop as shown in Figure 2-28.

120-Millimeter Ammunition

Cartridge, 120-mm, HE, M934 with or w/o Fuze M734A1 (DODAC 1315-C379)
Cartridge, 120-mm, HE, M933 with or w/o Fuze M734A1 (DODAC 1315-C623)
Cartridge, 120-mm, M929, Smoke, WP, w/ Fuze M745 or Fuze M734A1 (DODAC 1315-C624)

Figure 2-28. Ammunition layout in an A-22 cargo bag for low-velocity airdrop

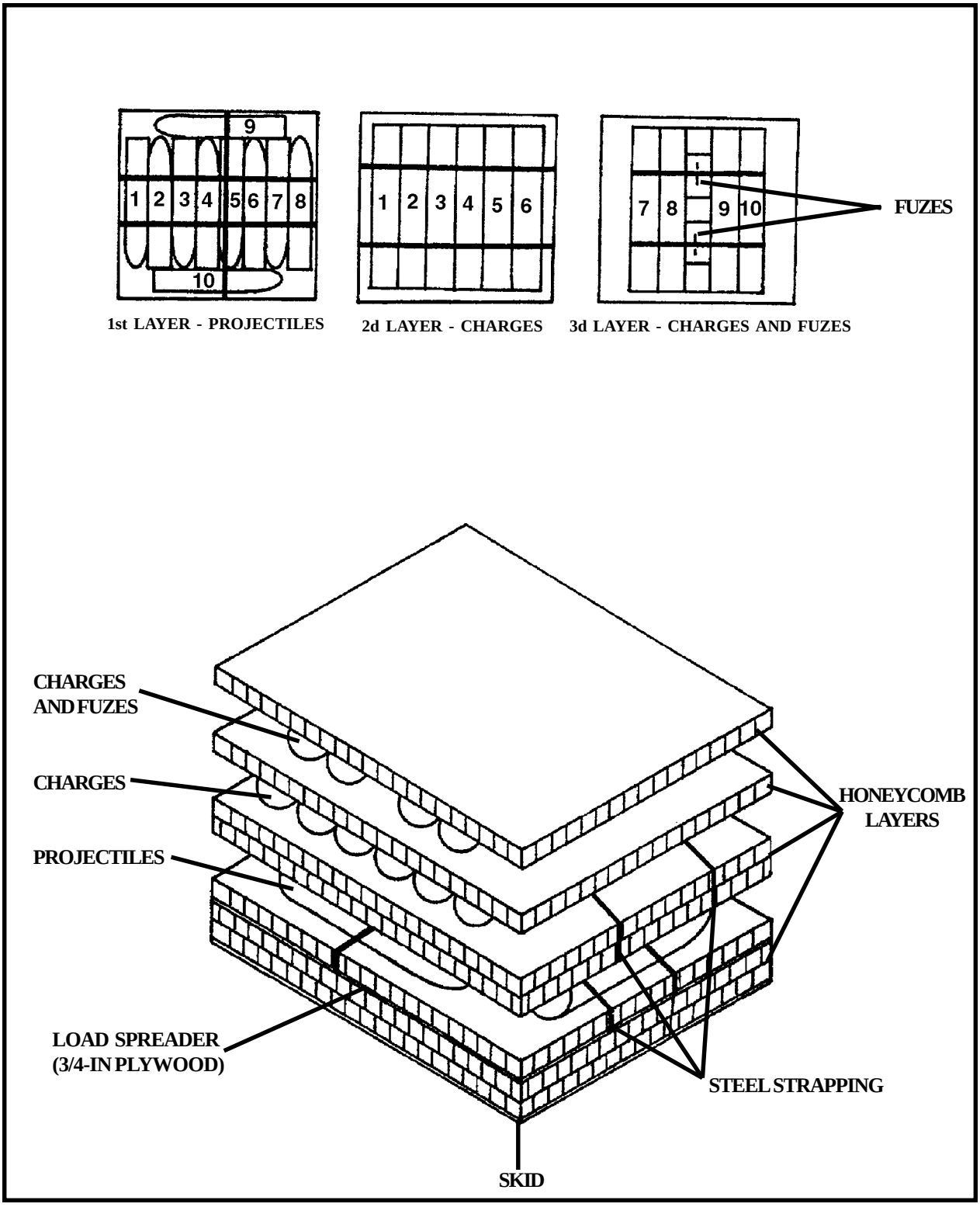

Figure 2-35. Ammunition layout in an A-22 cargo bag for low-velocity airdrop

The following ammunition items are rigged in an A-22 cargo bag for low-velocity airdrop as shown in Figure 2-35.

155-Millimeter Ammunition

Cartridge, Propelling, 155-mm, M19, (DODAC 1320-D480)
Projectile, 155-mm, Gas, Persistent, HD, M104, (DODAC 1320-D484)
Projectile, 155-mm, HE, M101, (DODAC 1320-D485)
Projectile, 155-mm, Smoke, WP, M104, (DODAC 1320-D487)
Reducer, Flash, Propelling Charge, M1, (DODAC 1320-D490)
Projectile, 155-mm, HE, ADAM, M692, (DODAC 1320-D501)
Projectile, 155-mm, HE, ADAM, M731, (DODAC 1320-D502)
Projectile, 155-mm, AT, RAAMS, M718, (DODAC 1320-D503)
Projectile, 155-mm, Illuminating, M485A2, (DODAC 1320-D505)
Projectile, 155-mm, HC, HE, M116E2, (DODAC 1320-D506)
Projectile, 155-mm, AT, RAAMS, M741, (DODAC 1320-D509)
Projectile, 155-mm, HE, RAAM-L, M718A1, (DODAC 1320-D515)
Projectile, 155-mm, M795, (DODAC 1320-D529)
*Charge, Propelling, 155-mm, M203A1, (DODAC 1320-D532)
*Charge, Propelling, 155-mm, M119A1 and M119A2, (DODAC 1320-D533)
*Charge, Propelling, 155-mm, M3 and M3A1, (DODAC 1320-D540)
*Charge, Propelling, 155-mm, M4A1 and M4A2, (DODAC 1320-D541)
Projectile, 155-mm, HE, M107, (DODAC 1320-D544)
Projectile, 155-mm, Smoke, HC, BE, M116, (DODAC 1320-D548)
*Projectile, 155-mm, Smoke, WP, M110, (DODAC 1320-D550)
Reducer, Flash, Propelling Charge, M2, (DODAC 1320-D552)
Dummy, Projectile, 155-mm, M7, (DODAC 1320-D553)
Projectile, 155-mm, HE, M449A1, (DODAC 1320-D562)
Projectile, 155-mm, HE, M483A1, (DODAC 1320-D563)
Projectile, 155-mm, HE, RA, M549, (DODAC 1320-D579)
Projectile, 155-mm, M864, (DODAC 1320-D864)
Projectile, 155-mm, Smoke, WP, M825, (DODAC 1320-D528)
Fuze, Electronic Time, M762, (DODAC 1320-N289)
Fuze, Electronic Time, M767, (DODAC 1320-N290)
Fuze, Delay, Mod 1, PD, Mk399, (DODAC 1390-N659)

Note: The required fuzes and primers may be rigged as part of the load; however, only those fuzes and primers listed in Table 1-3 are authorized to be airdropped.

*The old and new type propelling charge container may be rigged.

Figure 2-35. Ammunition layout in an A-22 cargo bag for low-velocity airdrop (continued)

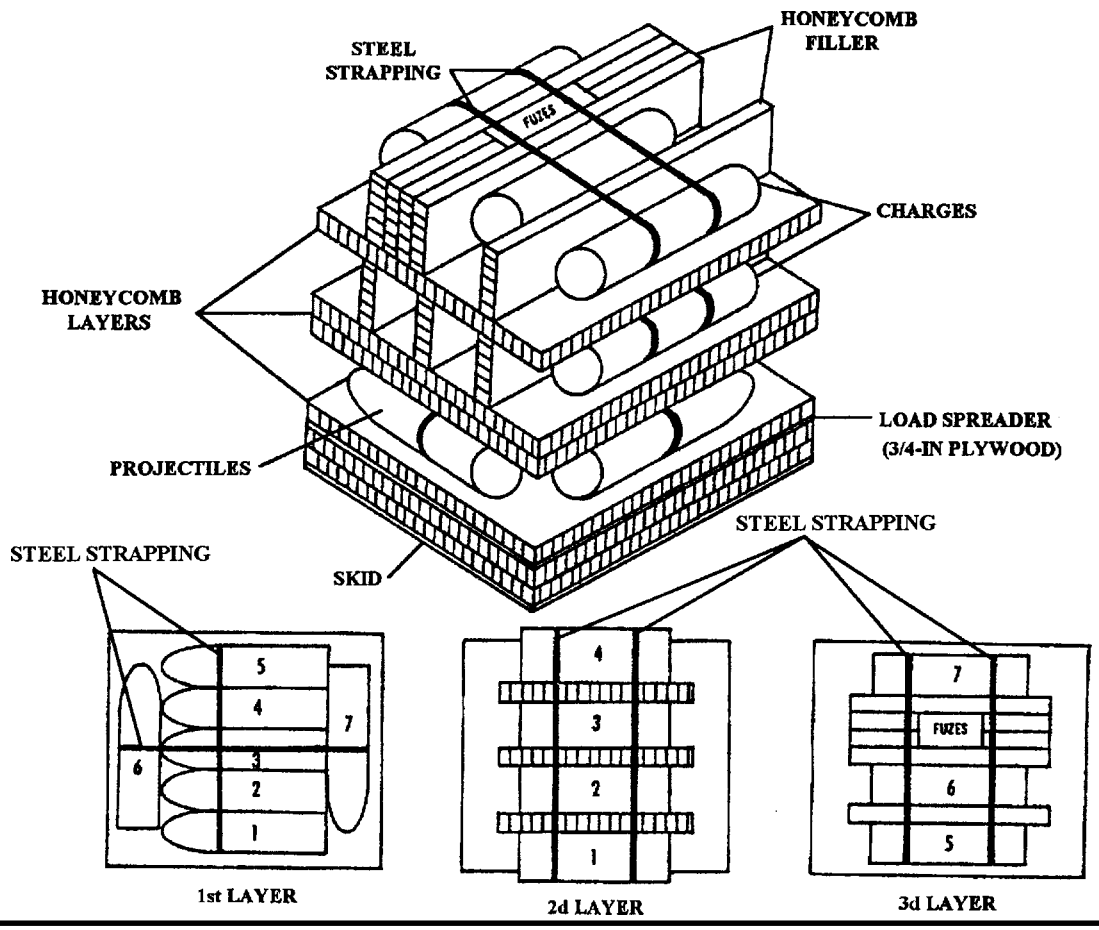

The following ammunition items are rigged in an A-22 cargo bag for low-velocity airdrop as shown in Figure 2-38.

8-Inch Ammunition

*Cartridge, Propelling, 8-in,WB, M188, (DODAC 1320-D661)
Cartridge, Propelling, 8-in,WB, M188A1, (DODAC 1320-D662)
Cartridge, Propelling, 8-in, M1, (DODAC 1320-D675)
Cartridge, Propelling, 8-in, M2, (DODAC 1320-D676)
Projectile, 8-in, HE, M106, (DODAC 1320-D680)
Reducer, Flash, Propelling, Charge, M3, (DODAC 1320-D681)
Projectile, 8-in, HE, M404, (DODAC 1320-D684)
Fuze, Delay, Mod 1, PD, MK399, (DODAC 1390-N659)

Note: The required fuzes are rigged with the load.

*The old and new type propelling charge container may be rigged.

Figure 2-38. Ammunition layout in an A-22 cargo bag for low-velocity airdrop

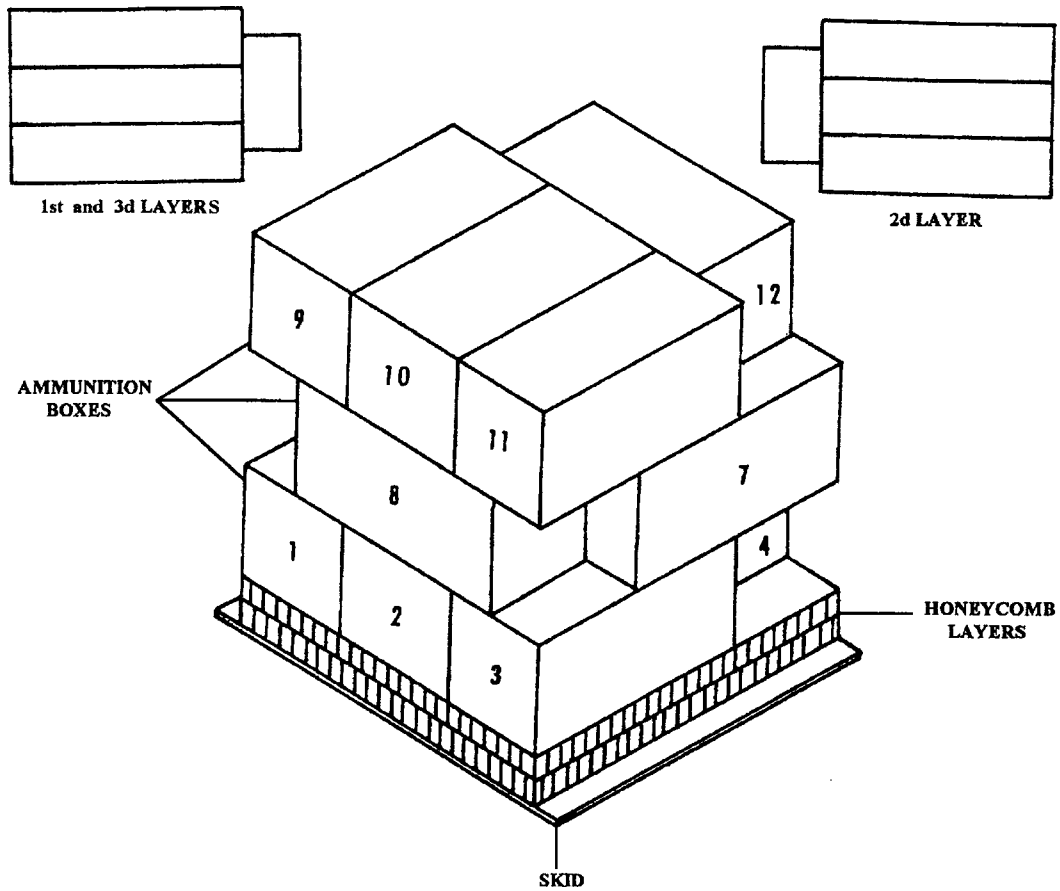

The following ammunition items are rigged in an A-22 cargo bag for low-velocity airdrop as shown in Figure 2-39.

Mine

Mine, AT, HE, M19 (DODAC 1345-K250)

Figure 2-39. Ammunition layout in an A-22 cargo bag for low-velocity airdrop

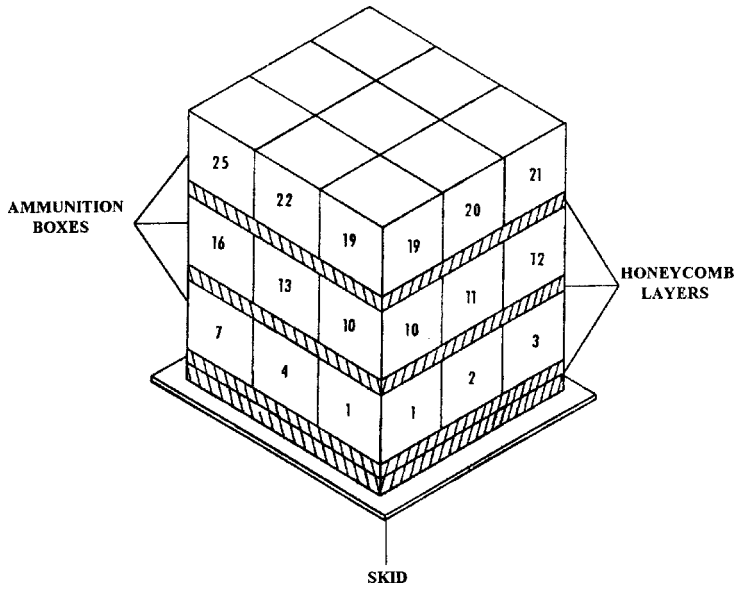

The following ammunition items are rigged in an A-22 cargo bag for low-velocity airdrop as shown in Figure 2-54.

Signal Items

Signal, Illuminating, Ground, M195, Green Star, (DODAC 1370-L305)
Signal, Illuminating, Ground, M158, Red Star, (DODAC 1370-L306)
Signal, Illuminating, Ground, M159, White Star, (DODAC 1370-L307)
Signal, Illuminating, Ground Parachute, M126A1, (DODAC 1370-L311)
Signal, Illuminating, Parachute, M127A1, White Star, (DODAC 1370-L312)
Signal, Illuminating, Ground, Cluster, M125A1, (DODAC 1370-L314)
Signal, Smoke, Parachute, M129A1, Red, (DODAC 1370-L323)
Signal, Smoke, Parachute, M128A1, Green, (DODAC 1370-L324)

Demolition Item

Destructor, Explosive, Universal, M10, (DODAC 1375-M241)

Figure 2-54. Ammunition layout in an A-22 cargo bag for low-velocity airdrop

The following ammunition items are rigged in an A-22 cargo bag for low-velocity airdrop as shown in Figure 2-54.

5.56-Millimeter Ammunition

Cartridge, 5.56-mm, Ball, M855 and Tracer, M856 Linked, (DODAC 1305-A064)

25.4-Millimeter Ammunition

Cartridge, 25.4-mm,Decoy, M839, (DODAC 1305-A965)

60-Millimeter Ammunition

Note: When rigging 60-mm ammunition, reduce the number of layers of ammunition boxes from three to two.

Cartridge, 60-mm, HE, M720, (DODAC 1310-B642)
Cartridge, 60-mm, HE, M720E1 with M734A1 Fuze, (DODAC 1310-B642)
Cartridge, 60-mm, Smoke, WP, M722, (DODAC 1310-B646)
Cartridge, 60-mm, Illuminating, M721, (DODAC 1310-B647)
Cartridge, 60-mm, Illuminating, Infrared, M767, (DODAC 1310-BA04)

Incendiary Items

Smoke Pot, Floating, HC, M4A2, (DODAC 1365-K867)

Figure 2-54. Ammunition layout in an A-22 cargo bag for low-velocity airdrop (continued)

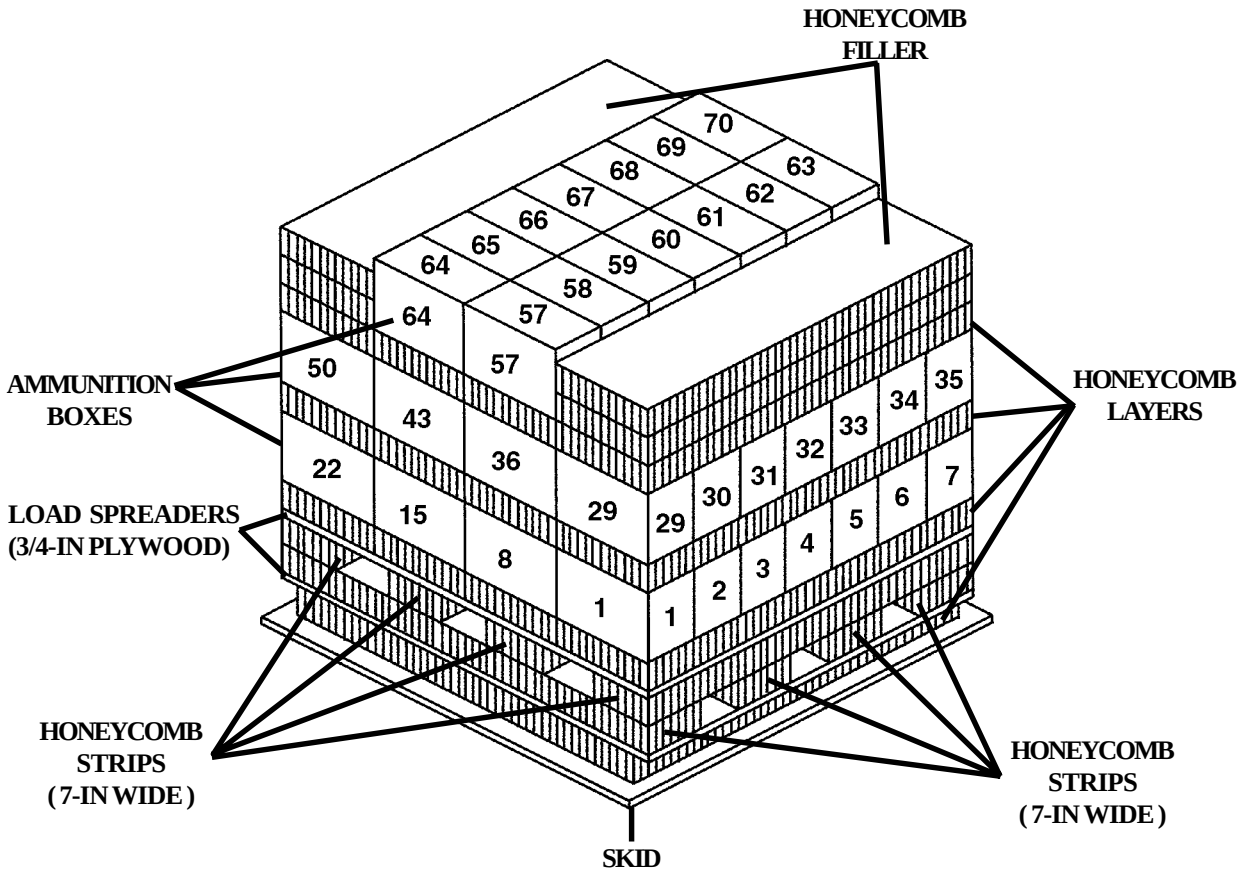

The following ammunition item is rigged in an A-22 cargo bag for low-velocity airdrop as shown in Figure 2-61.1.

Fuzes

Fuze, Delay, Mod 1, PD, MK399 (DODAC 1390-N659)

Figure 2-61.1. Ammunition layout in an A-22 cargo bag for low-velocity airdrop

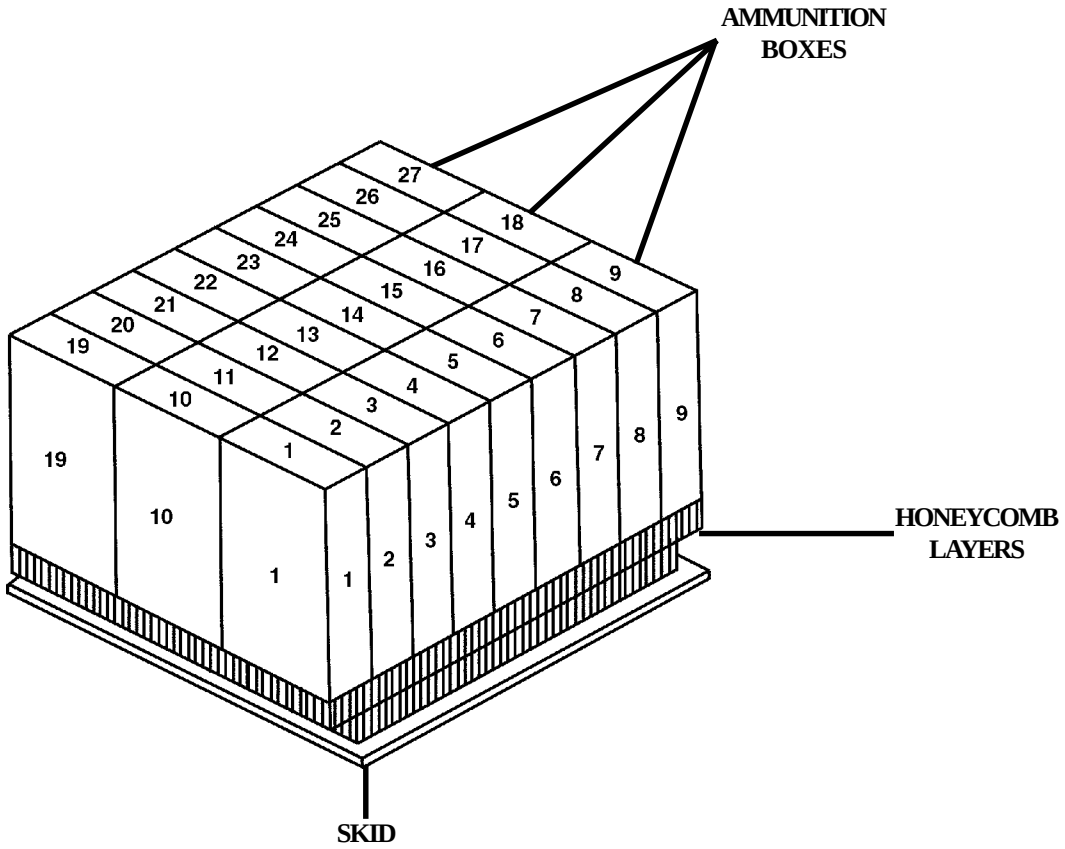

The following ammunition items are rigged in an A-22 cargo bag for low-velocity airdrop as shown in Figure 2-61.2.

81-Millimeter Ammunition

Cartridge, 81-mm, HE, M821A1/M821A2, (DODAC 1315-C868)
Cartridge, 81-mm, HE, M889A1 (DODAC 1315-C869)

Figure 2-61.2. Ammunition layout in an A-22 cargo bag for low-velocity airdrop

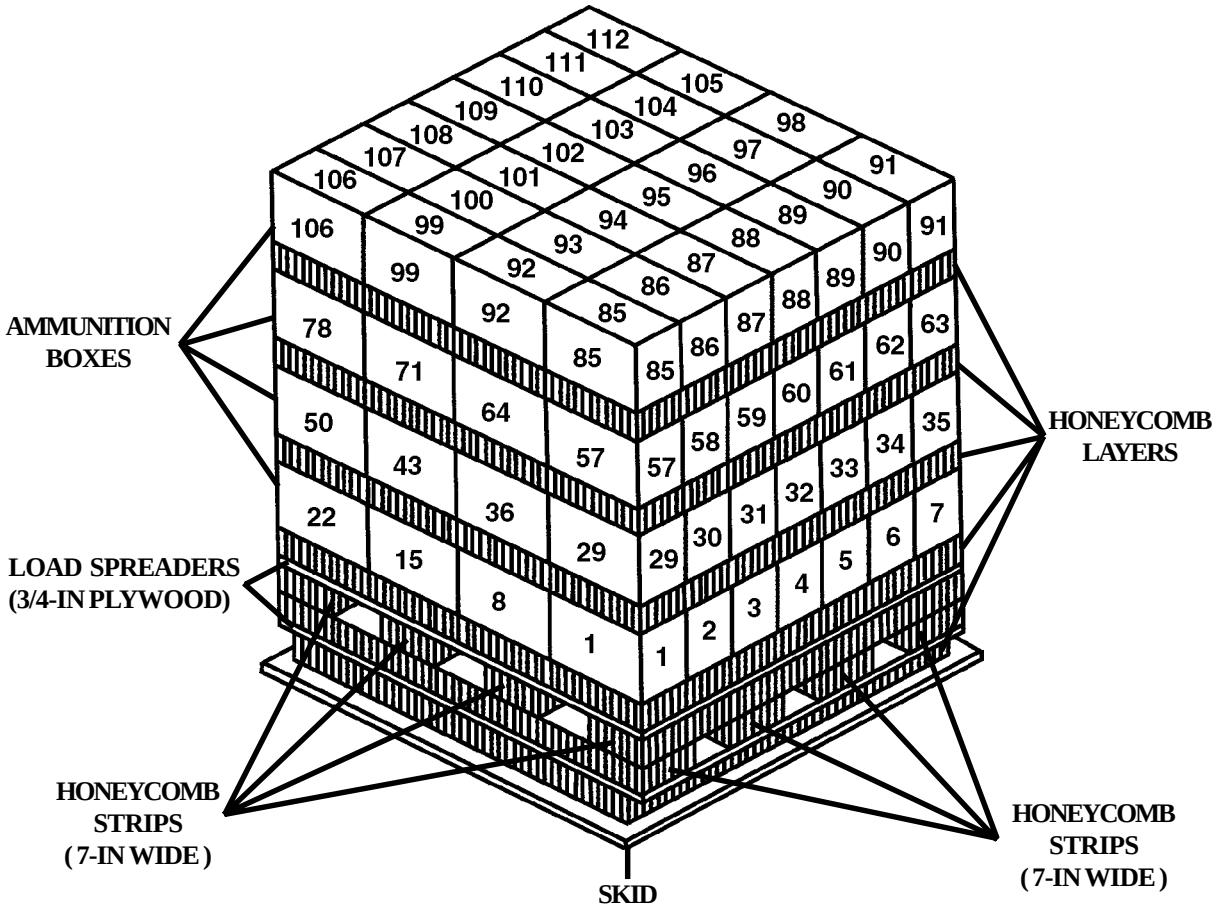

The following ammunition item is rigged in an A-22 cargo bag for low-velocity airdrop as shown in Figure 2-61.3.

Grenades

Launcher, Grenade, Smoke, Screening, TA, M90, (DODAC 1330-GG03)

Figure 2-61.3. Ammunition layout in an A-22 cargo bag for low-velocity airdrop

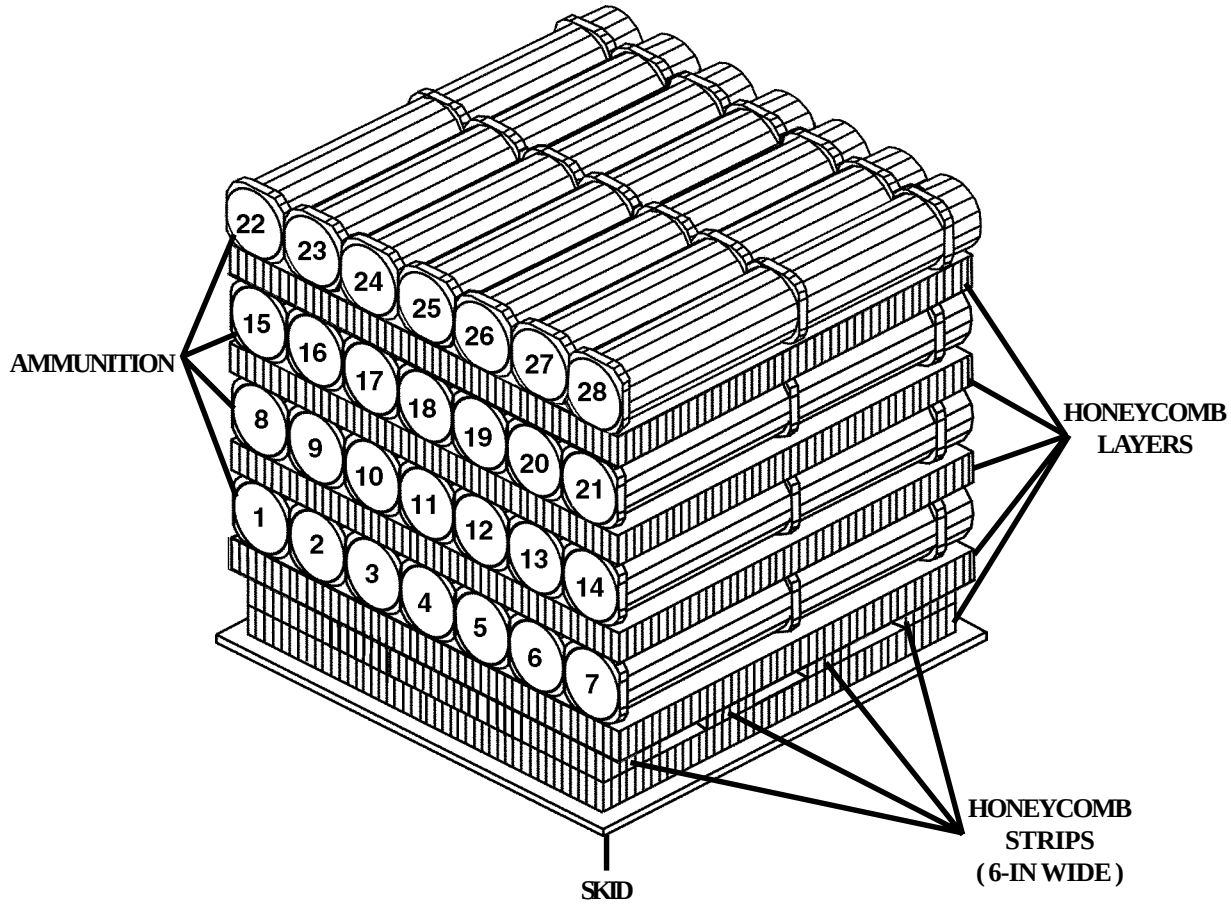

The following ammunition item is rigged in an A-22 cargo bag for low-velocity airdrop as shown in Figure 2-61.4.

105-Millimeter Ammunition

Cartridge, 105-mm, HERA, M913 in PA117 Containers, (DODAC 1315-C546)

Figure 2-61.4. Ammunition layout in an A-22 cargo bag for low-velocity airdrop

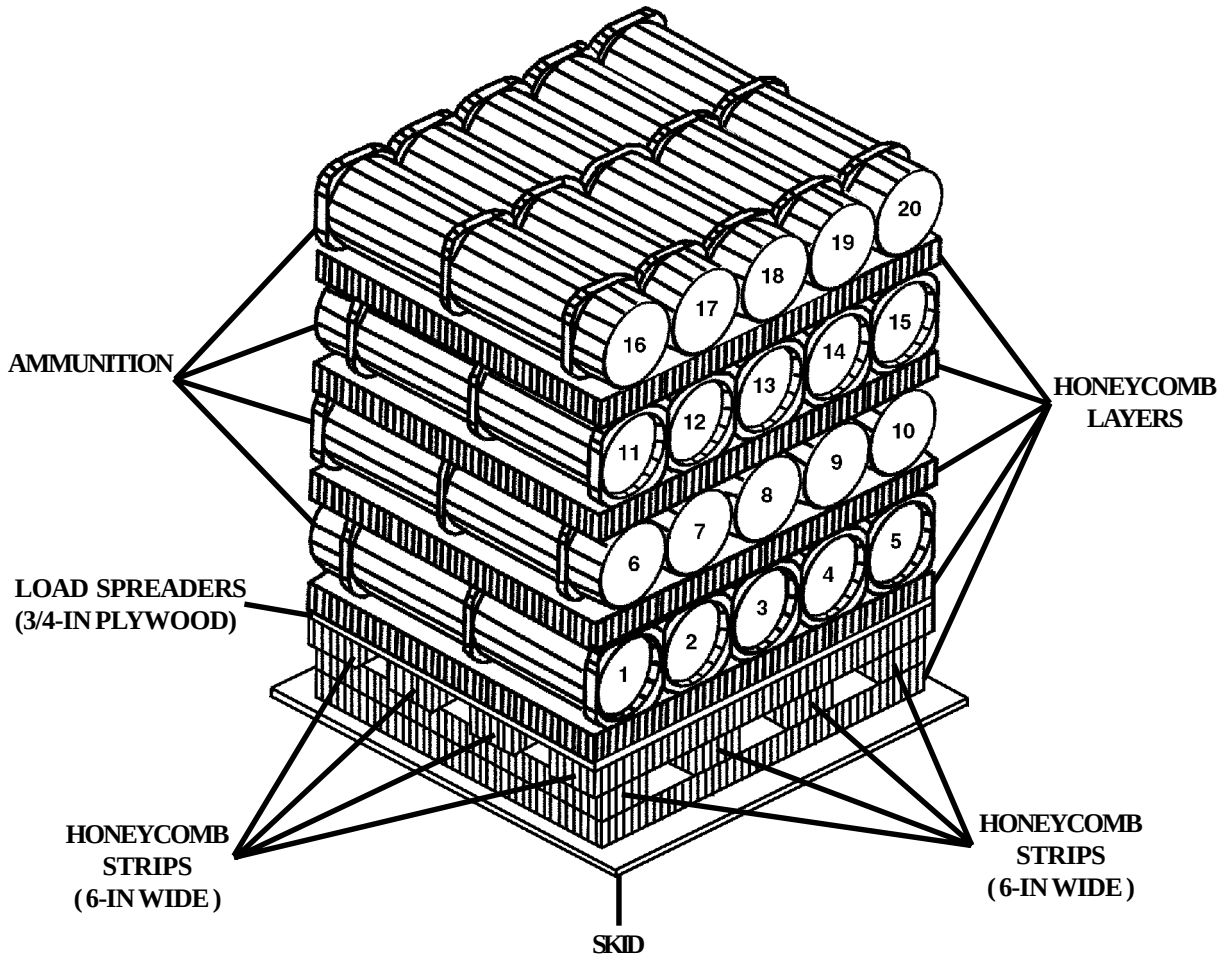

The following ammunition item is rigged in an A-22 cargo bag for low-velocity airdrop as shown in Figure 2-61.5.

Rockets

Rocket, 83-mm, HEDP, BDM, (DODAC 1340-HA08)

Figure 2-61.5. Ammunition layout in an A-22 cargo bag for low-velocity airdrop

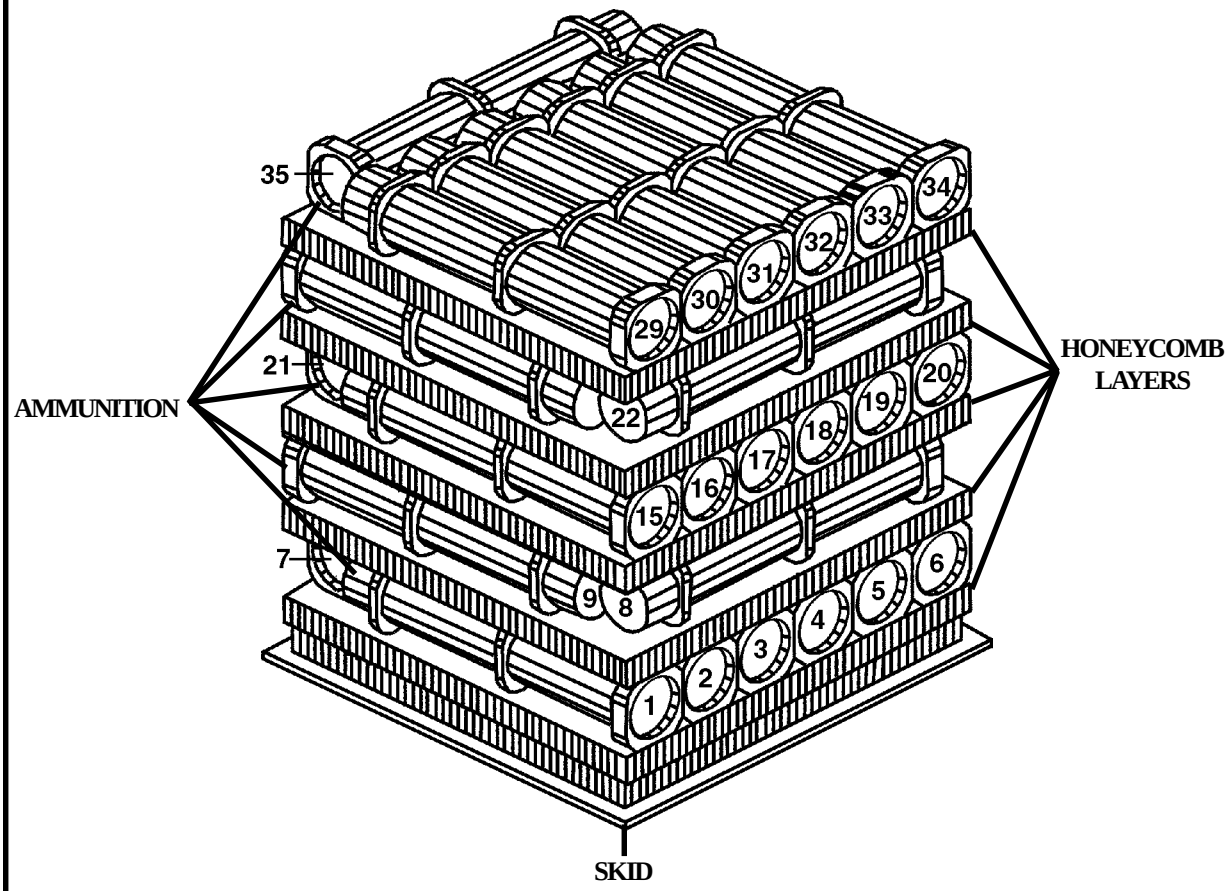

The following ammunition item is rigged in an A-22 cargo bag for low-velocity airdrop as shown in Figure 2-61.6.

Demolition Items

Demolition Kit, Fighting Position Excavator, M300, (DODAC 1375-MN26)

Figure 2-61.6. Ammunition layout in an A-22 cargo bag for low-velocity airdrop

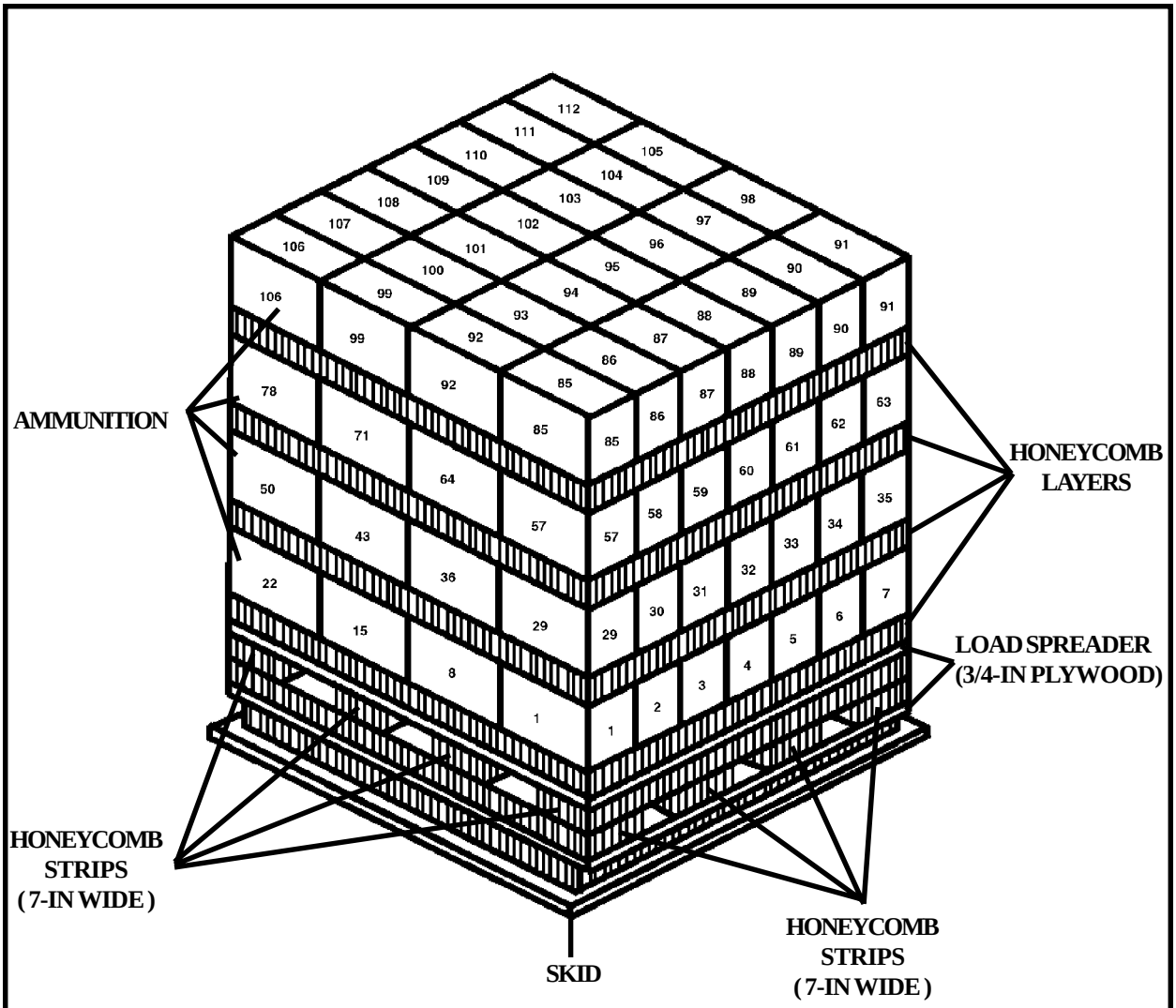

The following ammunition item is rigged in an A-22 cargo bag for low-velocity airdrop as shown in Figure 2-61.7.

Grenades

Grenade, Discharger, Anti-Riot, Irritant, XL96E1, (DODAC 1330-FZ14)
Grenade, Discharger, Anti-Riot, Irritant, XL97E1, (DODAC 1330-FZ15)

Figure 2-61.7. Ammunition layout in an A-22 cargo bag for low-velocity airdrop

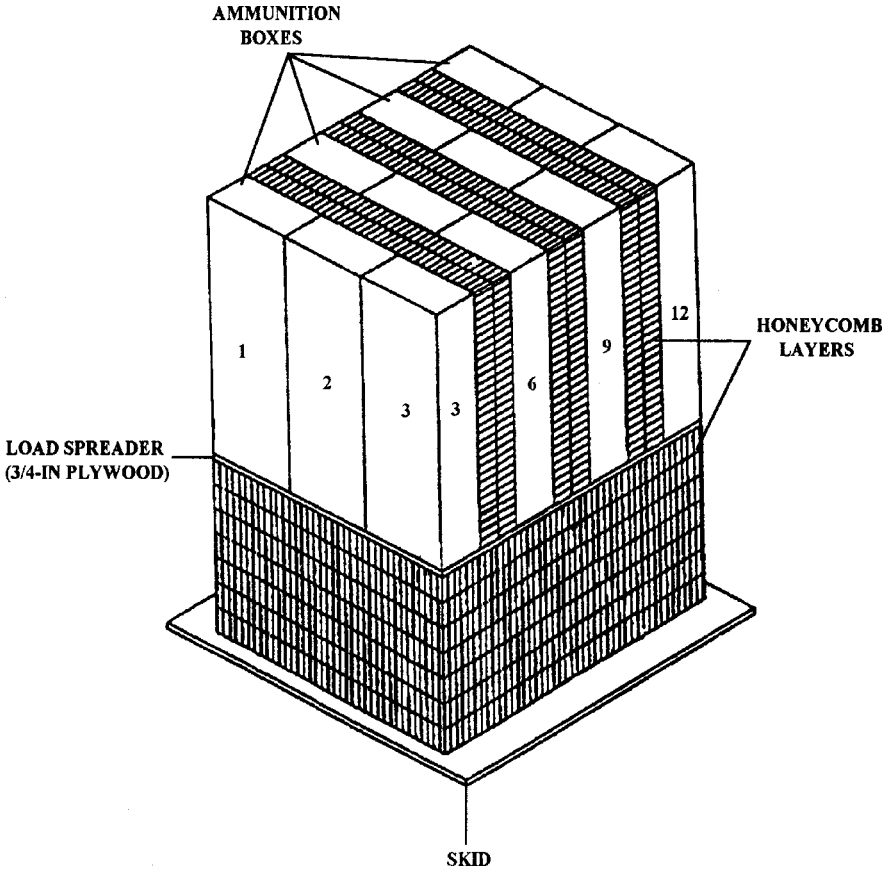

The following ammunition items are rigged in an A-22 cargo bag for high-velocity airdrop as shown in Figure 2-93.

120-Millimeter Ammunition

Cartridge, 120-mm, HE, M934 with or w/o Fuze M734A1 (DODAC 1315-C379)
Cartridge, 120-mm, HE, M933 with or w/o Fuze M734A1 (DODAC 1315-C623)
Cartridge, 120-mm, M929, Smoke, WP, w/ Fuze M74 or Fuze M734A1(DODAC 1315-C624)

Figure 2-93. Ammunition layout in an A-22 cargo bag for high-velocity airdrop

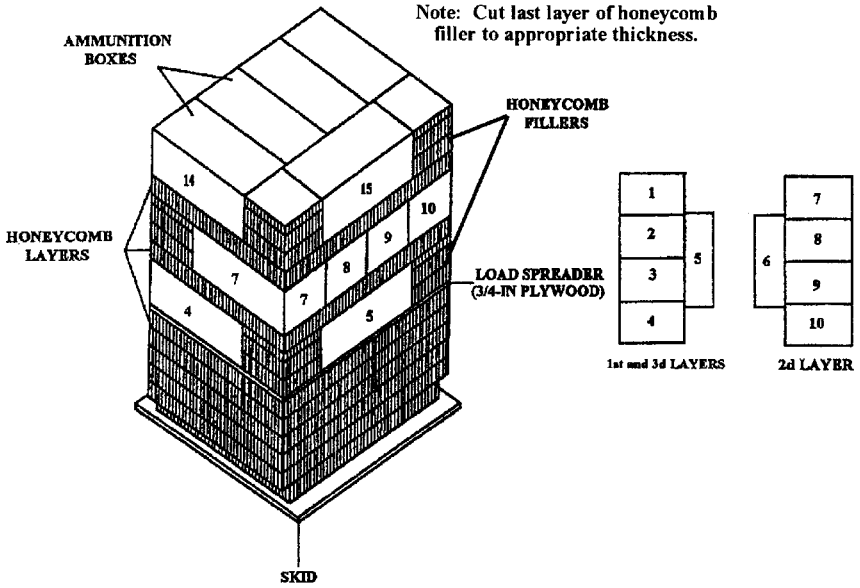

The following ammunition item is rigged in an A-22 cargo bag for high-velocity airdrop as shown in Figure 2-94.

4.2-Inch Ammunition

Cartridge, 4.2-in, HE, w/o Fuze, (DODAC1315-C697)

Figure 2-94. Ammunition layout in an A-22 cargo bag for high-velocity airdrop

The following ammunition items are rigged in an A-22 cargo bag for high-velocity airdrop as shown in Figure 2-100.

155-Millimeter Ammunition

Cartridge, Propelling, 155-mm, M19, (DODAC 1320-D480)
Projectile, 155-mm, Gas, Persistent, HD, M104, (DODAC 1320-D484)
Projectile, 155-mm, HE, M101, (DODAC 1320-D485)
Projectile, 155-mm, Smoke, WP, M104, (DODAC 1320-D487)
Reducer, Flash, Propelling Charge, M1, (DODAC 1320-D490)
Projectile, 155-mm, HE, ADAM, M692, (DODAC 1320-D501)
Projectile, 155-mm, HE, ADAM, M731, (DODAC 1320-D502)
Projectile, 155-mm, AT, RAAMS, M718, (DODAC 1320-D503)
Projectile, 155-mm, Illuminating, M485A2, (DODAC 1320-D505)
Projectile, 155-mm, HC, HE, M116E2, (DODAC 1320-D506)
Projectile, 155-mm, AT, RAAMS, M741, (DODAC 1320-D509)
Projectile, 155-mm, HE, RAAM-L, M718A1, (DODAC 1320-D515)
Projectile, 155-mm, Smoke, WP, M825, (DODAC 1320-D528)
Projectile, 155-mm, M795, (DODAC 1320-D529)
*Charge, Propelling, 155-mm, M203A1, (DODAC 1320-D532)
*Charge, Propelling, 155-mm, M119A1 and M119A2, (DODAC 1320-D533)
*Charge, Propelling, 155-mm, M3 and M3A1, (DODAC 1320-D540)
*Charge, Propelling, 155-mm, M4A1 and M4A2, (DODAC1320-D541)
Projectile, 155-mm, HE, M107, (DODAC 1320-D544)
Projectile, 155-mm, Smoke, HC, BE, M116, (DODAC 1320-D548)
*Projectile, 155-mm, Smoke, WP, M110, (DODAC 1320-D550)
Reducer, Flash, Propelling Charge, M2, (DODAC 1320-D552)
Dummy, Projectile, 155-mm, M7, (DODAC 1320-D553)
Projectile, 155-mm, HE, M449A1, (DODAC 1320-D562)
Projectile, 155-mm, HE, M483A1, (DODAC 1320-D563)
Projectile, 155-mm, HE, RA, M549, (DODAC 1320-D579)
Projectile, 155-mm, M864, (DODAC 1320-D864)
Fuze, Electronic Time, M762, (DODAC 1320-N289)
Fuze, Electronic Time, M767, (DODAC 1320-N290)
Fuze, Delay, Mod 1, PD, Mk399, (DODAC 1390-N659)

Note: The required fuzes and primers may be rigged as part of the load; however, only those fuzes and primers listed in Table 1-3 are authorized to be airdropped.

*The old and new type propelling charge container may be rigged.

Figure 2-100. Ammunition layout in an A-22 cargo bag for high-velocity airdrop (continued)

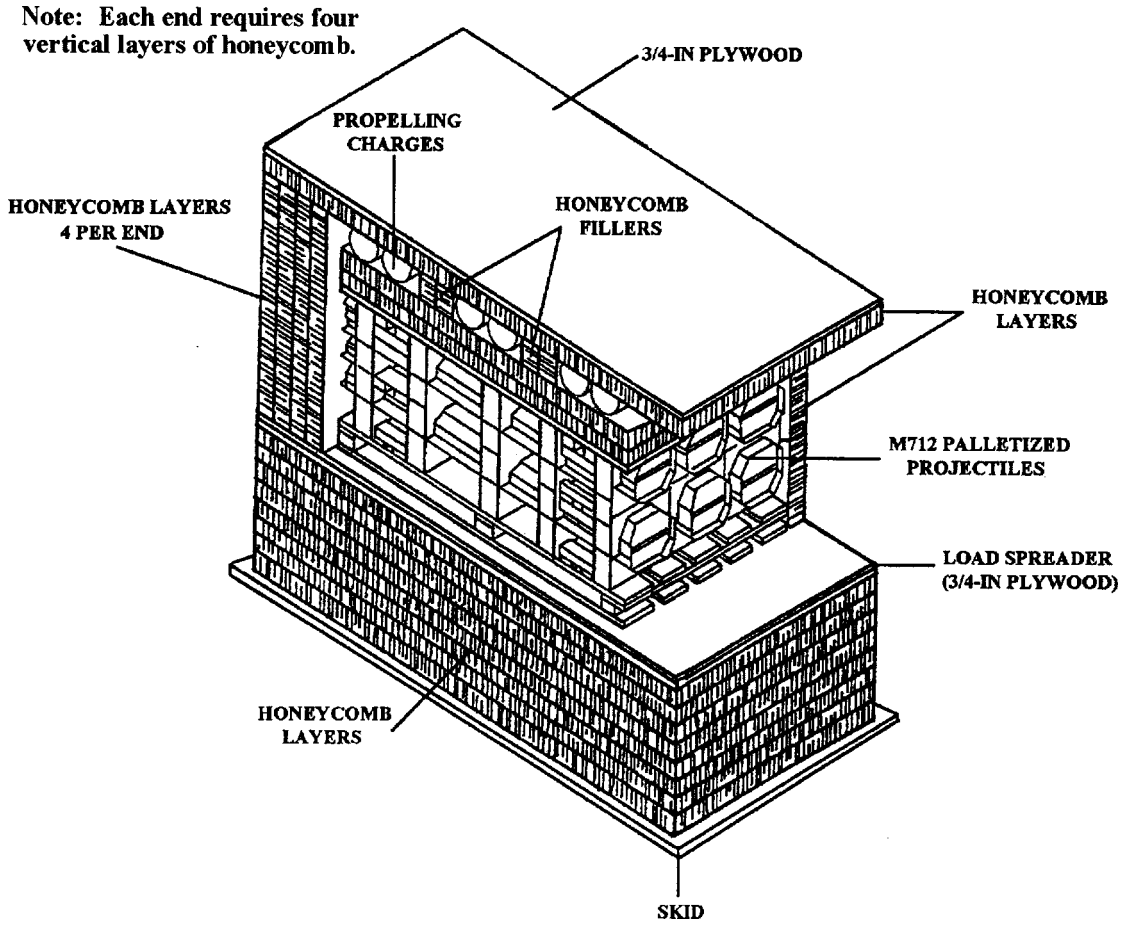

The following ammunition item is rigged in a* DOUBLE A-22 CARGO BAG *for high-velocity airdrop as shown in Figure 2-101. Prepare a double A-22 skid according to FM 10-500-2/TO 13C7-1-11/FMFM 7-47.

155-Millimeter Ammunition

Projectile, 155-mm, HEAT,M712 (Copperhead), (DODAC 1320-D510)

Figure 2-101. Ammunition layout in a* DOUBLE A-22 CARGO BAG *for high-velocity airdrop

The following ammunition items are rigged in an A-22 cargo bag for high-velocity airdrop as shown in Figure 2-103.

8-Inch Ammunition

*Cartridge, Propelling, 8-in, M188, (DODAC 1320-D661)
Cartridge, Propelling, 8-in, M188A1, (DODAC 1320-D662)
Cartridge, Propelling, 8-in, M1, (DODAC 1320-D675)
Cartridge, Propelling, 8-in, M2, (DODAC 1320-D676)
Projectile, 8-in, HE, M106 (DODAC 1320-D680)
Reducer, Flash, Propelling Charge, M3, (DODAC 1320-D681)
Projectile, 8-in, HE, M106, (DODAC 1320-D684)
Fuze, Delay, MOD 1, PD, Mk399, (DODAC 1320-D661)

Note: Required fuzes are rigged with the load.

*The old or new type propelling charge containers may be rigged.

Figure 2-103. Ammunition layout in an A-22 cargo bag for high-velocity airdrop (continued)

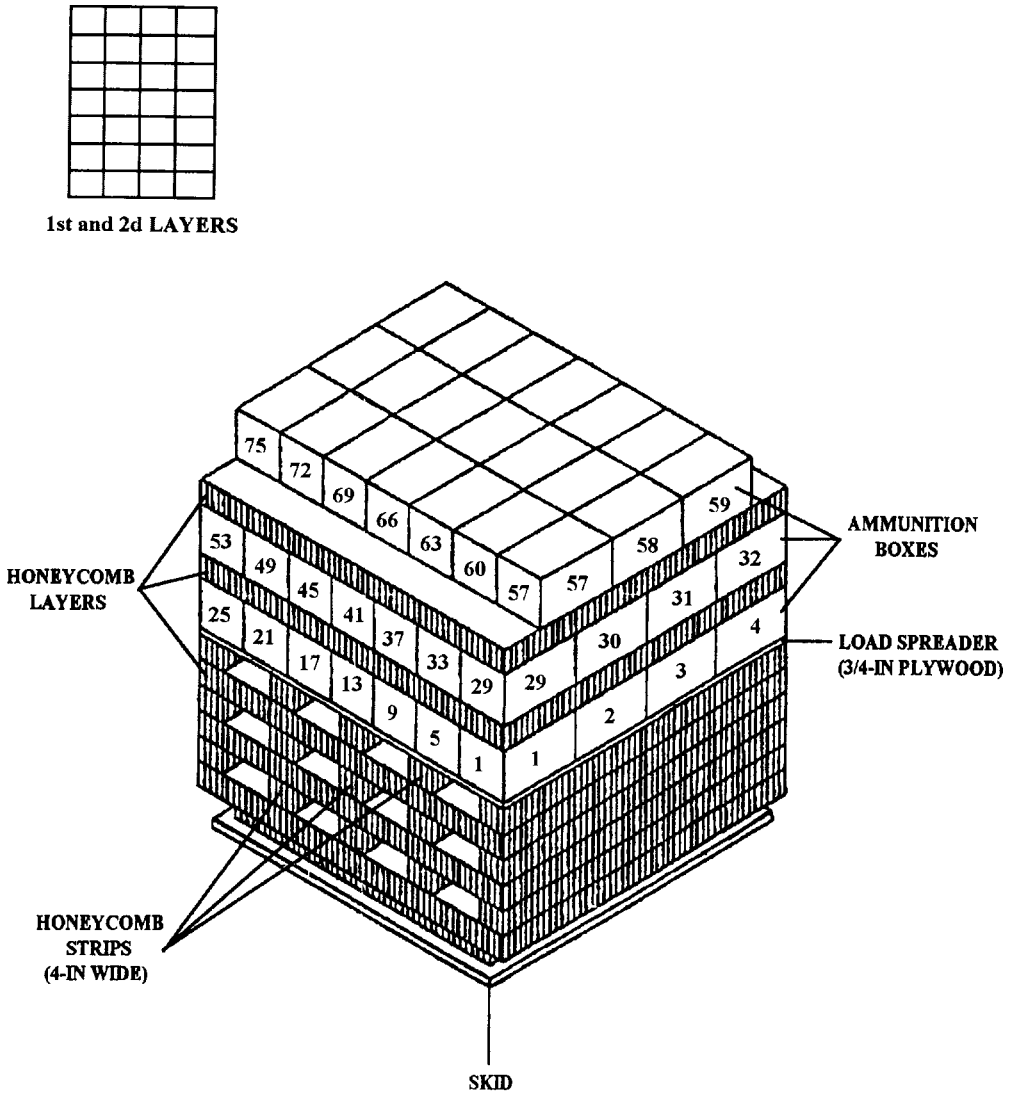

The following ammunition item is rigged in an A-22 cargo bag for high-velocity airdrop as shown in Figure 2-104.

Grenades

Grenade, 40-mm, Smoke, Screening, L8A3, (DODAC 1340-G815)

Figure 2-104. Ammunition layout in an A-22 cargo bag for high-velocity airdrop

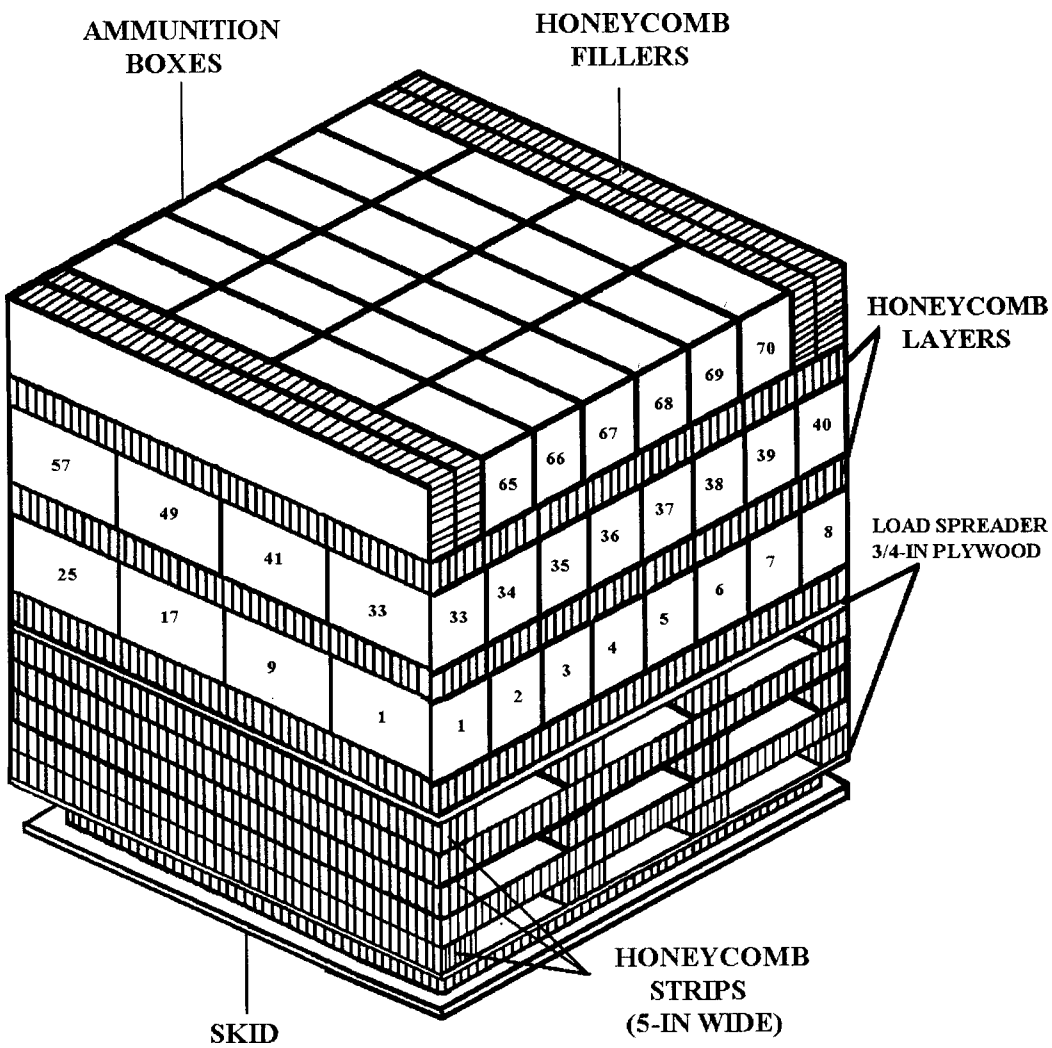

The following ammunition item is rigged in an A-22 cargo bag for high-velocity airdrop as shown in Figure 2-107

Grenades

Grenade, Launcher, Smoke, MM/IR, Screening, XM81, (DODAC 1330-GG01)

Figure 2-107. Ammunition layout in an A-22 cargo bag for high-velocity airdrop

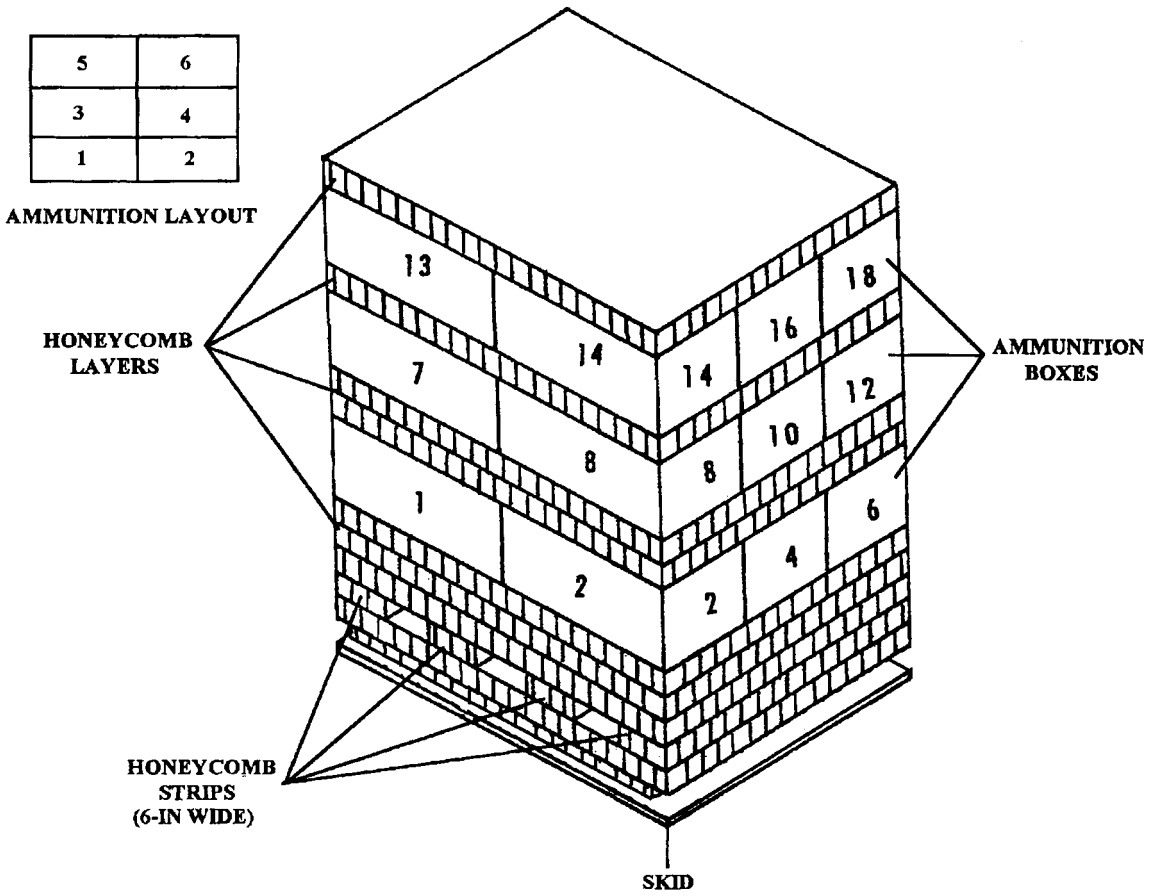

The following ammunition item is rigged in an A-22 cargo bag for high-velocity airdrop as shown in Figure 2-108.

Grenades

Launcher and Grenade, Smoke, HC,WP, M176, (DODAC 1330-HO50)

Mines

CAUTION
The M14 mine will contaminate the drop zone if the parachute malfunctions.

Mine, Antipersonnel, MN, M14, (DODAC 1345-K121)
Mine, Antitank, HEAT, Heavy, M15 with fuze M603, (DODAC 1345-K180)

Signal Items

Flare, Surface, M49A1, Trip, (DODAC 1370-L495)
Cap, Blasting, Special,Non-Electric, M7, (DODAC 1375-M131)
Detonator, Percussion, M1A2, 15-sec Delay, (DODAC 1375-M450)

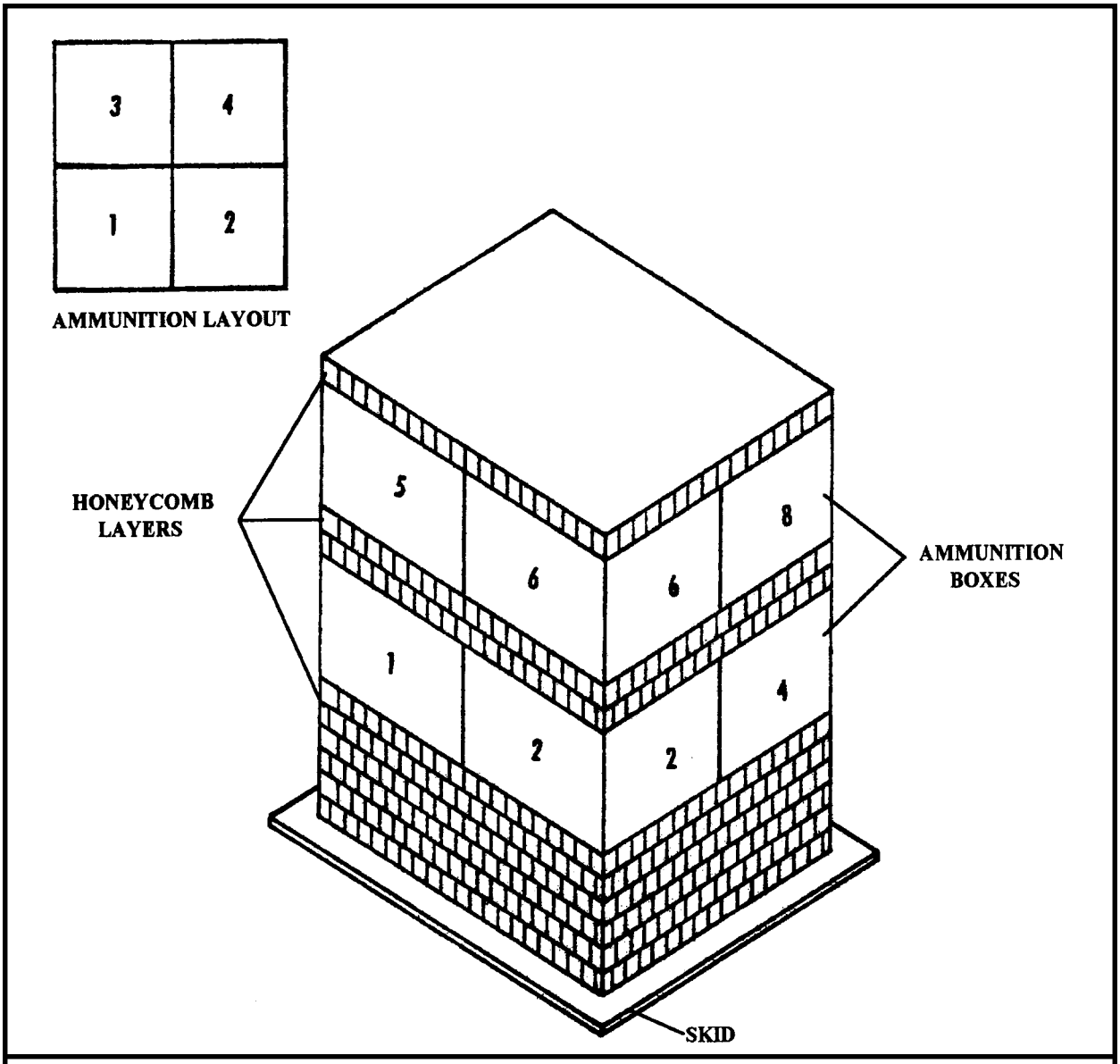

The following ammunition item is rigged in an A-22 cargo bag for high-velocity airdrop as shown in Figure 2-124.

Demolition Items

Charge, Demolition, Roll Type, XM-186, (DODAC 1375-M060)
Cap, Blasting, Special, Electric, M6, (DODAC 1375-M130)

Figure 2-124. Ammunition layout in an A-22 cargo bag for high-velocity airdrop

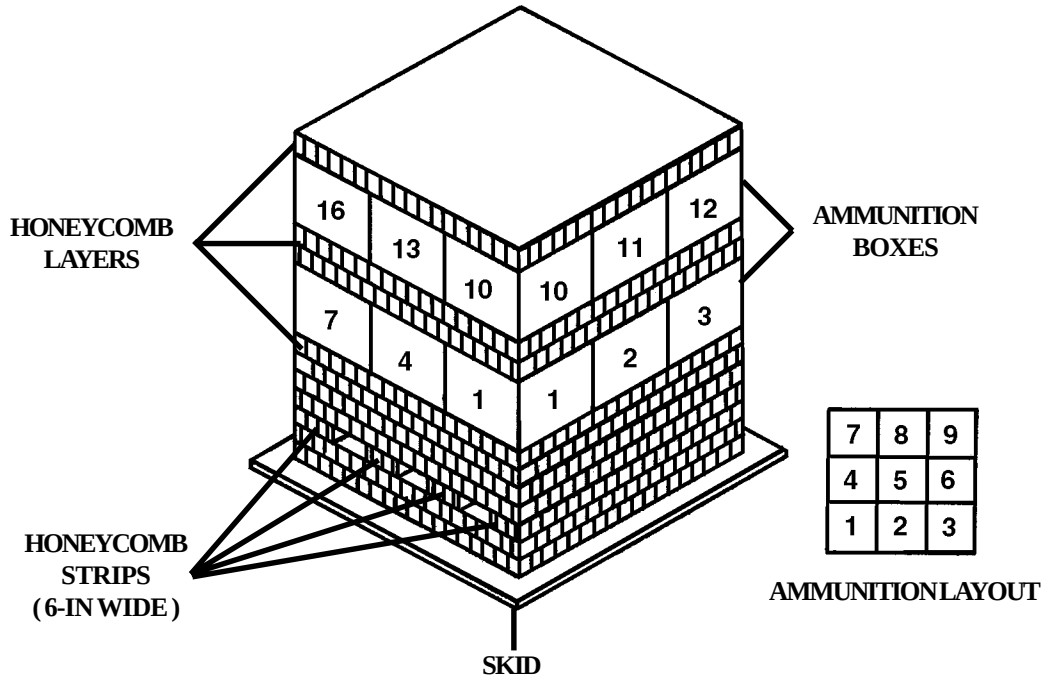

The following ammunition item is rigged in an A-22 cargo bag for high-velocity airdrop as shown in Figure 2-125.

60-Millimeter Ammunition

Cartridge, 60-mm, HE, M720, (DODAC 1310-B642)
Cartridge, 60-mm, Smoke, WP, M722, (DODAC 1310-B646)
Cartridge, 60-mm, Illuminating,M721, (DODAC 1310-B647)
Cartridge, 60-mm, Infrared, Illuminating, M767, (DODAC 1310-BA04)

Signal Items

Signal, Illuminating, Ground, M195, Green Star, (DODAC 1370-L305)
Signal, Illuminating, Ground, M158, Red Star, (DODAC 1370-L306)
Signal, Illuminating, Ground, M159, White Star, (DODAC 1370-L307)
Signal, Illuminating, Ground Parachute, M126A1, (DODAC 1370-L311)
Signal, Illuminating, Ground Parachute, M127A1, White Star, (DODAC 1370-L312)
Signal, Illuminating, Ground, Cluster, M125A1, (DODAC 1370-L314)
Signal, Smoke, Parachute, M129A1, Red, (DODAC 1370-L323)
Signal, Smoke, Parachute, M128A1, Green, (DODAC 1370-L324)

Demolition Item

Destructor, Explosive, Universal, M10, (DODAC 1375-M241)

Figure 2-125. Ammunition layout in an A-22 cargo bag for high-velocity airdrop

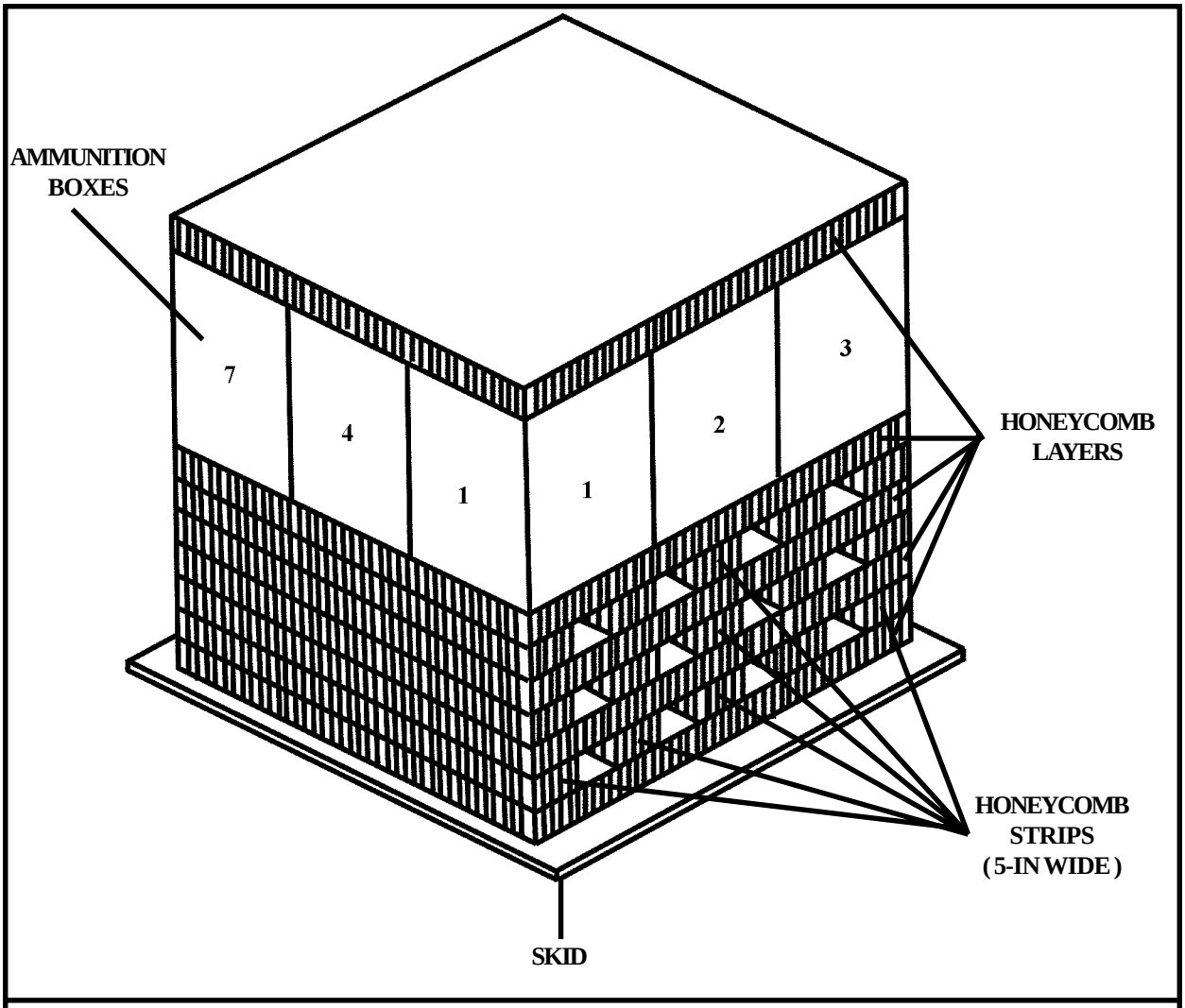

The following ammunition items are rigged in an A-22 cargo bag for high-velocity airdrop as shown in Figure 2-125.1

60-Millimeter Ammunition

Cartridge, 60-mm, HE, M720E1 with M734A1 Fuze, (DODAC 1310-B642)

Figure 2-125.1. Ammunition layout in an A-22 cargo bag for high-velocity airdrop

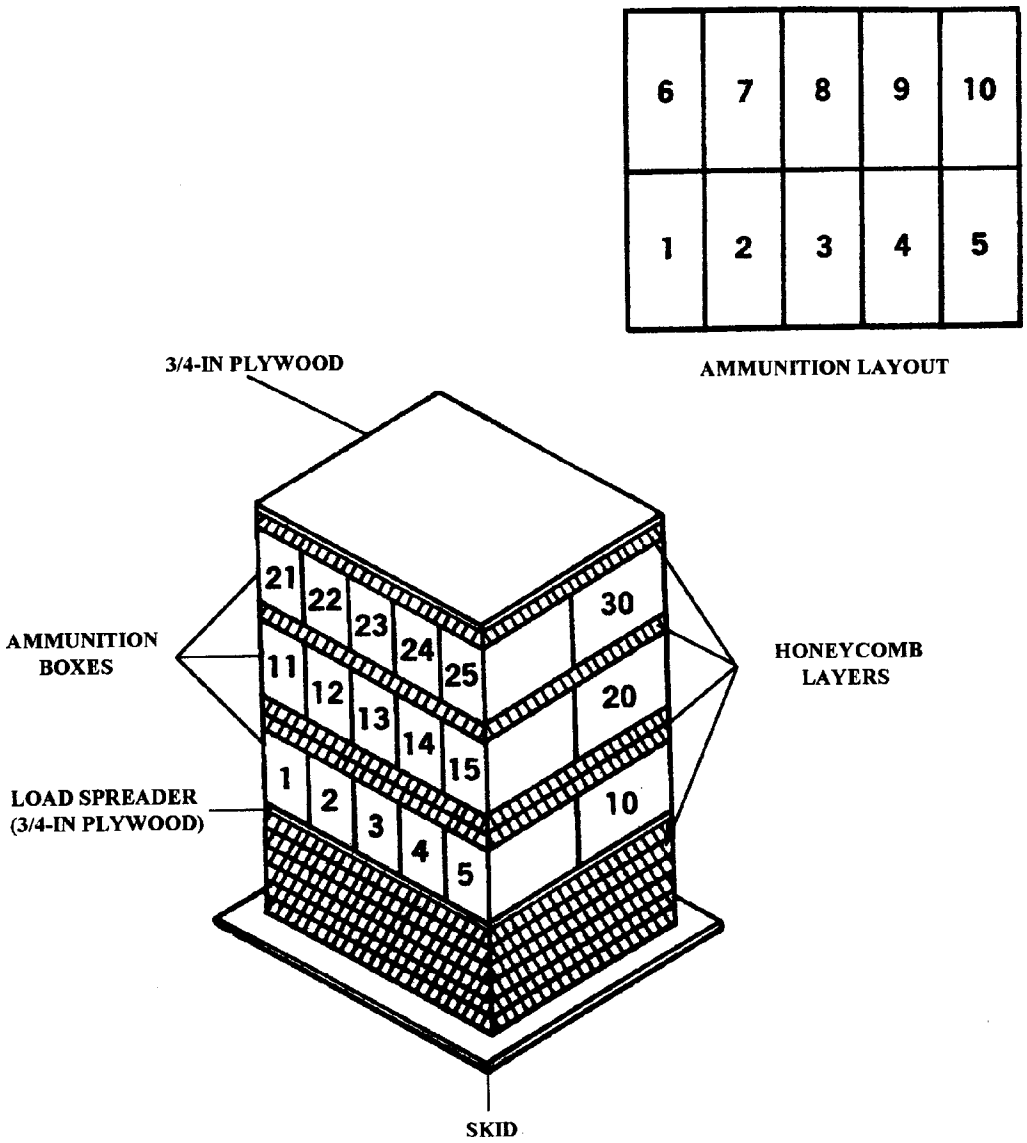

The following ammunition items are rigged in an A-22 cargo bag for high-velocity airdrop as shown in Figure 2-133.

Signal Items

Signal Underwater Sound, MK61, Mod O, (NALC SW08)
Signal Underwater Sound, MK82, Mod O, (NALC SW32)

Figure 2-133. Ammunition layout in an A-22 cargo bag for high-velocity airdrop

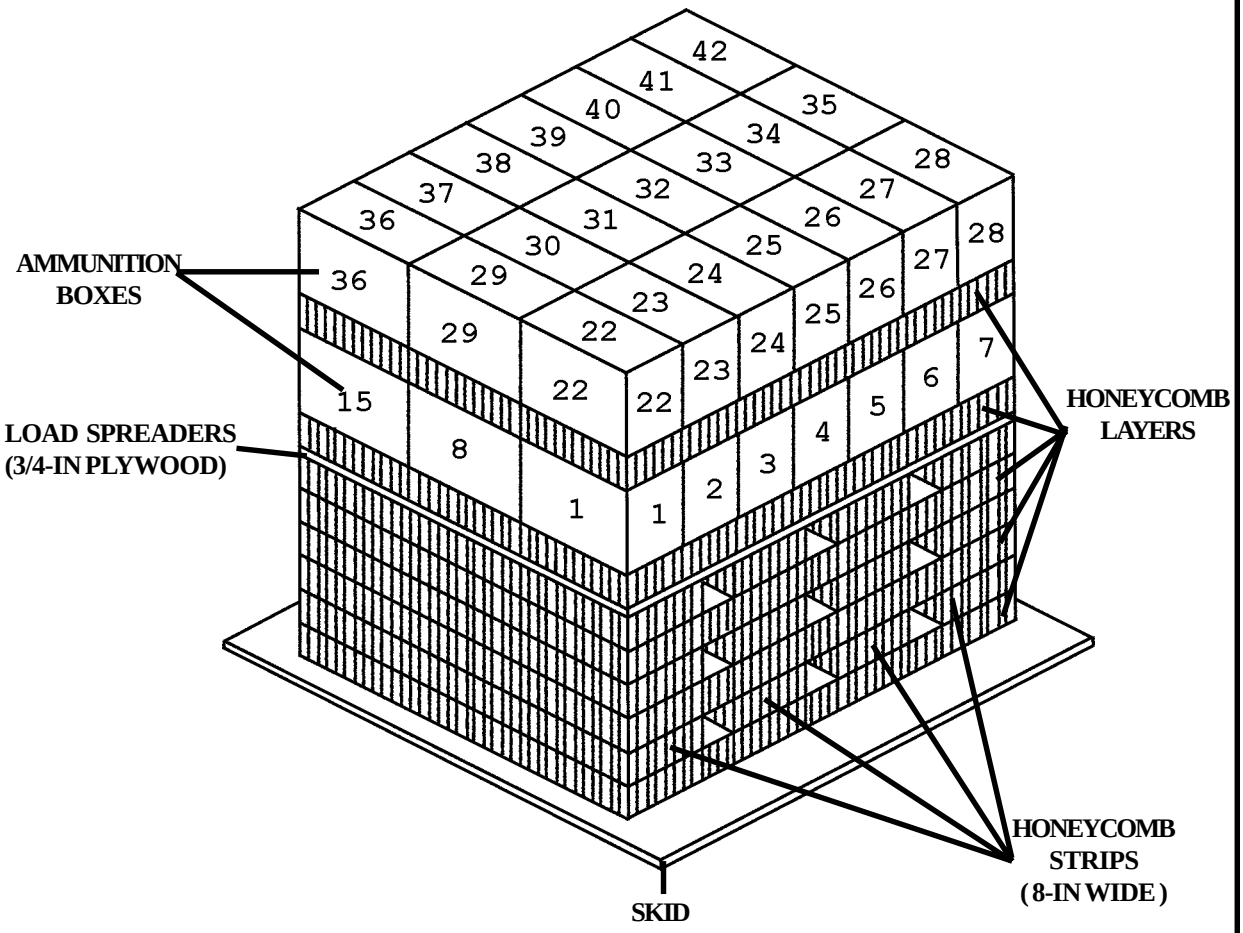

The following ammunition item is rigged in an A-22 cargo bag for high-velocity airdrop as shown in Figure 2-134.

Fuzes and Primers

Fuze, Delay, PD, MOD 1, MK399, (DODAC 1390-N659)

Figure 2-134. Ammunition layout in an A-22 cargo bag for high-velocity airdrop

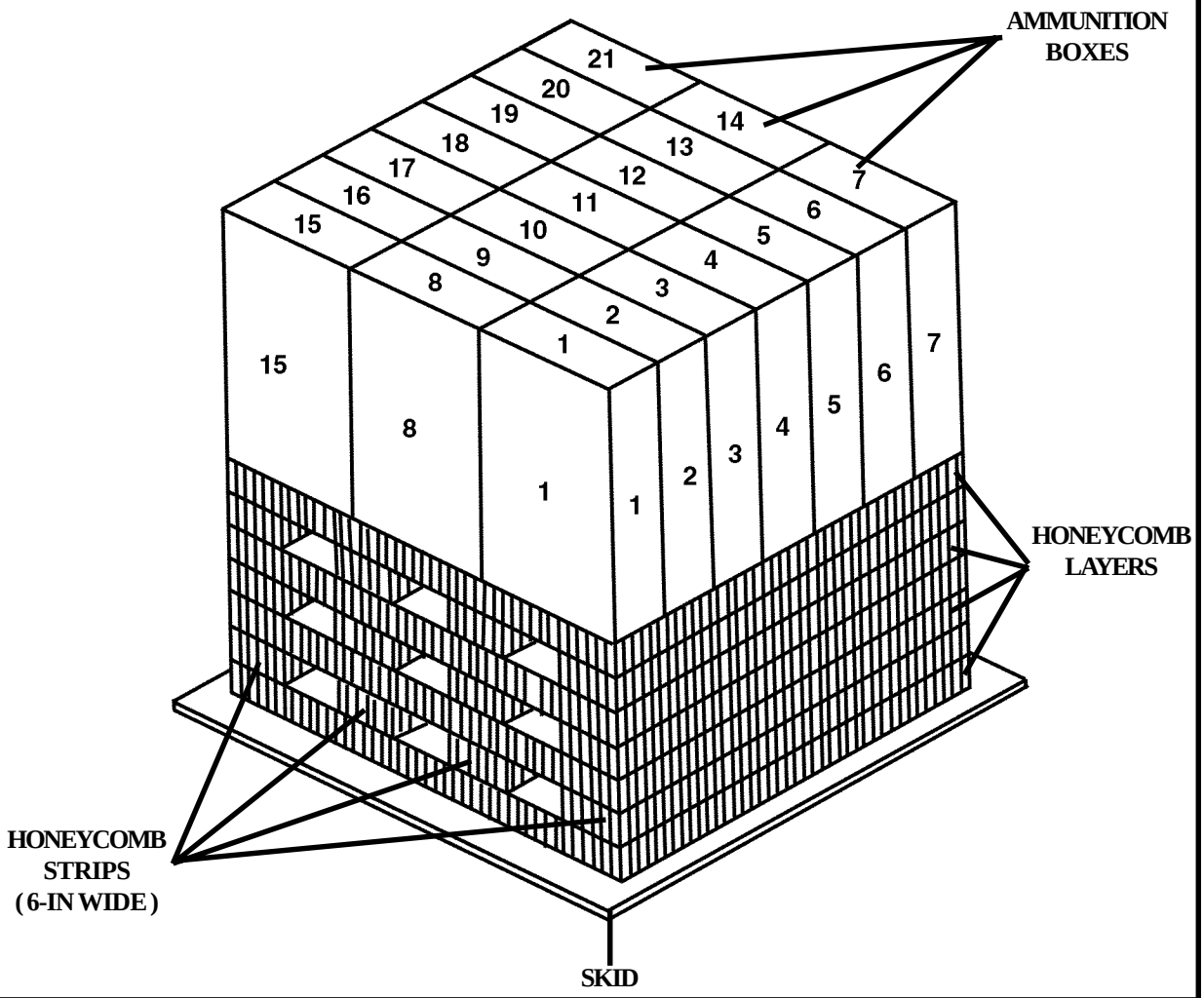

The following ammunition item is rigged in an A-22 cargo bag for high-velocity airdrop as shown in Figure 2-135.

81-Millimeter Ammunition

Cartridge, 81-mm, HE, M821A1/M821A2 with Fuze, M734A1, (DODAC 1315-C868)
Cartridge, 81-mm, HE, M889A1, (DODAC 1315-C869)

Figure 2-135. Ammunition layout in an A-22 cargo bag for high-velocity airdrop

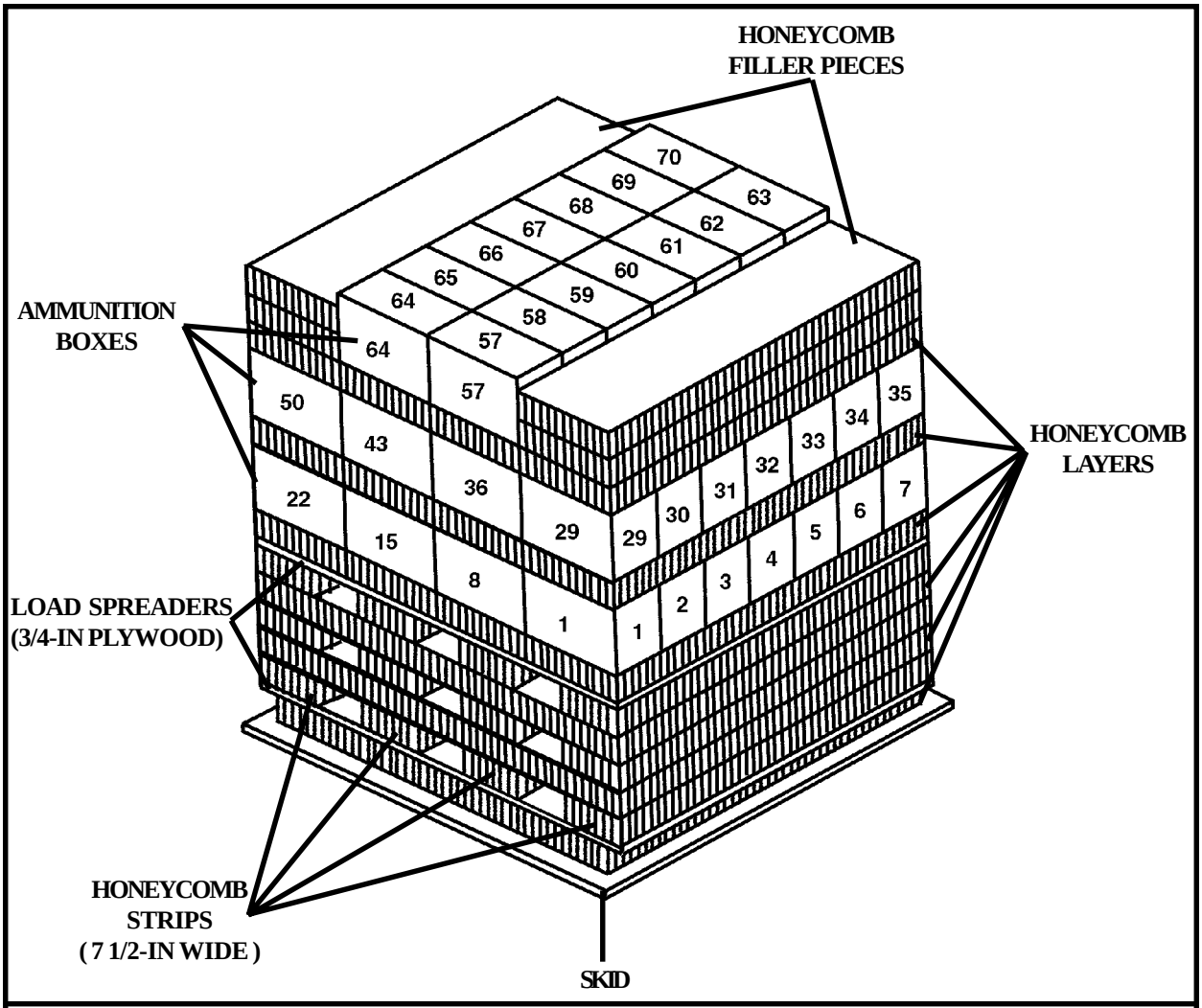

The following ammunition item is rigged in an A-22 cargo bag for high-velocity airdrop as shown in Figure 2-136.

Grenades

Launcher and Grenade, Smoke, Screening, TA, M90, (DODAC 1330-GG03)

Figure 2-136. Ammunition layout in an A-22 cargo bag for high-velocity airdrop

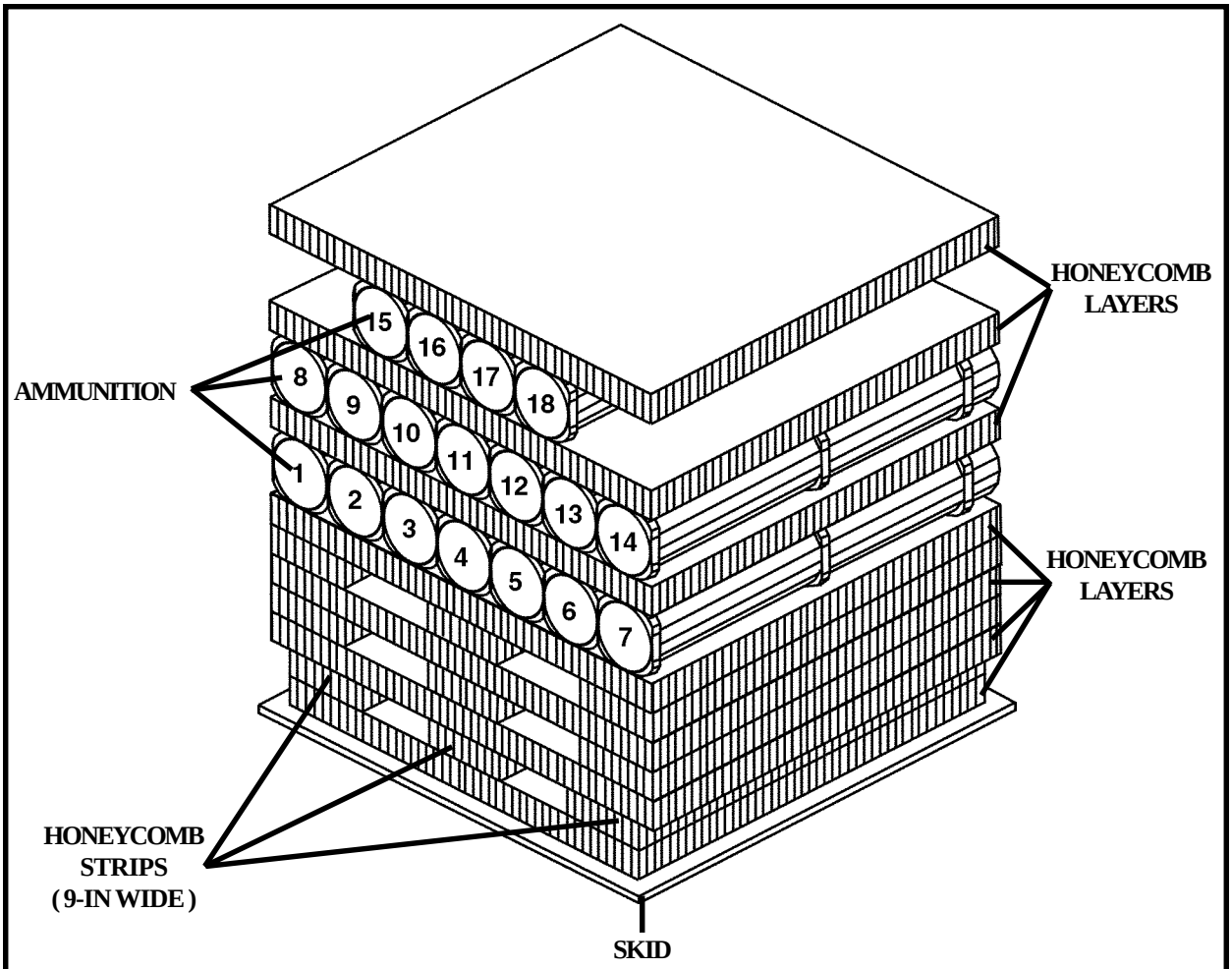

The following ammunition item is rigged in an A-22 cargo bag for high-velocity airdrop as shown in Figure 2-137.

105-Millimeter Ammunition

Cartridge, 105-mm, HERA, M913 in PA117 Containers, (DODAC 1315-C546)

Figure 2-137. Ammunition layout in an A-22 cargo bag for high-velocity airdrop

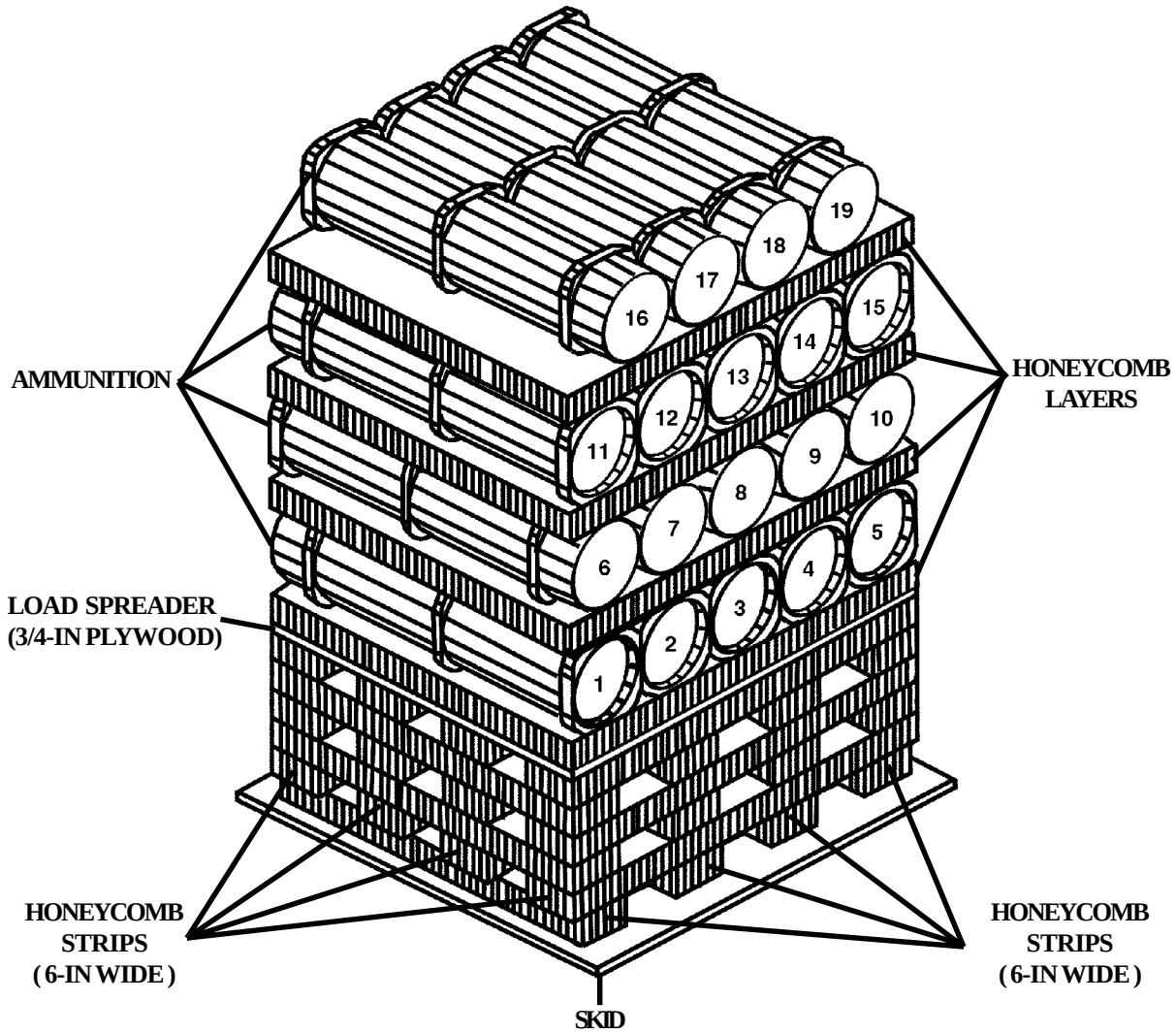

The following ammunition item is rigged in an A-22 cargo bag for high-velocity airdrop as shown in Figure 2-138.

Rockets

Rocket, 83-mm, HEDP, BDM, (DODAC 1340-HA08)

Figure 2-138. Ammunition layout in an A-22 cargo bag for high-velocity airdrop

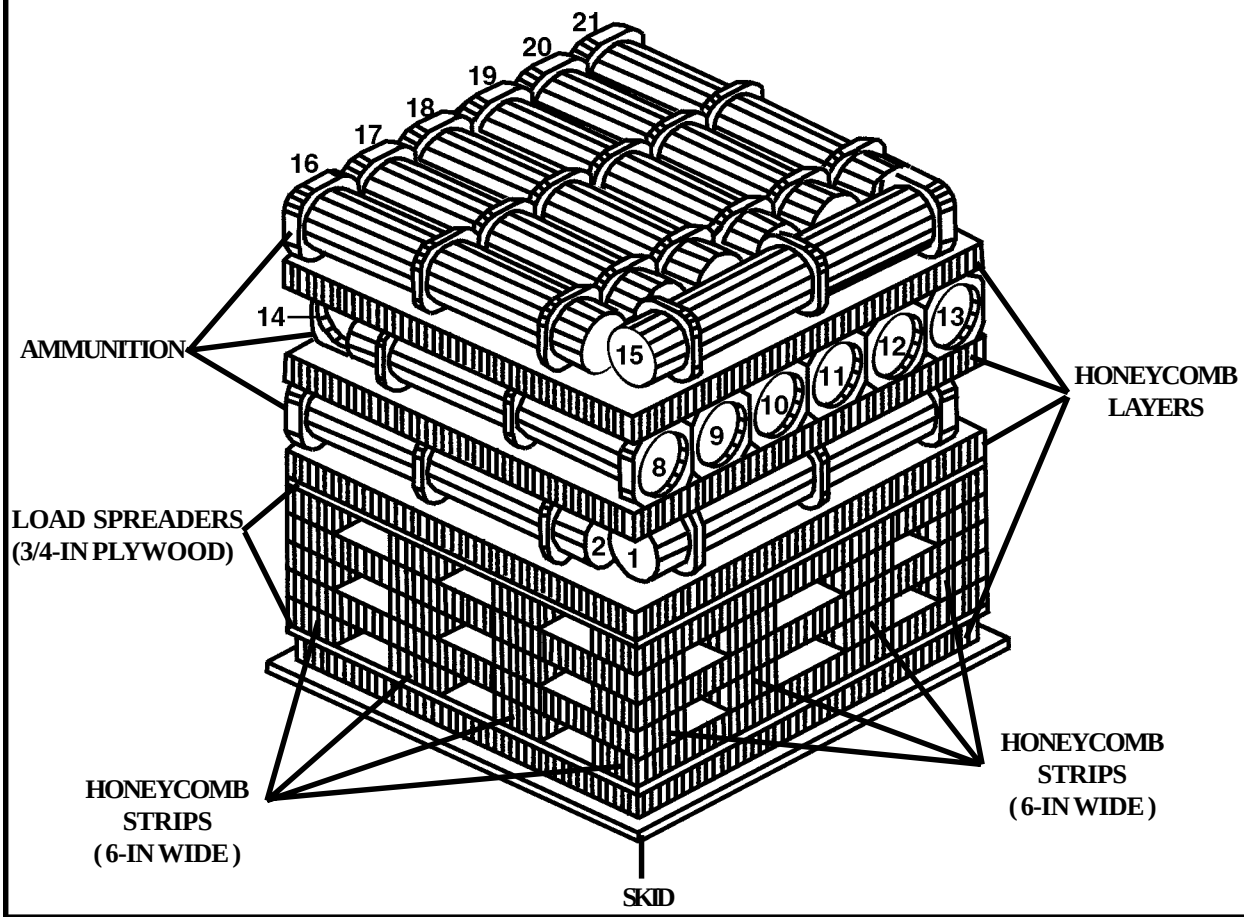

The following ammunition item is rigged in an A-22 cargo bag for high-velocity airdrop as shown in Figure 2-139.

Demolition Items

Demolition Kit, Fighting Position Excavator, M300, (DODAC 1375-MN26)

Figure 2-139. Ammunition layout in an A-22 cargo bag for high-velocity airdrop

CAUTIONS

1. **The suspended weight of this load must be between 795 pounds and 805 pounds.**
2. **The ballast used in the BCC must be contained (i.e. tied sandbags) so it does not leak outside of the BCC.**

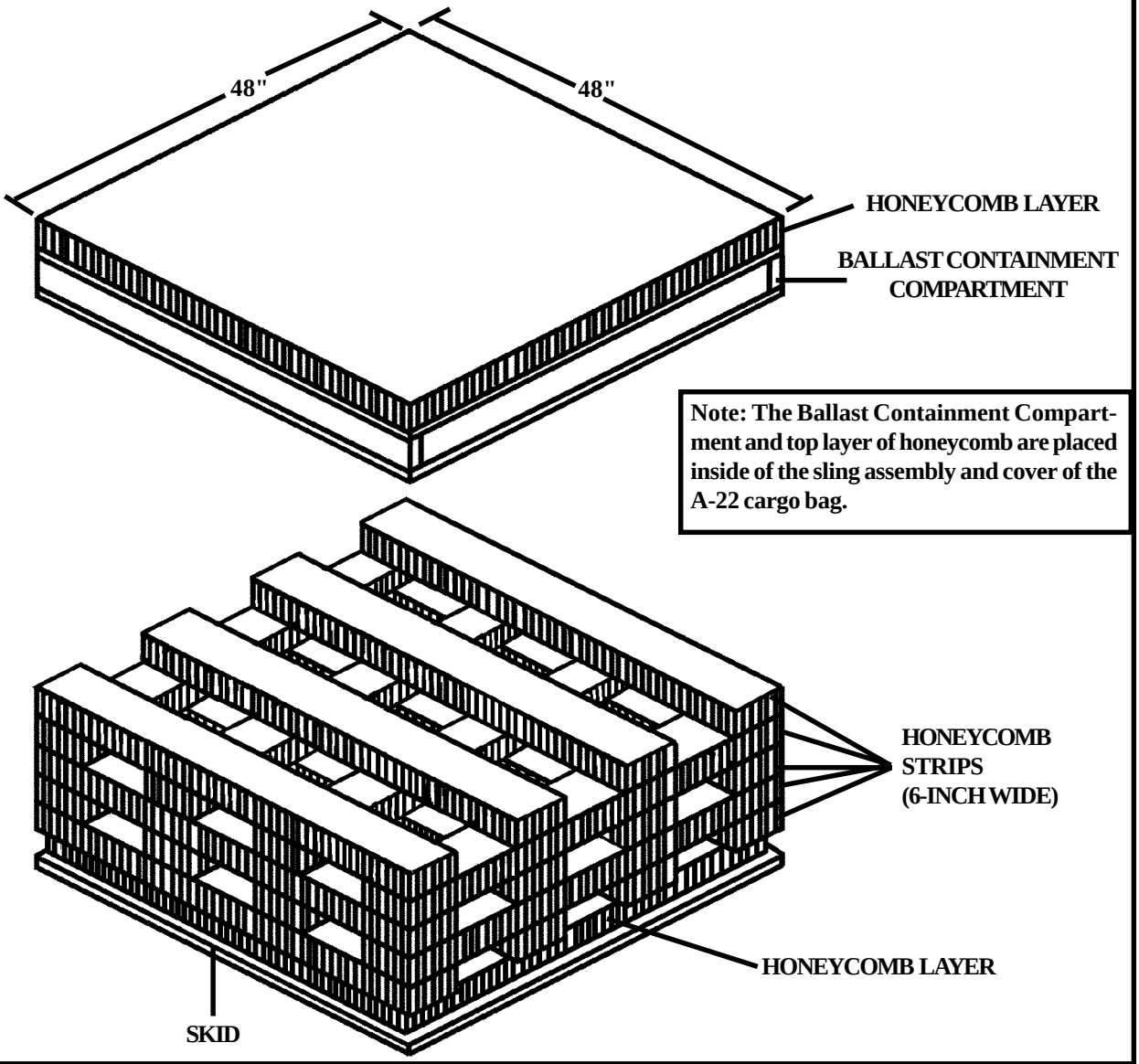

Note: The Ballast Containment Compartment and top layer of honeycomb are placed inside of the sling assembly and cover of the A-22 cargo bag.

RIGGING STEPS

1. Build the Ballast Containment Compartment (BCC) using two pieces of 2-inch X 4-inch X 48-inch lumber, two pieces of 2-inch X 4-inch X 45-inch lumber, and two pieces of 48-inch X 48-inch X 3/4-inch plywood. Do not nail the top piece of plywood until after the ballast has been added. The weight of the BCC is approximately 78 pounds.

Figure 2-140. Honeycomb stack and rigging steps for MDI munitions in an A-22 cargo bag for high velocity airdrop

2. The combined weight of the BCC, Ballast, and the Modernized Demolition Initiator (DMI) items must be between 795 and 805 pounds.

3. Weigh the MDI items, add 78 pounds (weight of the BCC), subtract this sum from 800. This figure is the amount of ballast weight that must be added in the BCC. Evenly distribute the ballast in the BCC and fill all empty spaces with honeycomb so the ballast does not move. Nail the top on the BCC.

4. Prepare and position the load on the honeycomb stack shown above in accordance with FM 10-500-3, Chapter 9, Section II. The following restrictions apply:

a. The containers (wooden crates) may be broken down into smaller packaging units.

(1) Individual corrugated cardboard boxes.
(2) Individual foil wrapped items.
(3) MDI items maybe rigged for airdrop up to their smallest unit of packaging.

b. MDI items in their smallest unit of packaging must be encased in a honeycomb bin. See Appendix B for fabrication of honeycomb bins.

c. No container may be rigged on top of a honeycomb bin except another honeycomb bin.

d. Only honeycomb bins and corrugated cardboard boxes may be rigged on top of corrugated cardboard boxes.

e. Wooden crates can only be stacked on top of other wooden crates.

f. Corrugated cardboard boxes containing spools of shock tubing (M12, M13) must be positioned so the spools are lying flat on their base.

5. Center the load on the A-22 container. Place honeycomb on all four sides of the bundle and secure the honeycomb with Type III nylon cord. Place a piece of honeycomb over the top of the load and position a piece of 3/4-inch plywood on top of the honeycomb. Close and secure the A-22 container.

The following ammunition items are rigged in an A-22 cargo bag for high-velocity airdrop using the honeycomb stack and rigging steps in Figure 2-140.

Modernized Demolition Initiators

Holder, Blasting Cap, M9, (DODAC 1375-ML45)
Cap, Blasting, Nonelectric, 30 foot Shock Tube, M11 (1.4B), (DODAC 1375-ML47)
Cap, Blasting, Nonelectric, 500 foot Shock Tube, M12 (1.4S), (DODAC 1375-MN02)
Cap, Blasting, Nonelectric, 1000 foot Shock Tube, M13 (1.4S), (DODAC 1375-MN03)
Cap, Blasting, Nonelectric, Delay, M14 (1.4S), (DODAC 1375-MN06)
Cap, Blasting, Nonelectric, Delay, M15, (DODAC 1375-MN07)
Ignitor, Time Blasting Fuze, M81, with Shock Tube Capability (1.4S), (DODAC 1375-MN08)

Figure 2-140. Honeycomb stack and rigging steps for MDI munitions in an A-22 cargo bag for high velocity airdrop (continued)

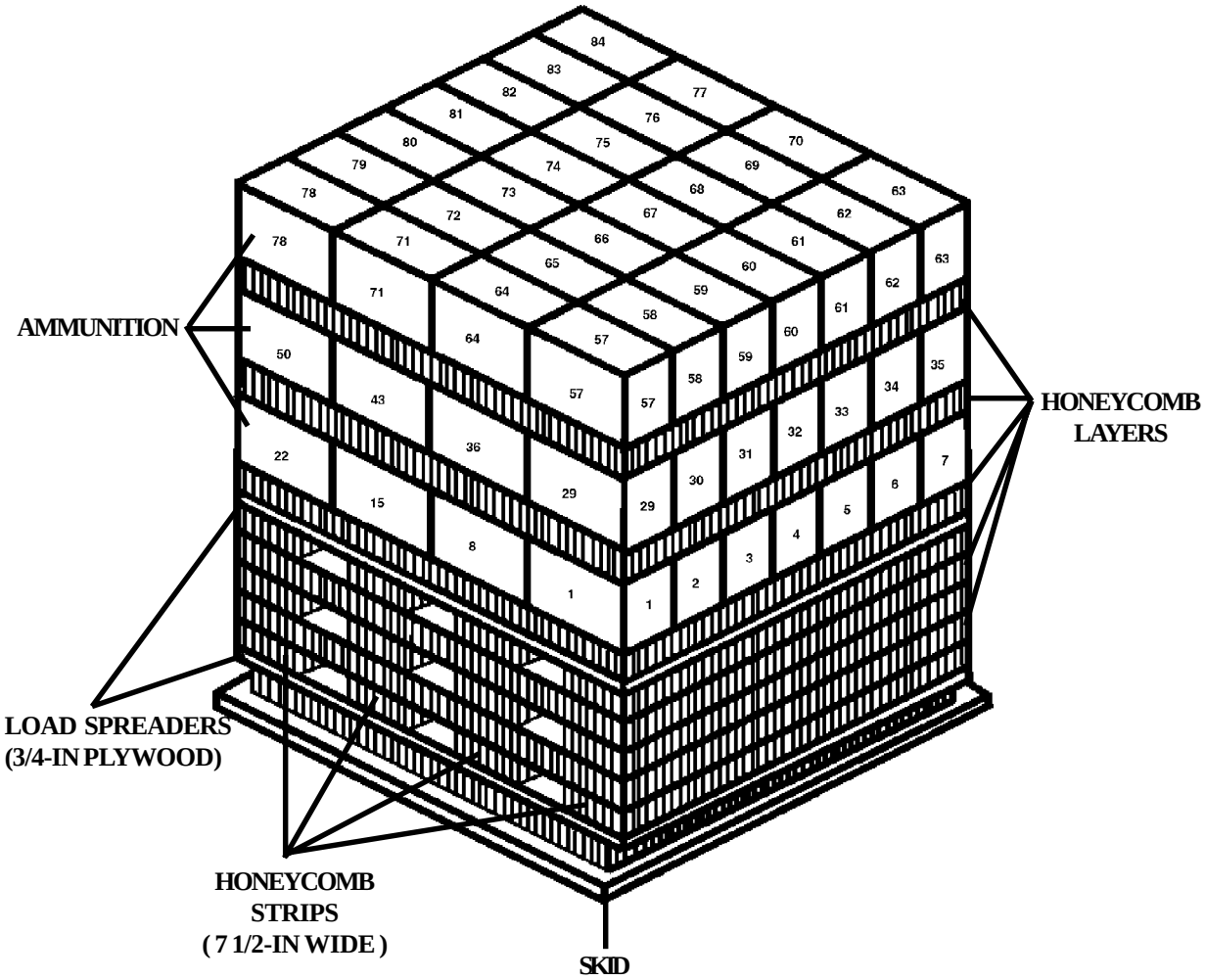

The following ammunition item is rigged in an A-22 cargo bag for high-velocity airdrop as shown in Figure 2-141.

Grenades

Grenade, Discharger, Anti-Riot, Irritant, XL96E1, (DODAC 1330-FZ14)
Grenade, Discharger, Anti-Riot, Irritant, XL97E1, (DODAC 1330-FZ15)

Figure 2-141. Ammunition layout in an A-22 cargo bag for high-velocity airdrop

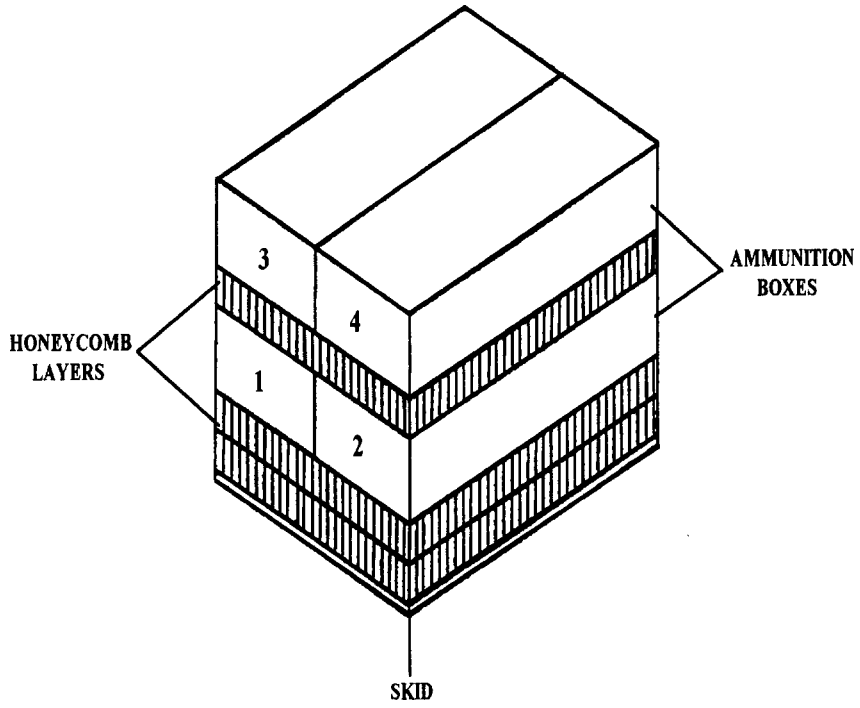

The following ammunition items are rigged in an A-7A cargo sling or an A-21 cargo bag for low-velocity airdrop as shown in Figure 3-18.

120-Millimeter Ammunition

Cartridge, 120-mm, HE, M934 with or w/o Fuze M734A1 (DODAC 1315-C379)
Cartridge, 120-mm, HE, M933 with or w/o Fuze M734A1 (DODAC 1315-C623)
Cartridge, 120-mm, M929, Smoke, WP, w/ Fuze M745 or M734A1 (DODAC 1315-C624)

Figure 3-18. Ammunition layout in an A-7A cargo sling or an A-21 cargo bag for low-velocity airdrop

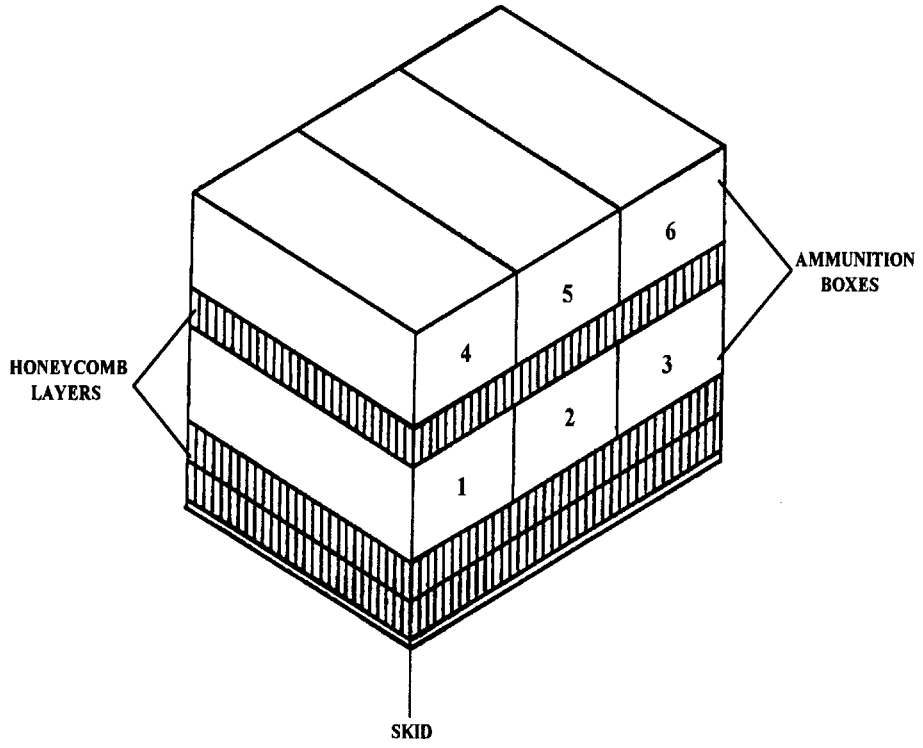

The following ammunition items are rigged in an A-7A cargo sling or an A-21 cargo bag for low-velocity airdrop as shown in Figure 3-19.

4.2-Inch Ammunition

Cartridge, 4.2-in, HE, w/o Fuze, (DODAC 1315-C697)

Figure 3-19. Ammunition layout in an A-7A cargo sling or an A-21 cargo bag for low-velocity airdrop

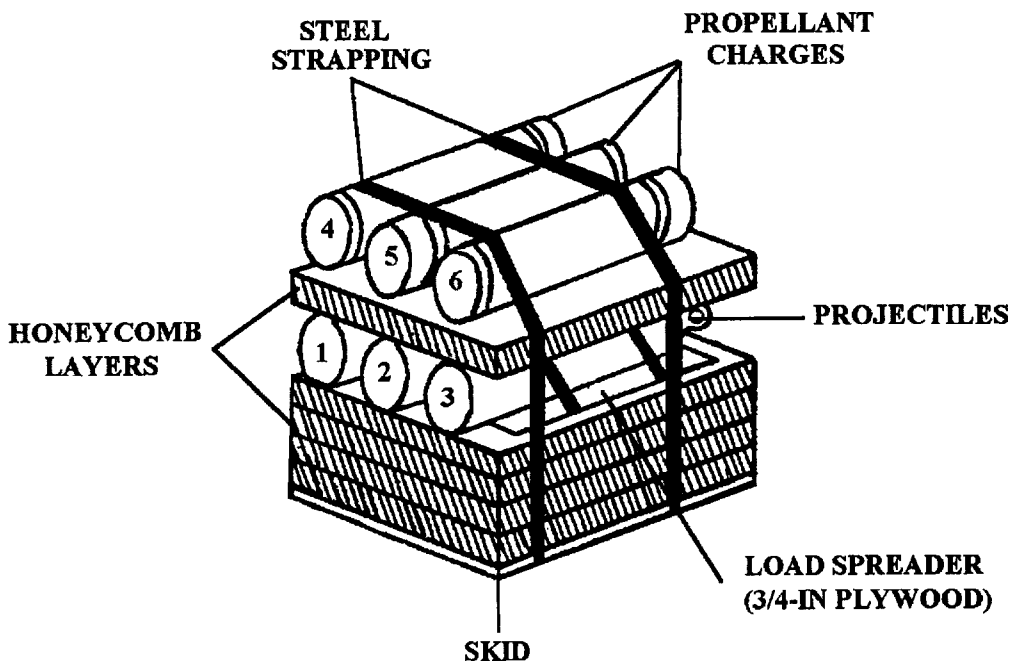

The following ammunition items are rigged in an A-7A cargo sling or an A-21 cargo bag for low-velocity airdrop as shown in Figure 3-22.

155-Millimeter Ammunition

Cartridge, Propelling, 155-mm, M19, (DODAC 1320-D480)
Projectile, 155-mm, Gas, Persistent, HD, M104, (DODAC 1320-D484)
Projectile, 155-mm, HE, M101, (DODAC 1320-D485)
Projectile, 155-mm, Smoke, WP, M104, (DODAC 1320-D487)
Reducer, Flash, Propelling Charge, M1, (DODAC 1320-D490)
Projectile, 155-mm, HE, ADAM, M692, (DODAC 1320-D501)
Projectile, 155-mm, HE, ADAM, M731, (DODAC 1320-D502)
Projectile, 155-mm, AT, RAAMS, M718, (DODAC 1320-D503)
Projectile, 155-mm, Illuminating, M485A2, (DODAC 1320-D505)
Projectile, 155-mm, HC, HE, M116E2, (DODAC 1320-D506)
Projectile, 155-mm, AT, RAAMS, M741, (DODAC 1320-D509)
Projectile, 155-mm, HE, RAAM-L, M718A1, (DODAC 1320-D515)
Projectile, 155-mm, M795, (DODAC 1320-D529)
*Charge, Propelling, 155-mm, M203A1, (DODAC 1320-D532)
*Charge, Propelling, 155-mm, M119A1 and M119A2, (DODAC 1320-D533)
*Charge, Propelling, 155-mm, M3 and M3A1, (DODAC 1320-D540)
*Charge, Propelling, 155-mm, M4A1 and M4A2, (DODAC 1320-D541)

Figure 3-22. Ammunition layout in an A-7A cargo sling or an A-21 cargo bag for low-velocity airdrop

155-Millimeter Ammunition

Projectile, 155-mm, HE, M107, (DODAC 1320-D544)
Projectile, 155-mm, Smoke, HC, BE, M116, (DODAC 1320-D548)
*Projectile, 155-mm, Smoke, WP, M110, (DODAC 1320-D550)
Reducer, Flash, Propelling Charge, M2, (DODAC 1320-D552)
Dummy, Projectile, 155-mm, M7, (DODAC 1320-D553)
Projectile, 155-mm, HE, M449A1, (DODAC 1320-D562)
Projectile, 155-mm, HE, M483A1, (DODAC 1320-D563)
Projectile, 155-mm, HE, RA, M549, (DODAC 1320-D579)
Projectile, 155-mm, M864, (DODAC 1320-D864)
Projectile, 155-mm, Smoke, WP, M825, (DODAC 1320-D528)
Fuze, Electronic Time, M762, (DODAC 1320-N289)
Fuze, Electronic Time, M767, (DODAC 1320-N290)
Fuze, Delay, Mod 1, PD, Mk399, (DODAC 1390-N659)

Note: The required fuzes and primers may be rigged as part of the load; however, only those fuzes and primers listed in Table 1-3 are authorized to be airdropped.

*The old and new type propelling charge container may be rigged.

Figure 3-22. Ammunition layout in an A-7A cargo sling or an A-21 cargo bag for low-velocity airdrop (continued)

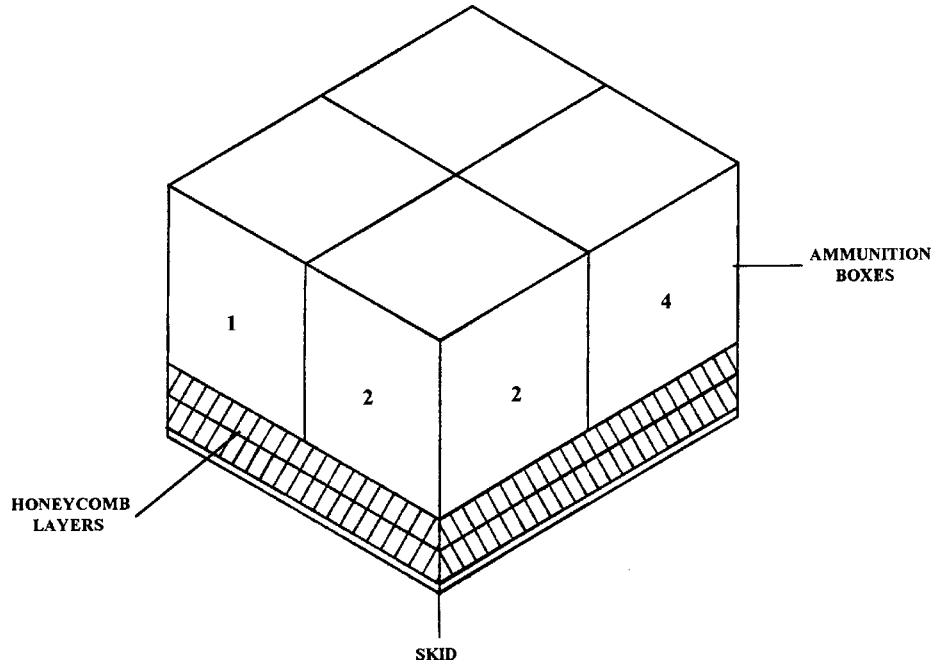

The following ammunition items are rigged in an A-7A cargo sling or an A-21 cargo bag for low-velocity airdrop as shown in Figure 3-31.

5.56-Millimeter Ammunition

Cartridge, 5.56-mm, Ball and Tracer, M856 Linked, (DODAC 1310-A064)

60-Millimeter Ammunition

Cartridge, 60-mm, HE, M720, (DODAC 1310-B642)
Cartridge, 60-mm, HE, M720E1 with M734A1 Fuze, (DODAC 1310-B642)
Cartridge, 60-mm, Smoke, WP, M722, (DODAC 1310-B646)
Cartridge, 60-mm, Illuminating, M721, (DODAC 1310-B647)
Cartridge, 60-mm, Infrared, Illuminating, M767, (DODAC 1310-BA04)

Demolition Item

Destructor, Explosive, Universal, M10, (DODAC 1375-M241)

Figure 3-31. Ammunition layout in an A-7A cargo sling or an A-21 cargo bag for low-velocity airdrop

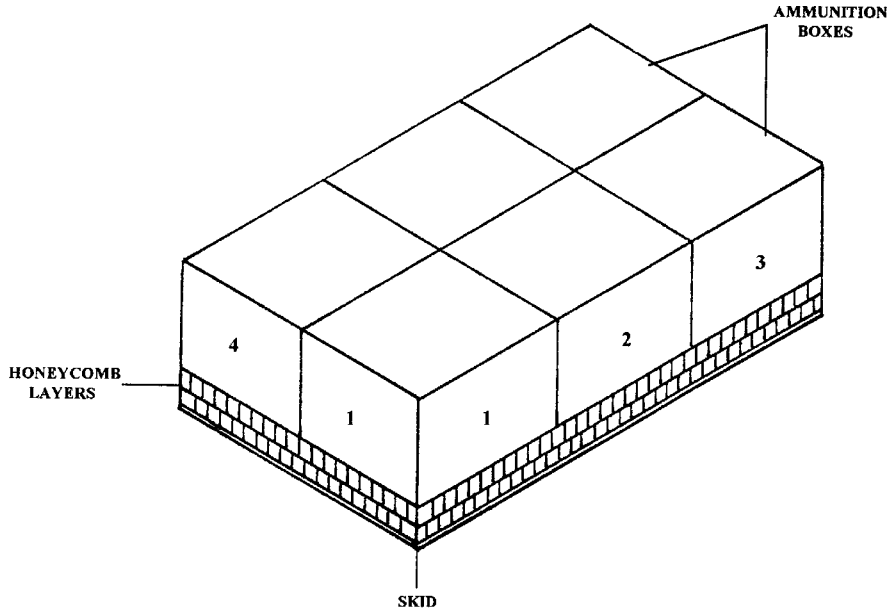

The following ammunition items are rigged in an A-7A cargo sling or an A-21 cargo bag for low-velocity airdrop as shown in Figure 3-32.

Note: Dropping these items as a single item load may not be practical; however, they can be contained in an A-7A cargo sling with other compatible items and airdropped. Quantity and type of items that can be rigged in an A-7A cargo sling are determined by the dimensions and weight of the individual ammunition container.

Fuzes

Caution
When proximity fuzes are airdropped, the boxed fuzes must be dropped in the nose-down position. If the boxes are damaged, the fuzes should not be used.

Fuze, MT, M565, (DODAC 1390-N248)
Fuze, MTSQ, M500 or M500A1, (DODAC 1390-N275)
Fuze, MTSQ, M500 or M500A1, (DODAC 1390-N276)
Fuze, MT, M564, (DODAC 1390-N278)
Fuze, MTSQ, M520, (DODAC 1390-N280)
Fuze, MTSQ, M577, (DODAC 1390-N285)

Figure 3-32. Ammunition layout in an A-7A cargo sling or an A-21 cargo bag for low-velocity airdrop

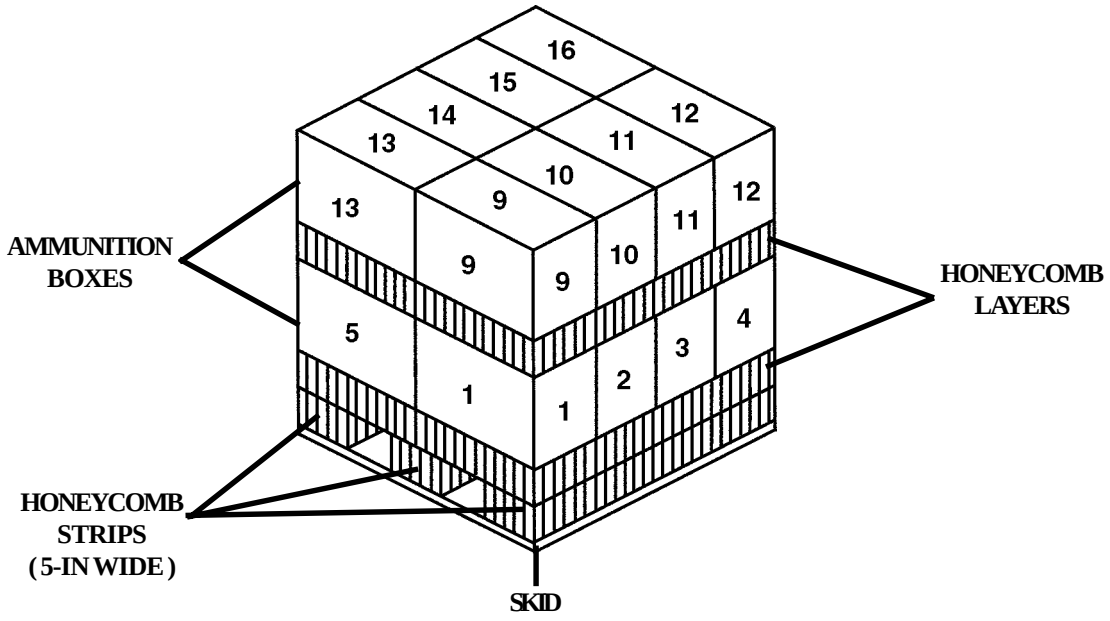

The following ammunition items are rigged in an A-7A cargo sling or an A-21 cargo bag for low-velocity airdrop as shown in Figure 3-33.1.

155-Millimeter Ammunition

Fuze, Delay, Mod 1, PD, Mk399, (DODAC 1390-N659)

Figure 3-33.1. Ammunition layout in an A-7A cargo sling or an A-21 cargo bag for low-velocity airdrop

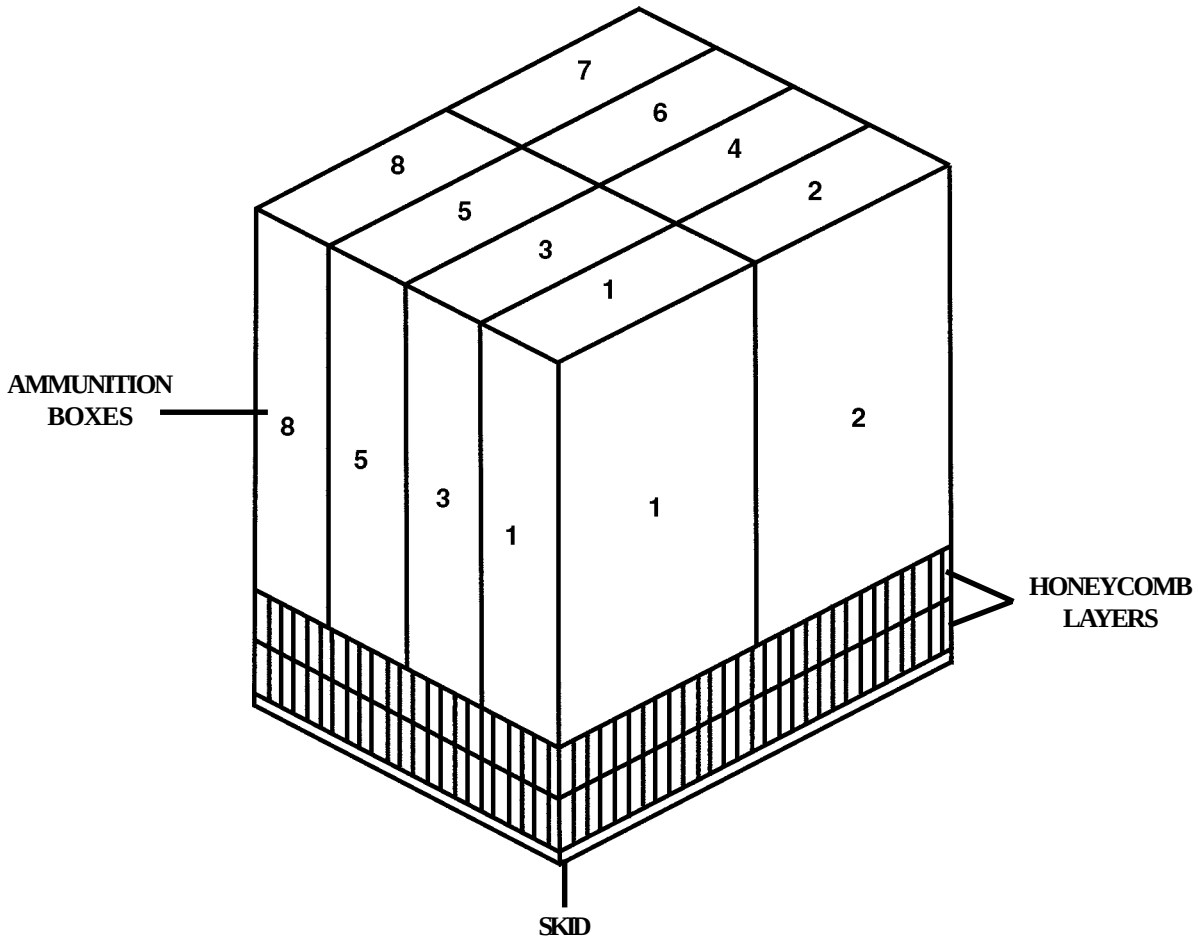

The following ammunition items are rigged in an A-7A cargo sling or an A-21 cargo bag for low-velocity airdrop as shown in Figure 3-33.2.

81-Millimeter Ammunition

Cartridge, 81-mm, HE, M821A1, with Fuze M734A1, (DODAC 1315-C868)
Cartridge, 81-mm, HE, M889A1, (DODAC 1315-C869)

Figure 3-33.2. Ammunition layout in an A-7A cargo sling or an A-21 cargo bag for low-velocity airdrop

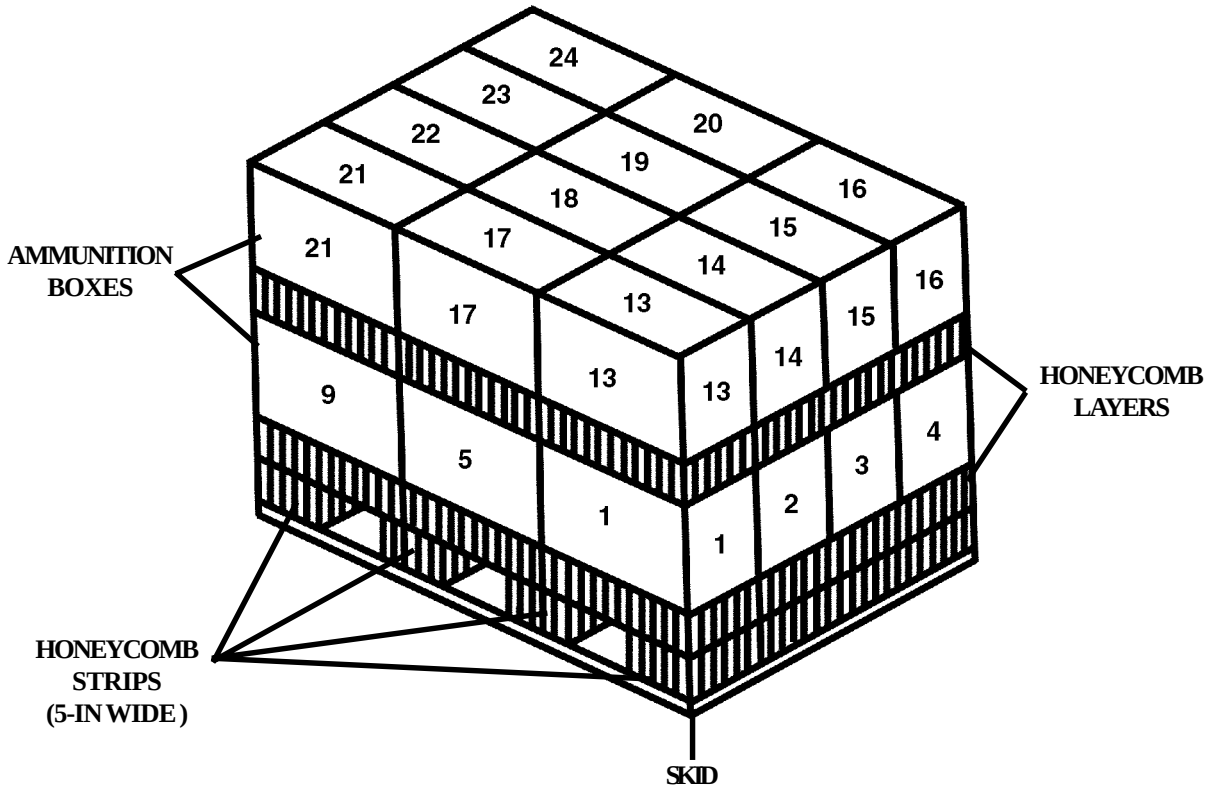

The following ammunition items are rigged in an A-7A cargo sling or an A-21 cargo bag for low-velocity airdrop as shown in Figure 3-33.3.

Grenades

Launcher, Grenade, Smoke, Screening, TA, M90, (DODAC 1315-C868)

Figure 3-33.3. Ammunition layout in an A-7A cargo sling or an A-21 cargo bag for low-velocity airdrop

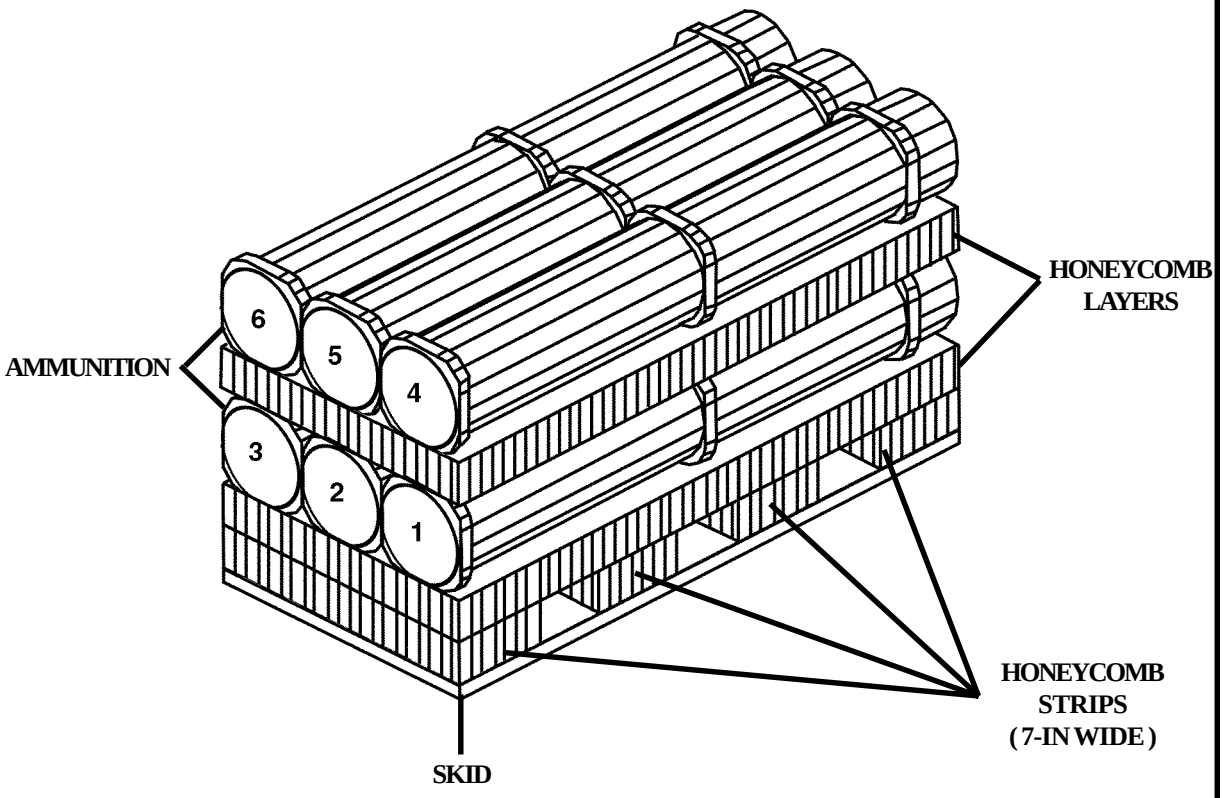

The following ammunition items are rigged in an A-7A cargo sling or an A-21 cargo bag for low-velocity airdrop as shown in Figure 3-33.4.

105-Millimeter Ammunition

Cartridge, 105-mm, HERA, M913 in PA117 Containers, (DODAC 1315-C546)

Figure 3-33.4. Ammunition layout in an A-7A cargo sling or an A-21 cargo bag for low-velocity airdrop

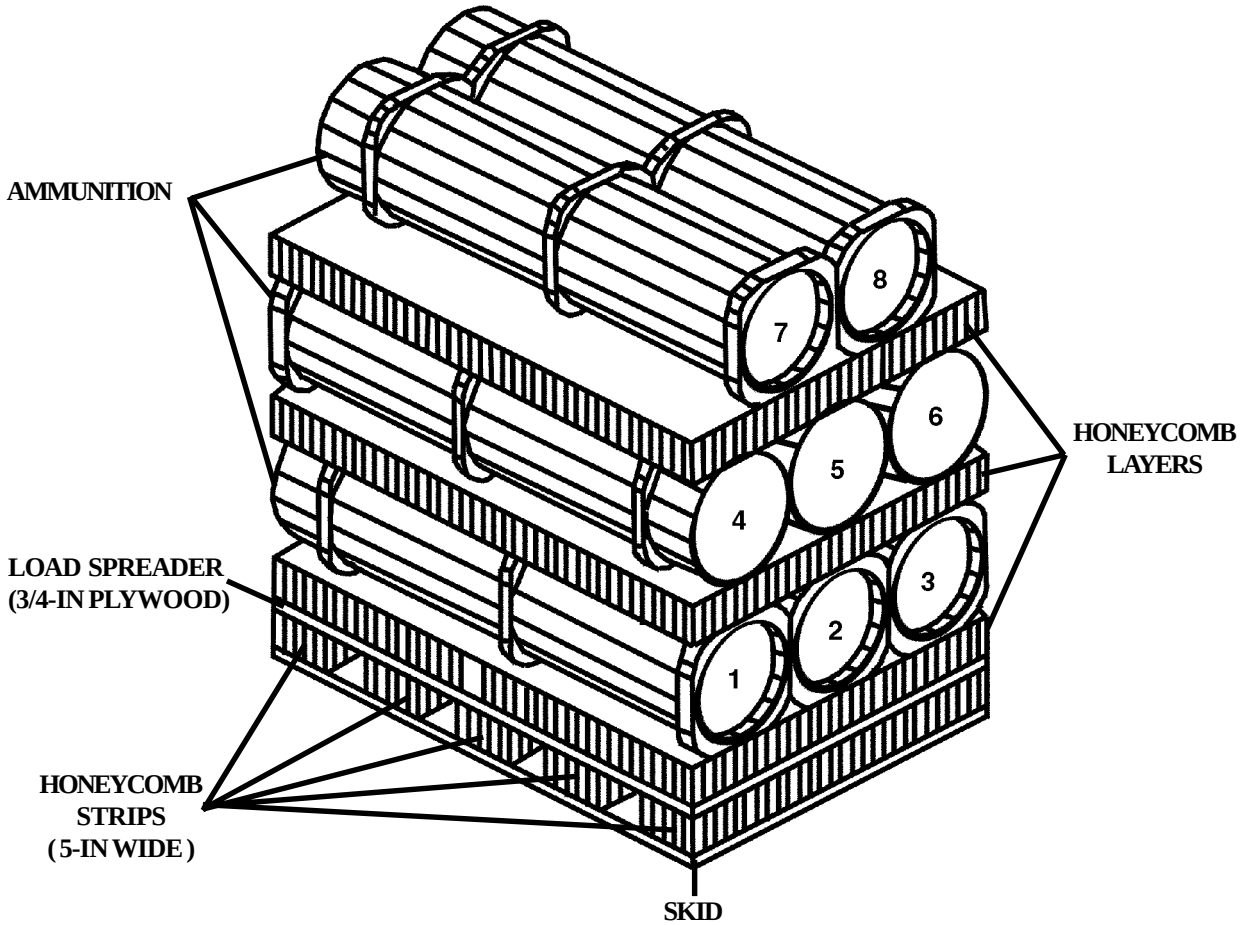

The following ammunition items are rigged in an A-7A cargo sling or an A-21 cargo bag for low-velocity airdrop as shown in Figure 3-33.5.

Rockets

Rocket, 83-mm, HEDP, BDM, (DODAC 1340-HA08)

Figure 3-33.5. Ammunition layout in an A-7A cargo sling or an A-21 cargo bag for low-velocity airdrop

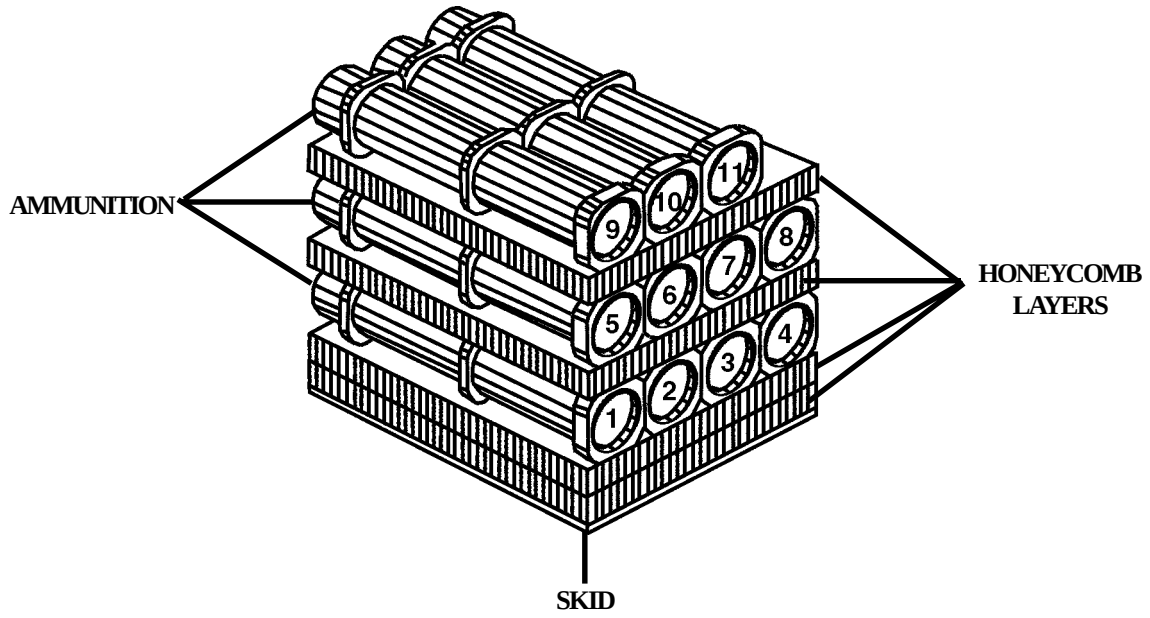

The following ammunition items are rigged in an A-7A cargo sling or an A-21 cargo bag for low-velocity airdrop as shown in Figure 3-33.6.

Demolition Item

Demolition Kit, Fighting Position Excavator, M300, (DODAC 1340-HA08)

Figure 3-33.6. Ammunition layout in an A-7A cargo sling or an A-21 cargo bag for low-velocity airdrop

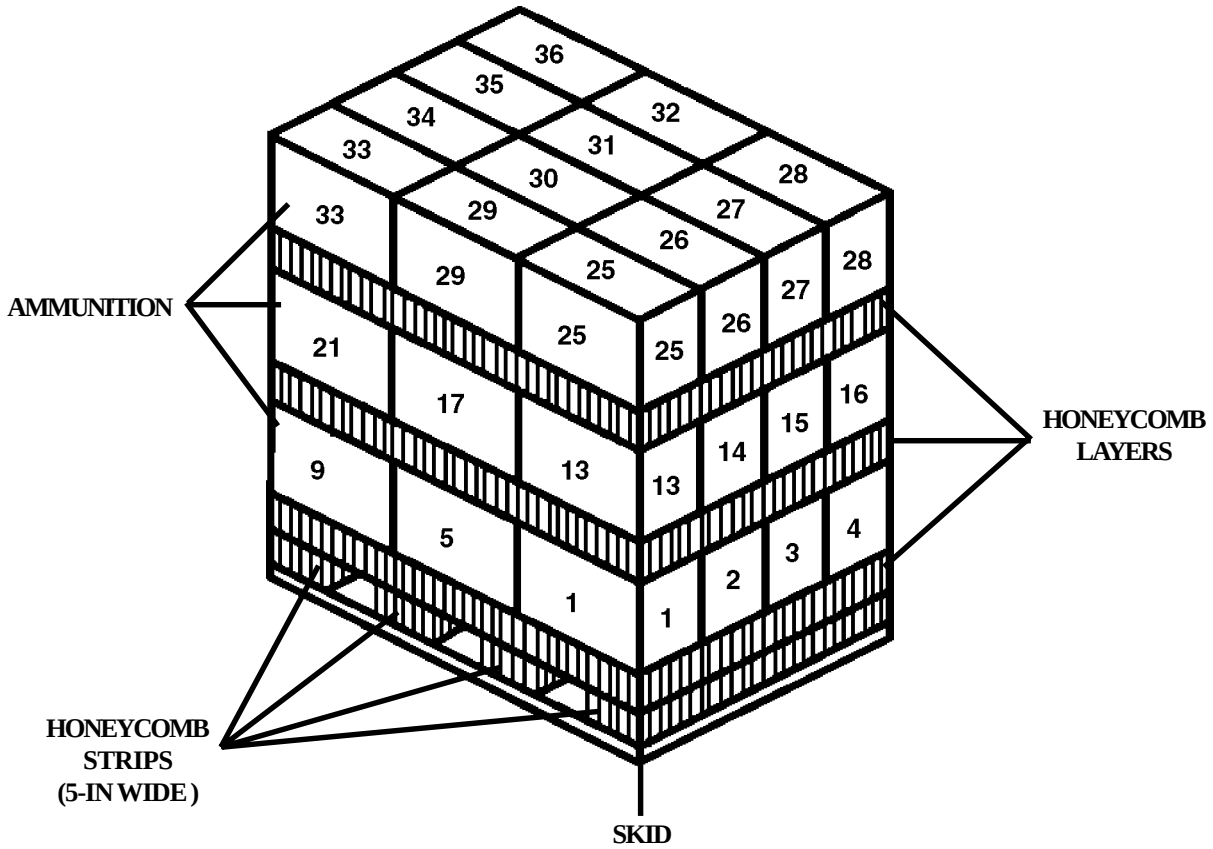

The following ammunition items are rigged in an A-7A cargo sling or an A-21 cargo bag for low-velocity airdrop as shown in Figure 3-33.7.

Grenades

Grenade, Discharger, Anti-Riot, Irritant, XL96E1, (DODAC 1330-FZ14)
Grenade, Discharger, Anti-Riot, Irritant, XL97E1, (DODAC 1330-FZ15)

Figure 3-33.7. Ammunition layout in an A-7A cargo sling or an A-21 cargo bag for low-velocity airdrop

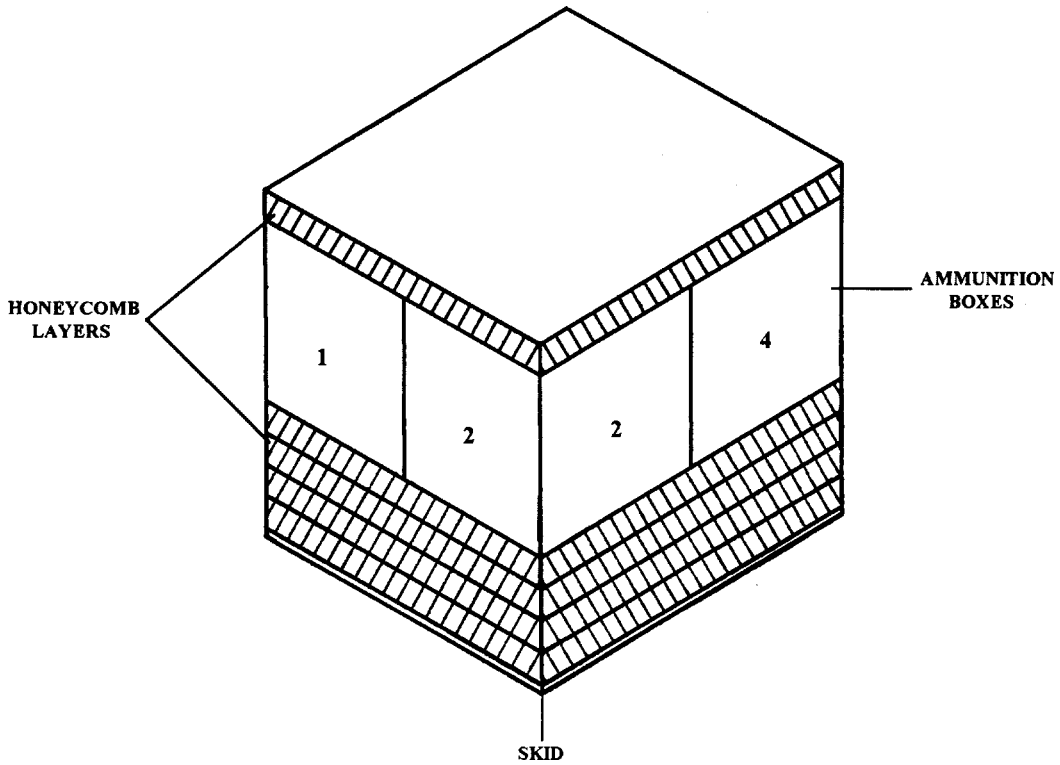

The following ammunition items are rigged in an A-7A cargo sling or an A-21 cargo bag for high-velocity airdrop as shown in Figure 3-48.

60-Millimeter Ammunition

Cartridge, 60-mm, HE, M720, (DODAC 1310-B642)
Cartridge, 60-mm, Smoke, WP, M722, (DODAC 1310-B646)
Cartridge, 60-mm, Illuminating, M721, (DODAC 1310-B647)
Cartridge, 60-mm, Infrared, Illuminating, M767, (DODAC 1310-BA04)

Demolition Item

Destructor, Explosive, Universal, M10, (DODAC 1375-M241)

Figure 3-48. Ammunition layout in an A-7A cargo sling or an A-21 cargo bag for high-velocity airdrop

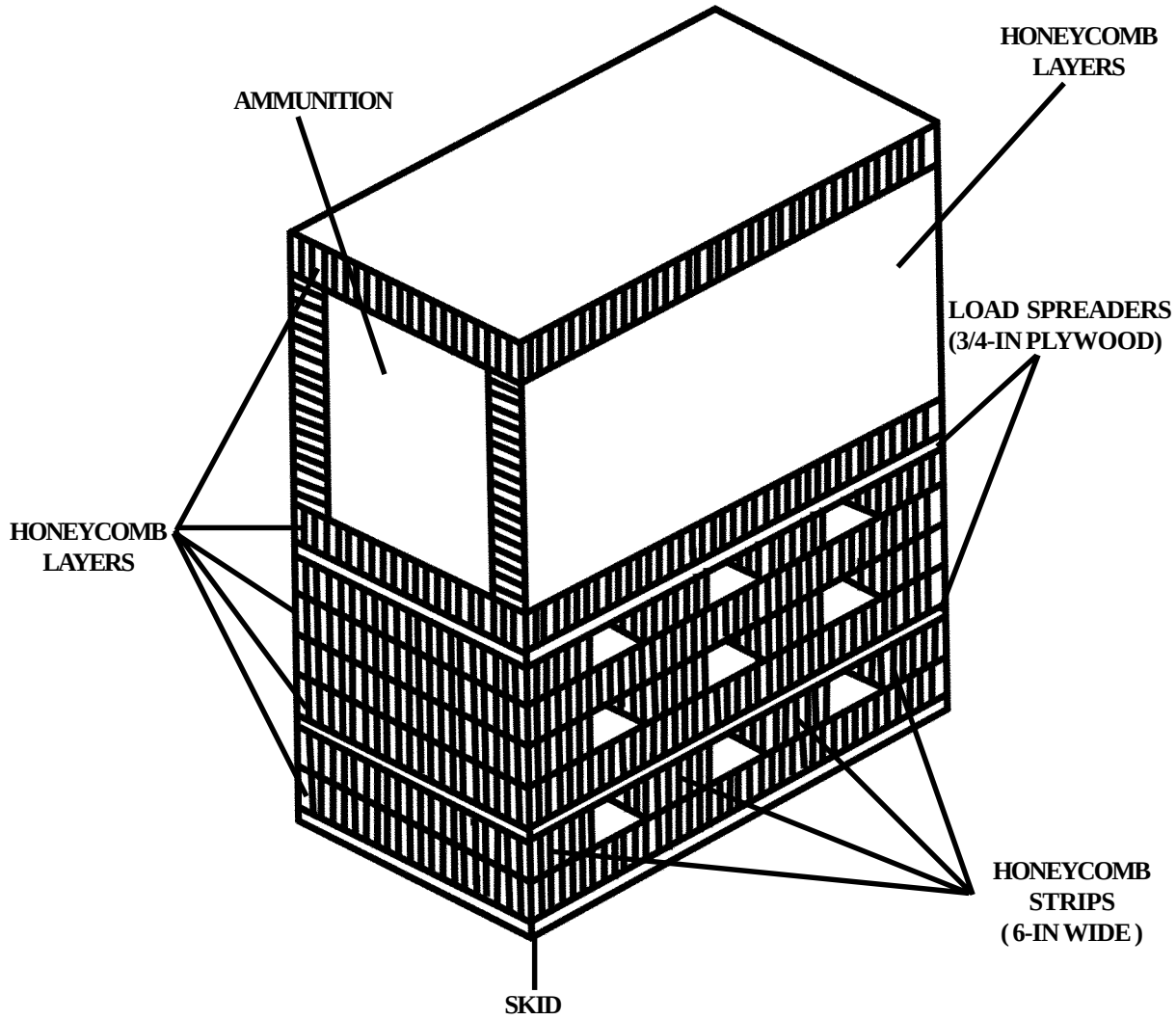

The following ammunition items are rigged in an A-7A cargo sling or an A-21 cargo bag for high-velocity airdrop as shown in Figure 3-48.1.

60-Millimeter Ammunition

Cartridge, 60-mm, HE, M720E1 with M734A1 Fuze (DODAC 1310-B642)

Figure 3-48.1. Ammunition layout in an A-7A cargo sling or an A-21 cargo bag for high-velocity airdrop

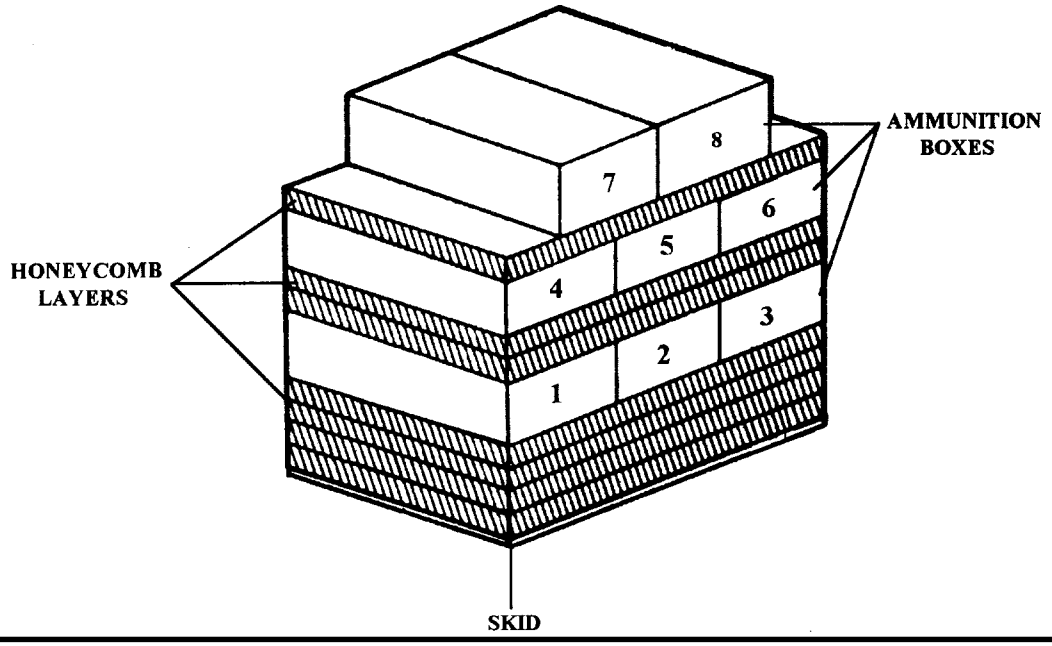

The following ammunition items are rigged in an A-7A cargo sling or an A-21 cargo bag for high-velocity airdrop as shown in Figure 3-49.

81-Millimeter Ammunition

Cartridge, 81-mm, HE, M362, (DODAC 1315-C222)
Cartridge, 81-mm, HE, M372, (DODAC 1315-C223)
Cartridge, 81-mm, HE, M43A1, (DODAC 1315-C225)
Cartridge, 81-mm, Smoke, WP, M57, (DODAC 1315-C230)

90-Millimeter Ammunition

Cartridge, 90-mm, Heat, M371, (DODAC 1315-C282)

Demolition Item

Charge, Demolition, Block, 40-lb, Cratering, Ammonium Nitrate, (DODAC 1375-M039)

Figure 3-49. Ammunition layout in an A-7A cargo sling or an A-21 cargo bag for high-velocity airdrop

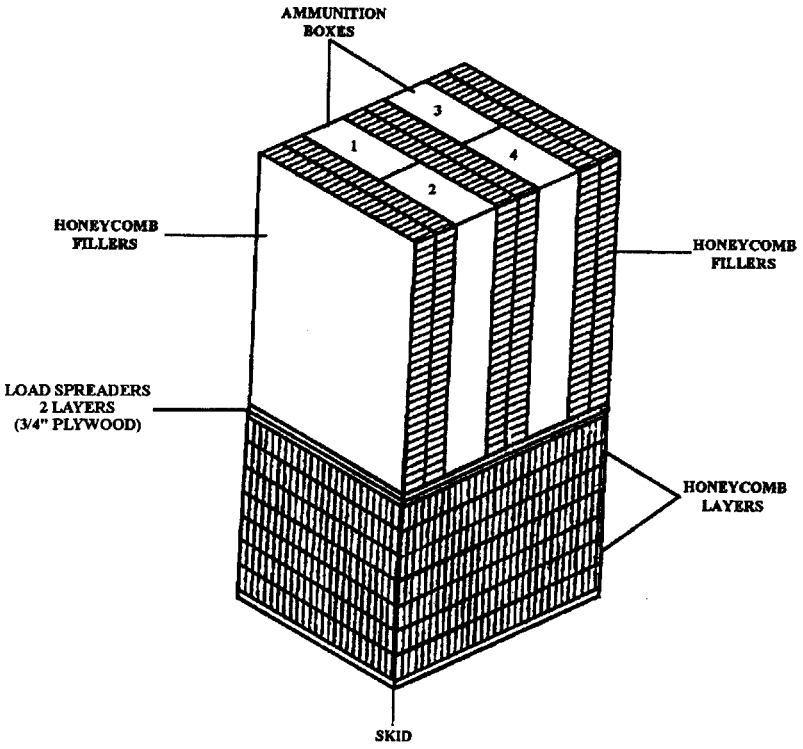

The following ammunition items are rigged in an A-7A cargo sling or an A-21 cargo bag for high-velocity airdrop as shown in Figure 3-52.

120-Millimeter Ammunition

Cartridge, 120-mm, HE, M934 with or w/o Fuze M734A1 (DODAC 1315-C379)
Cartridge, 120-mm, HE, M933 with or w/o Fuze M734A1 (DODAC 1315-C623)
Cartridge, 120-mm, M929, Smoke, WP, w/ Fuze M745 or M734A1 (DODAC 1315-C624)

Figure 3-52. Ammunition layout in an A-7A cargo sling or an A-21 cargo bag for high-velocity airdrop

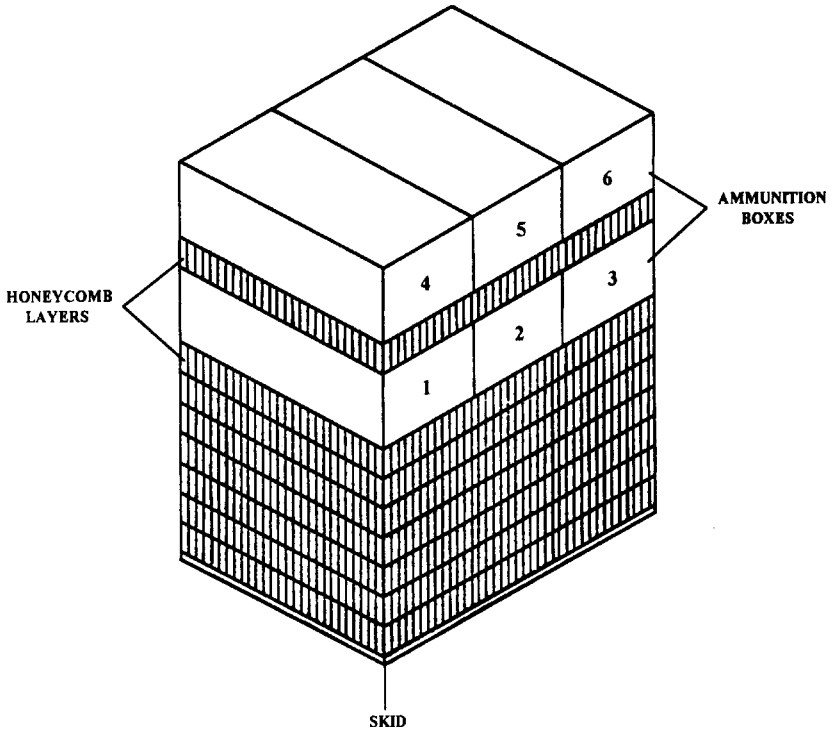

The following ammunition items are rigged in an A-7A cargo sling or an A-21 cargo bag for high-velocity airdrop as shown in Figure 3-53.

4.2-Inch Ammunition

Cartridge, 4.2-in, HE, w/o Fuze, (DODAC 1315-C697)

Figure 3-53. Ammunition layout in an A-7A cargo sling or an A-21 cargo bag high low-velocity airdrop

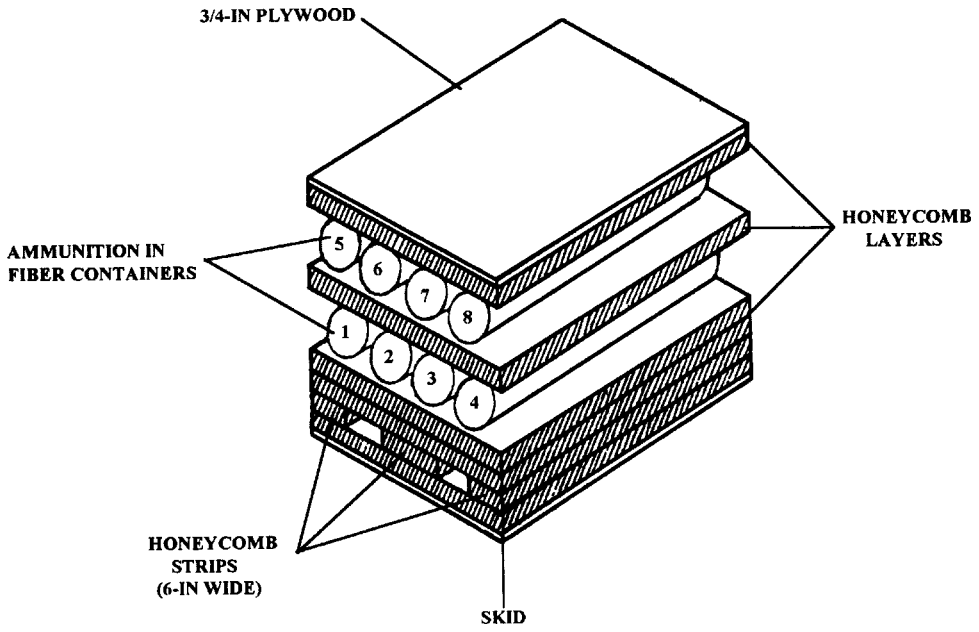

The following ammunition items are rigged in an A-7A cargo sling or an A-21 cargo bag for high-velocity airdrop as shown in Figure 3-56.

105-Millimeter Ammunition
(Rigging Fiber Containers)

Cartridge, 105-mm, HEAT-T, M456A1E2, (DODAC 1315-C508)
Cartridge, 105-mm, TP-T, M490, (DODAC 1315-C511)

152-Millimeter Ammunition
(Rigging Fiber Containers)

Cartridge,152-mm, HEAT-MP, M409E6, (DODAC 1320-D381)
Cartridge,152-mm, Canister, M625A1, (DODAC 1320-D390)

Figure 3-56. Ammunition layout in an A-7A cargo sling or an A-21 cargo bag high low-velocity airdrop

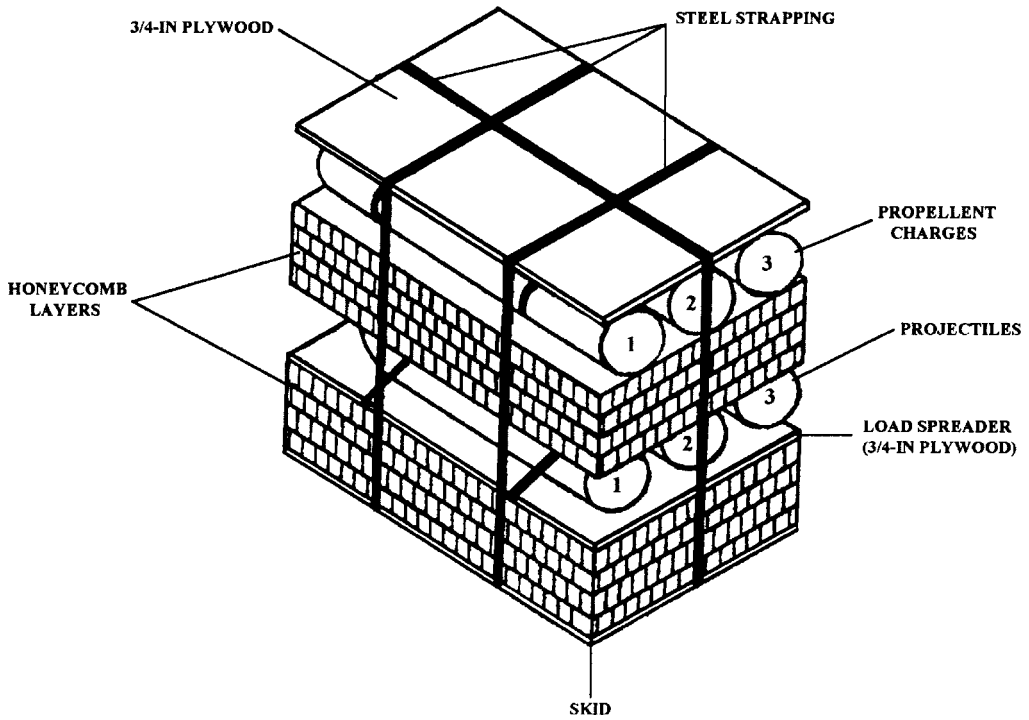

The following ammunition items are rigged in an A-7A cargo sling or an A-21 cargo bag for high-velocity airdrop as shown in Figure 3-57.

155-Millimeter Ammunition

Cartridge, Propelling, 155-mm, M19, (DODAC 1320-D480)
Projectile, 155-mm, Gas, Persistent, HD, M104, (DODAC 1320-D484)
Projectile, 155-mm, HE, M101, (DODAC 1320-D485)
Projectile, 155-mm, Smoke, WP, M104, (DODAC 1320-D487)
Reducer, Flash, Propelling Charge, M1, (DODAC 1320-D490)
Projectile, 155-mm, HE, ADAM, M692, (DODAC 1320-D501)
Projectile, 155-mm, HE, ADAM, M731, (DODAC 1320-D502)
Projectile, 155-mm, AT, RAAMS, M718, (DODAC 1320-D503)
Projectile, 155-mm, Illuminating, M485A2, (DODAC 1320-D505)
Projectile, 155-mm, HC, HE, M116E2, (DODAC 1320-D506)
Projectile, 155-mm, AT, RAAMS, M741, (DODAC 1320-D509)
Projectile, 155-mm, HE, RAAM-L, M718A1, (DODAC 1320-D515)
Projectile, 155-mm, Smoke, WP, M825, (DODAC 1320-D528)
Projectile, 155-mm, M795, (DODAC 1320-D529)
*Charge, Propelling, 155-mm, M203A1, (DODAC 1320-D532)
*Charge, Propelling, 155-mm, M119A1 and M119A2, (DODAC 1320-D533)
*Charge, Propelling, 155-mm, M3 and M3A1, (DODAC 1320-D540)

Figure 3-57. Ammunition layout in an A-7A cargo sling or an A-21 cargo bag for high-velocity airdrop

155-Millimeter Ammunition

*Charge, Propelling, 155-mm, M4A1 and M4A2, (DODAC 1320-D541)
Projectile, 155-mm, HE, M107, (DODAC 1320-D544)
Projectile, 155-mm, Smoke, HC, BE, M116, (DODAC 1320-D548)
*Projectile, 155-mm, Smoke, WP, M110, (DODAC 1320-D550)
Reducer, Flash, Propelling Charge, M2, (DODAC 1320-D552)
Dummy, Projectile, 155-mm, M7, (DODAC 1320-D553)
Projectile, 155-mm, HE, M449A1, (DODAC 1320-D562)
Projectile, 155-mm, HE, M483A1, (DODAC 1320-D563)
Projectile, 155-mm, HE, RA, M549, (DODAC 1320-D579)
Fuze, Delay, Mod 1, PD, Mk399, (DODAC 1390-N659)

Note: The required fuzes and primers may be rigged as part of the load; however, only those fuzes and primers listed in Table 1-3 are authorized to be airdropped.

*The old and new type propelling charge container may be rigged.

Figure 3-57. Ammunition layout in an A-7A cargo sling or an A-21 cargo bag for low-velocity airdrop (continued)

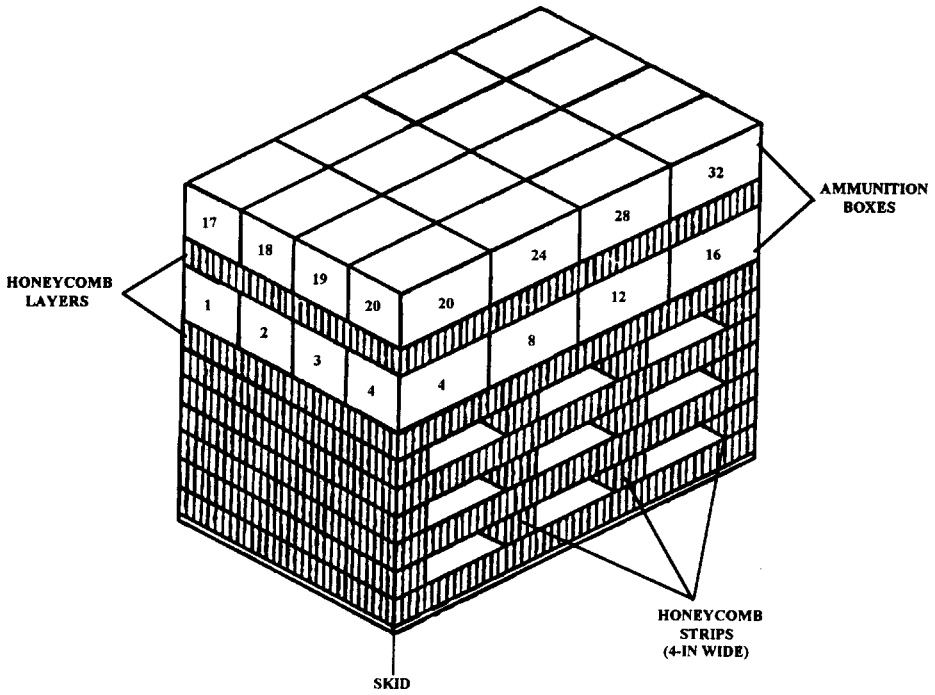

The following ammunition items are rigged in an A-7A cargo sling or an A-21 cargo bag for high-velocity airdrop as shown in Figure 3-58.

Grenades

Grenade, 40-mm, Smoke, Screening, L8A3, (DODAC 1340-G815)

Figure 3-58. Ammunition layout in an A-7A cargo sling or an A-21 cargo bag for high-velocity airdrop

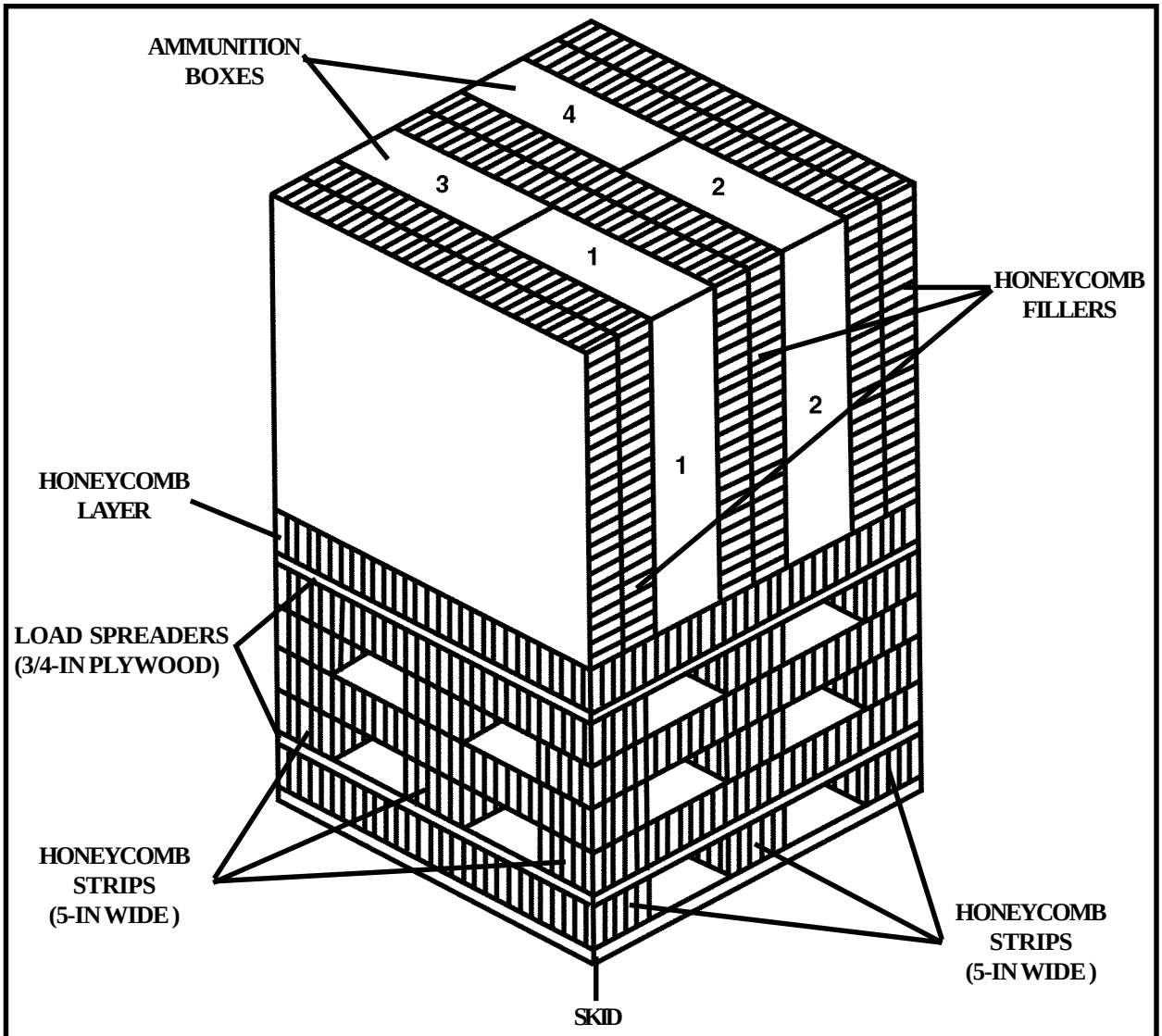

The following ammunition items are rigged in an A-7A cargo sling or an A-21 cargo bag for high-velocity airdrop as shown in Figure 3-72.

81-Millimeter Ammunition

Cartridge, 81-mm, HE, M821A1, with Fuze M734A1, (DODAC 1315-C868)
Cartridge, 81-mm, HE, M889A1, (DODAC 1315-C869)

Figure 3-72. Ammunition layout in an A-7A cargo sling or an A-21 cargo bag for high-velocity airdrop

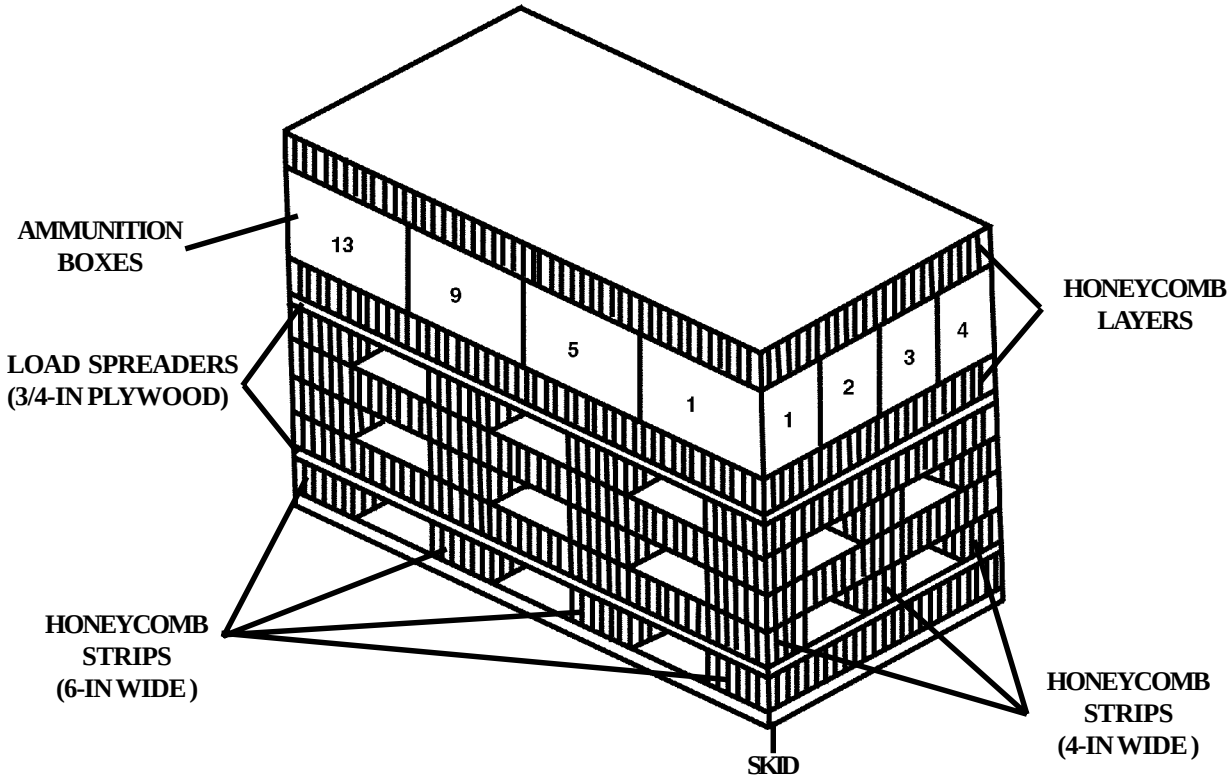

The following ammunition items are rigged in an A-7A cargo sling or an A-21 cargo bag for high-velocity airdrop as shown in Figure 3-73.

Grenades

Launcher, Grenade, Smoke, Screening, TA, M90, (DODAC 1315-C868)

Figure 3-73. Ammunition layout in an A-7A cargo sling or an A-21 cargo bag for high-velocity airdrop

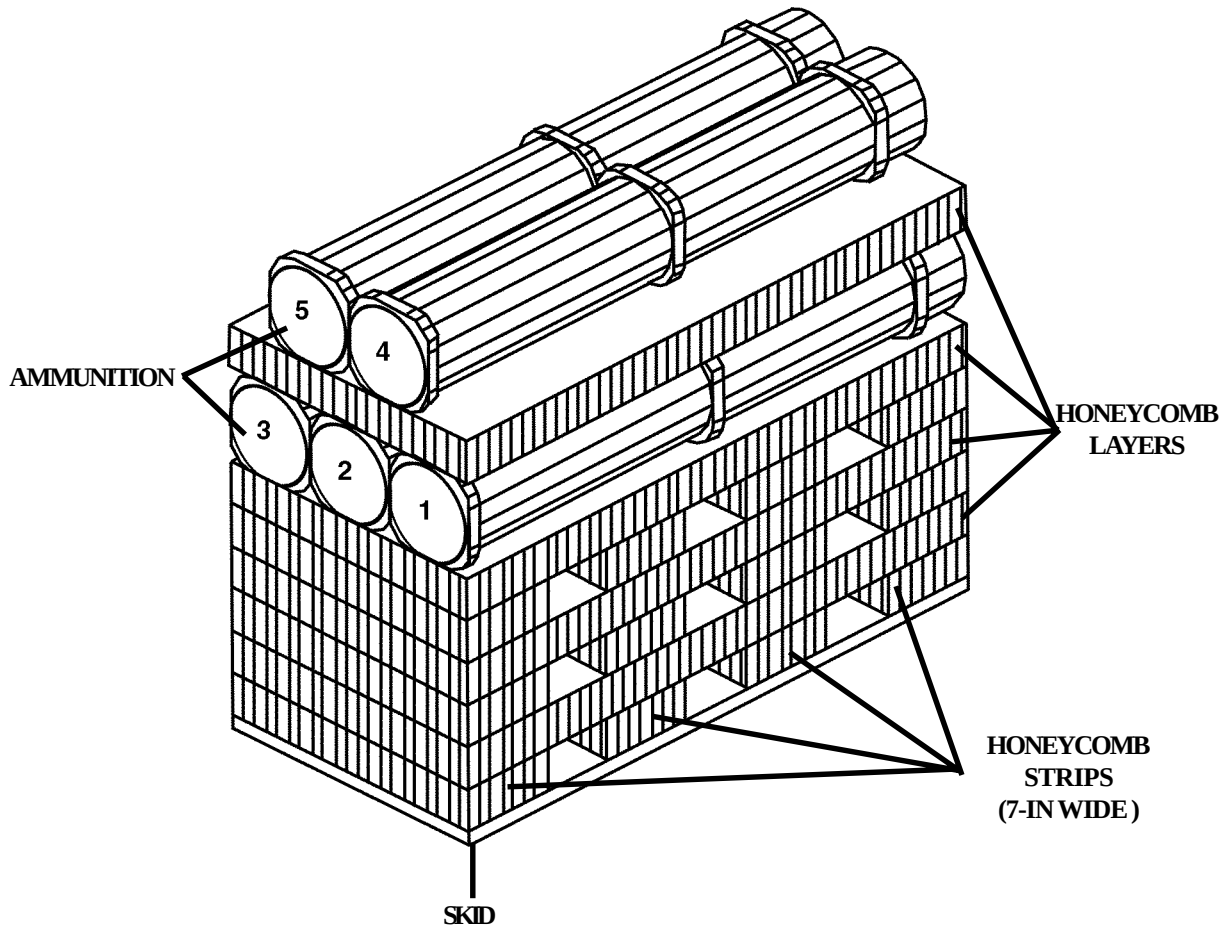

The following ammunition items are rigged in an A-7A cargo sling or an A-21 cargo bag for high-velocity airdrop as shown in Figure 3-74.

105-Millimeter Ammunition

Cartridge, 105-mm, HERA, M913 in PA117 Containers, (DODAC 1315-C546)

Figure 3-74. Ammunition layout in an A-7A cargo sling or an A-21 cargo bag for high-velocity airdrop

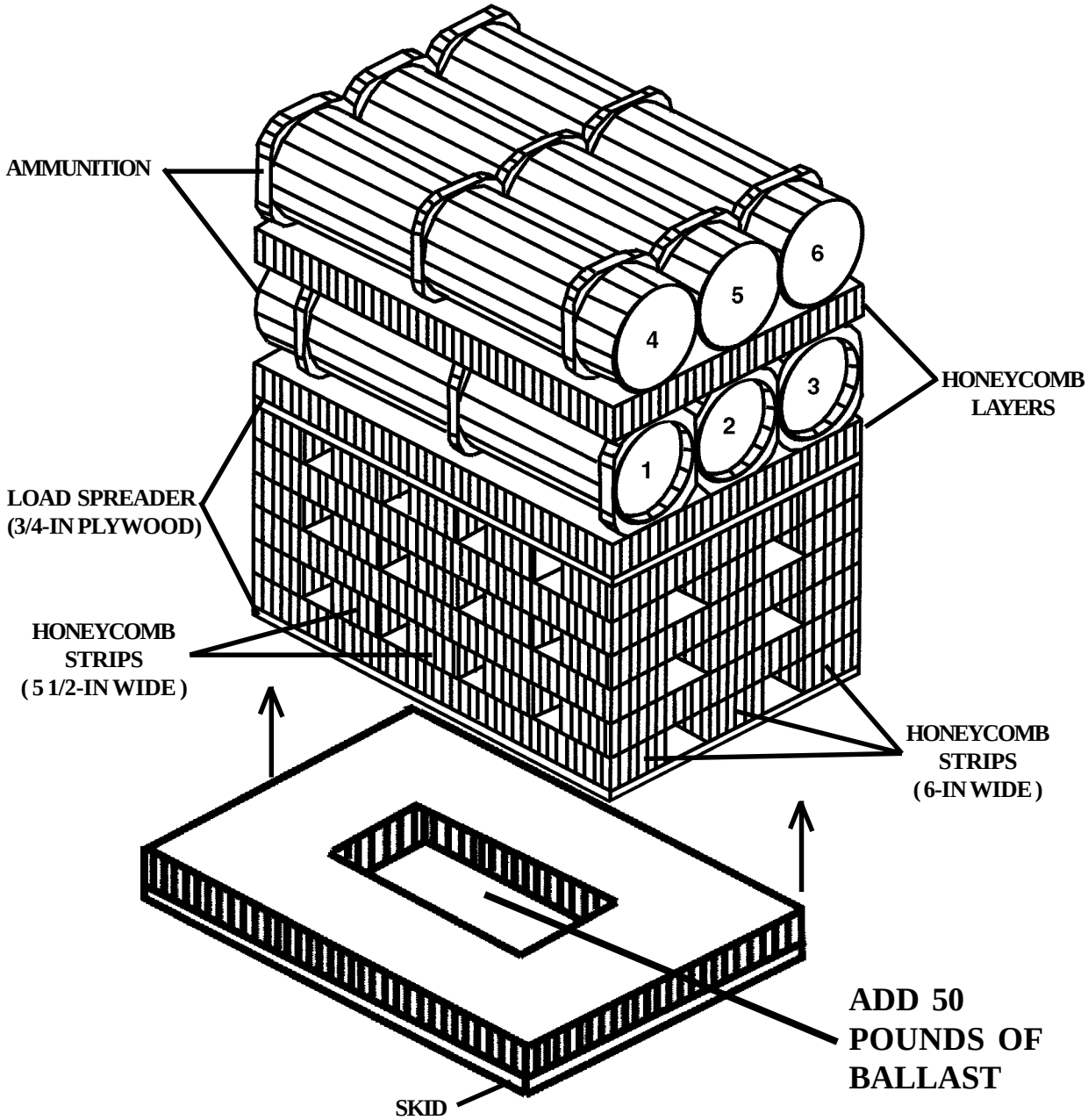

The following ammunition items are rigged in an A-7A cargo sling or an A-21 cargo bag for high-velocity airdrop as shown in Figure 3-75.

Rockets

Rocket, 83-mm, HEDP, BDM, (DODAC 1340-HA08)

Figure 3-75. Ammunition layout in an A-7A cargo sling or an A-21 cargo bag for high-velocity airdrop

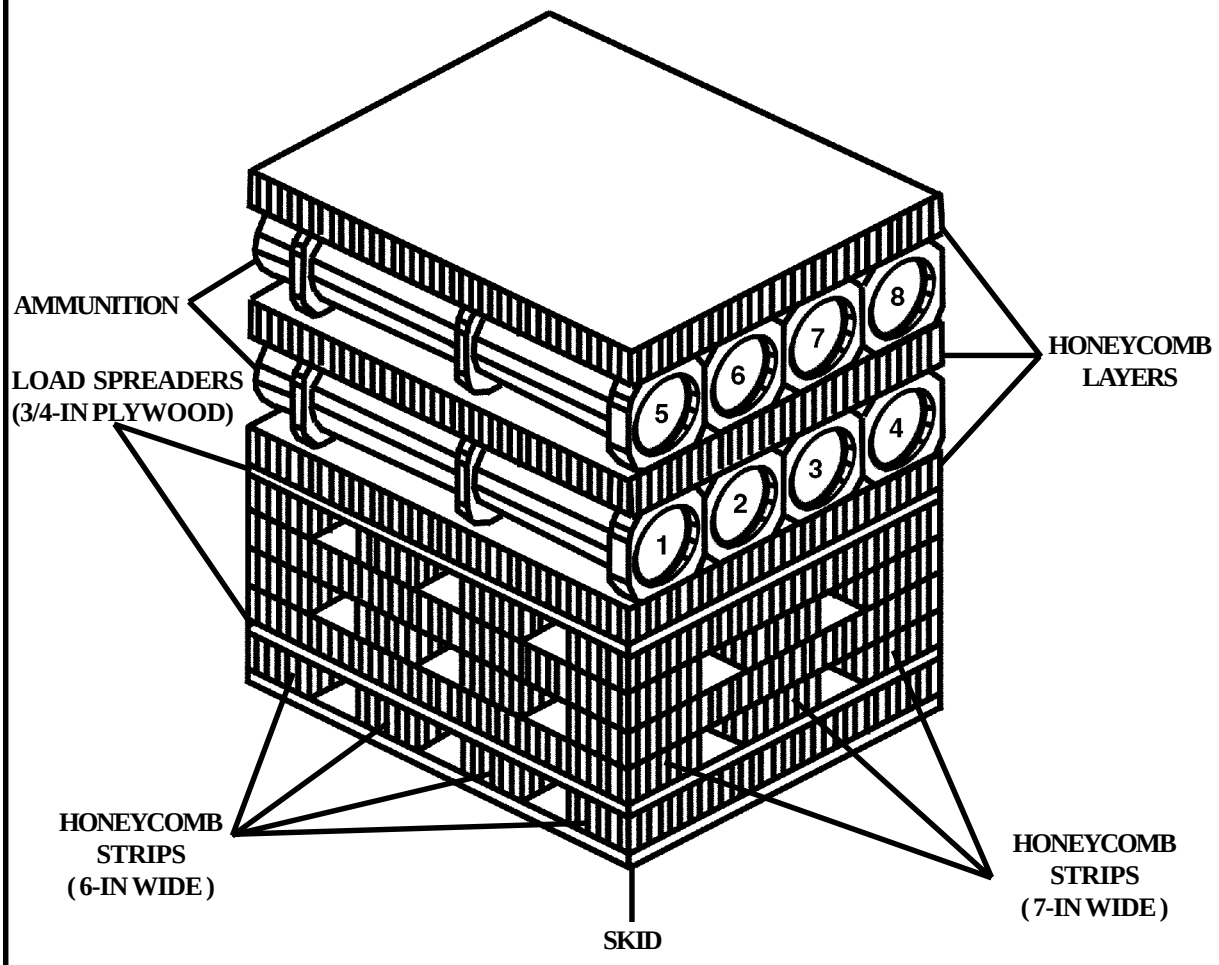

The following ammunition items are rigged in an A-7A cargo sling or an A-21 cargo bag for high-velocity airdrop as shown in Figure 3-76.

Demolition Item

Demolition Kit, Fighting Position Excavator, M300, (DODAC 1340-HA08)

Figure 3-76. Ammunition layout in an A-7A cargo sling or an A-21 cargo bag for high-velocity airdrop

CAUTIONS

1. **The suspended weight of this load must be between 295 pounds and 305 pounds.**
2. **The ballast used in the BCC must be contained (i.e. tied sandbags) so it does not leak outside of the BCC.**

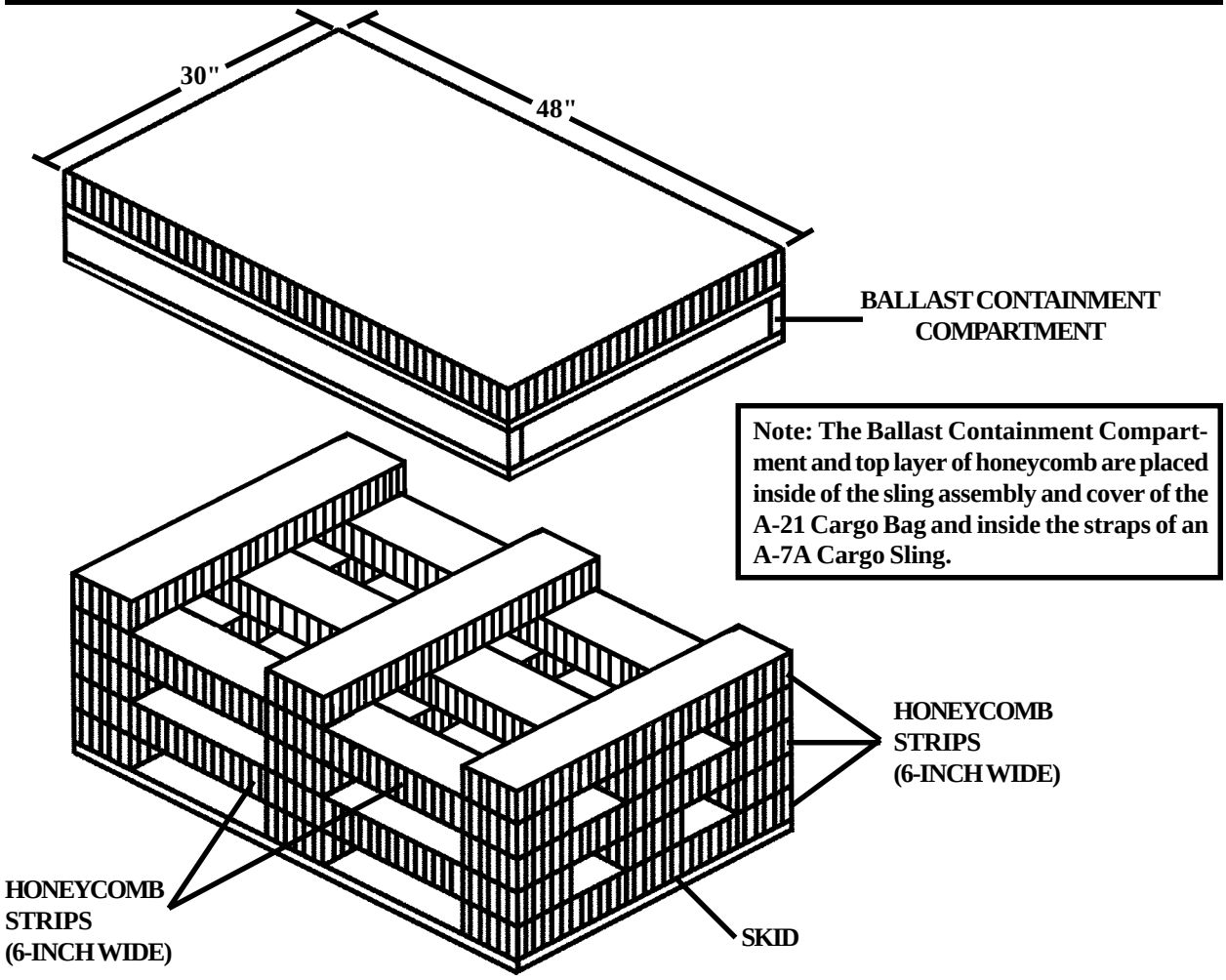

RIGGING STEPS

1. Build the Ballast Containment Compartment (BCC) using two pieces of 2-inch X 4-inch X 48-inch lumber, two pieces of 2-inch X 4-inch X 27-inch lumber, and two pieces of 30-inch X 48-inch X 3/4-inch plywood. Do not nail the top piece of plywood until after the ballast has been added. The weight of the BCC is approximately 56 pounds.

2. The combined weight of the BCC, Ballast, and the Modernized Demolition Initiator (MDI) items must be between 295 and 305 pounds.

Figure 3-77. Honeycomb stack and rigging steps for MDI munitions in an A-7A cargo sling or an A-21 cargo bag for high velocity airdrop

3. Weigh the MDI items, add 56 pounds (weight of the BCC), subtract this sum from 300. This figure is the amount of ballast weight that must be added in the BCC. Evenly distribute the ballast in the BCC and fill all empty spaces with honeycomb so the ballast does not move. Nail the top on the BCC.

4. Prepare and position the load on the honeycomb stack shown above in accordance with FM 10-500-3, Chapter 4, Section III and Chapter 6, Section III. The following restrictions apply:

a. The containers (wooden crates) may be broken down into smaller packaging units.

(1) Individual corrugated cardboard boxes.
(2) Individual foil wrapped items.
(3) MDI items maybe rigged for airdrop up to their smallest unit of packaging.

b. MDI items in their smallest unit of packaging must be encased in a honeycomb bin. See Appendix B for fabrication of honeycomb bins.

c. No container may be rigged on top of a honeycomb bin except another honeycomb bin.

d. Only honeycomb bins and corrugated cardboard boxes may be rigged on top of corrugated cardboard boxes.

e. Wooden crates can only be stacked on top of other wooden crates.

f. Corrugated cardboard boxes containing spools of shock tubing (M12, M13) must be positioned so the spools are lying flat on their base.

5. Center the load on the A-22 container. Place honeycomb on all four sides of the bundle and secure the honeycomb with Type III nylon cord. Place a piece of honeycomb over the top of the load and position a piece of 3/4-inch plywood on top of the honeycomb. Close and secure the A-22 container.

The following munition items are rigged in an A-7A cargo sling or an A-21 cargo bag for high-velocity airdrop as shown in Figure 3-77.

Modernized Demolition Initiators

Holder, Blasting Cap, M9, (DODAC 1375-ML45)
Cap, Blasting, Nonelectric, 30 foot Shock Tube, M11 (1.4B), (DODAC 1375-ML47)
Cap, Blasting, Nonelectric, 500 foot Shock Tube, M12 (1.4S), (DODAC 1375-MN02)
Cap, Blasting, Nonelectric, 1000 foot Shock Tube, M13 (1.4S), (DODAC 1375-MN03)
Cap, Blasting, Nonelectric, Delay, M14 (1.4S), (DODAC 1375-MN06)
Cap, Blasting, Nonelectric, Delay, M15, (DODAC 1375-MN07)
Ignitor, Time Blasting Fuze, M81, with Shock Tube Capability (1.4S), (DODAC 1375-MN08)

Figure 3-77. Honeycomb stack and rigging steps for MDI munitions in an A-7A cargo sling or an A-21 cargo bag for high velocity airdrop (continued)

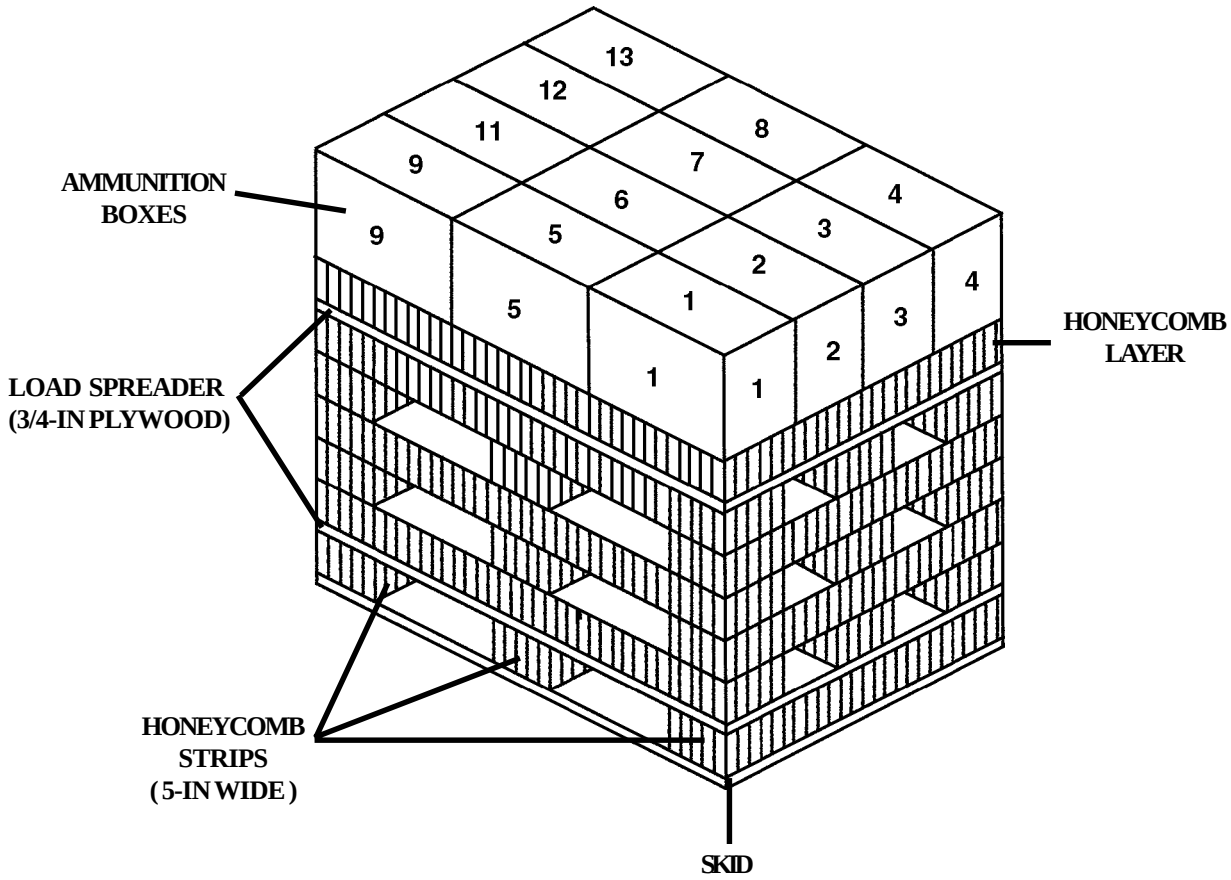

The following ammunition items are rigged in an A-7A cargo sling or an A-21 cargo bag for high-velocity airdrop as shown in Figure 3-78.

155-Millimeter Ammunition

Fuze, Delay, Mod 1, PD, Mk399, (DODAC 1390-N659)

Figure 3-78. Ammunition layout in an A-7A cargo sling or an A-21 cargo bag for high-velocity airdrop

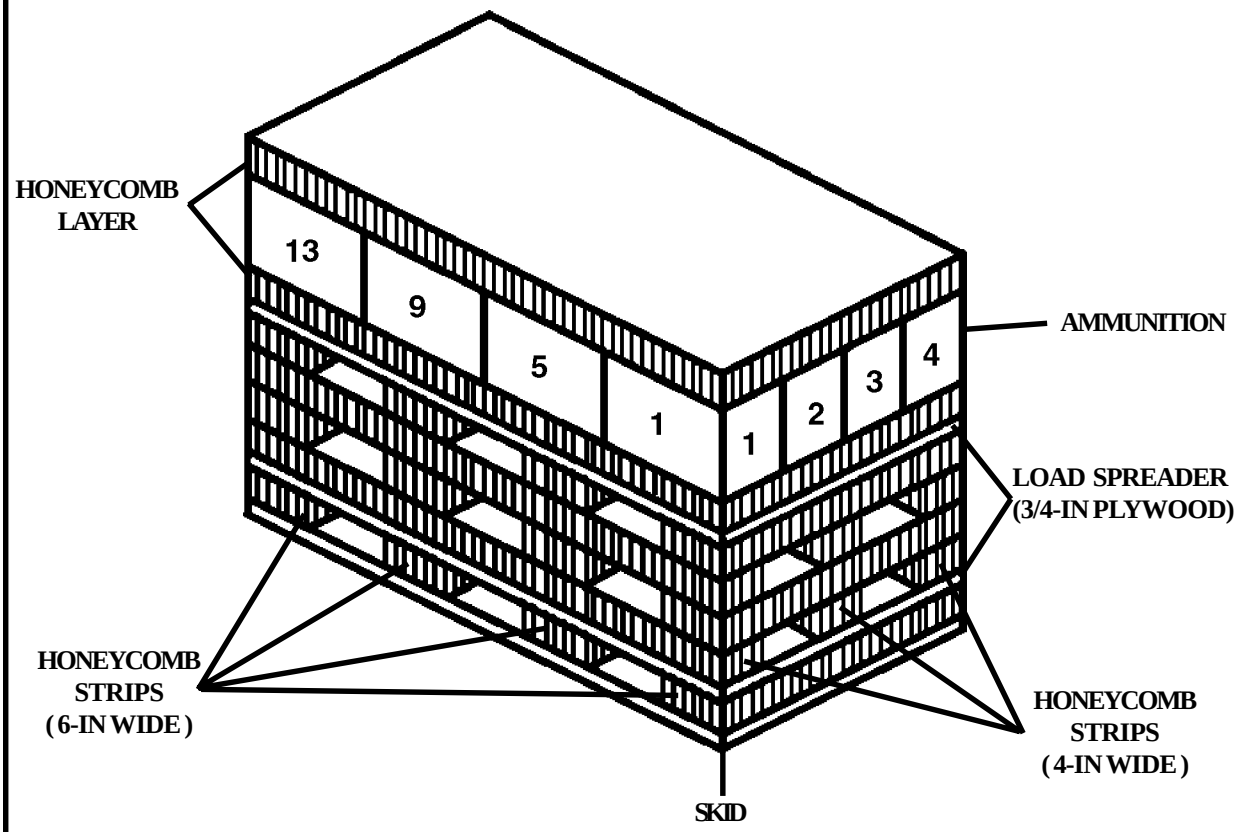

The following ammunition items are rigged in an A-7A cargo sling or an A-21 cargo bag for high-velocity airdrop as shown in Figure 3-79.

Grenades

Grenade, Discharger, Anti-Riot, Irritant, XL96E1, (DODAC 1330-FZ14)
Grenade, Discharger, Anti-Riot, Irritant, XL97E1, (DODAC 1330-FZ15)

Figure 3-79. Ammunition layout in an A-7A cargo sling or an A-21 cargo bag for high-velocity airdrop

APPENDIX B

FABRICATION OF HONEYCOMB BINS

1-1. INTRODUCTION

The honeycomb bin is used to airdrop certain certified munitions when they are broken down into smaller units of issue. The munitions are placed into the bin and all unused space is filled with cellulose padding or honeycomb.

1-2. RIGGING THE HONEYCOMB BIN

Rig the honeycomb bin using the procedures shown below.

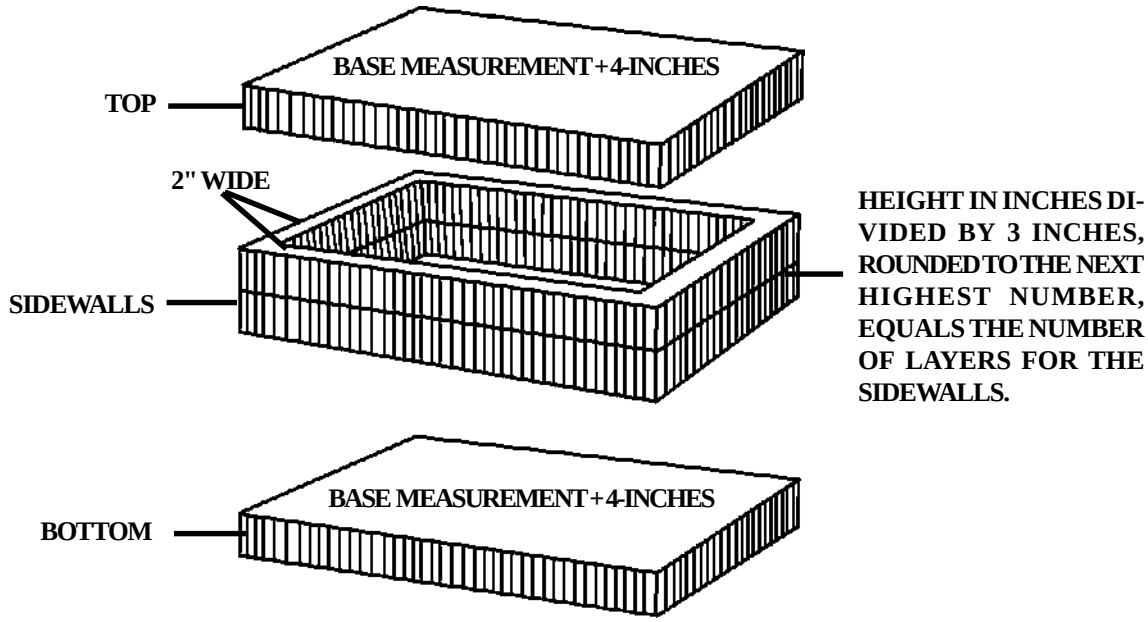

1. Calculate the combined length and width of the base for the items that are to be rigged in the honeycomb bin. Add 4-inches to the length and 4-inches to the width of the base measurement. These are the measurements for the pieces of honeycomb used to make the honeycomb bin (top, bottom, and sidewalls).

2. Measure the combined height of the items that are to be rigged in the honeycomb bin. Divide the height in inches by 3 inches. Round off any fraction or remainder to the next highest number. This is the number of layers required for the honeycomb bin sidewalls.

3. Draw a line 2-inches from each side of the sidewalls. Remove the honeycomb rectangle formed by the drawn lines. This leaves a 2-inch wide rim on the sidewalls.

4. Glue the sidewall layers together. Place the sidewalls on the bottom layer of honeycomb.

5. Position and pad the munitions inside the bin. Fill all empty areas with honeycomb or cellulose padding.

6. Place the top on the bin and secure the top and bottom with type III nylon cord. Tape the edges of the bin where necessary to prevent the type III nylon cord from cutting into the honeycomb.

Honeycomb Bin

GLOSSARY

A/C or acft	**aircraft**
ADAM	**area denial artillery munition**
AFB	**Air Force Base**
AFR	**Air Force regulation**
AFTO	**Air Force technical order**
AP	**armor-piercing**
APC-T	**armor-piercing capped tracer**
APDS-T	**armor-piercing discarding sabot—tracer**
APERS	**antipersonnel**
APERS-T	**antipersonnel—tracer**
APFSDS-T	**armor-piercing fin-stabilized discarding sabot—tracer**
API	**armor-piercing incendiary**
API-T	**armor-piercing incendiary—tracer**
AR	**armor**
ARNG	**Army National Guard**
AT	**antitank**
attn	**attention**
auto	**automatic**
bal	**balance**
BBC	**ballast container compartment**
BD	**base detonating**
BDM	**bunker defeat munition**
cal	**caliber**
comp	**composite**
CRR	**complete round rigging**
CS	**chlorobenzaylmalononitrile**
CTN	**carton**
CVR	**centerline vertical restraint**
DA	**Department of the Army**
DC	**District of Columbia**

DD	Department of Defense
DODAC	Department of Defense Ammunition Code
EOD	explosive ordnance disposal
FM	field manual
ft	foot
gal	gallon
GB	green bag
GRD	ground
HC	hexachloroethane zine
HE	high explosive
HE-T	high explosive—tracer
HEAT	high-explosive antitank
HEAT-MP	high-explosive antitank-multipurpose
HEAT-MP-T	high-explosive antitank-multipurpose—tracer
HEAT-SD	high-explosive antitank-self-destruct
HEAT-T	high-explosive antitank—tracer
HEDP	high explosive dual purpose
HEI	high-explosive incendiary
HEI-T	high-explosive incendiary—tracer
HEI/TP-T	high explosive incendiary-target practice—tracer
HEI-T-SD	high-explosive incendiary—tracer self-destruct
HEP-T	high-explosive plastic tracer
HERA	high-explosive rocket assisted
HQ	headquarters
ICM	improved conventional munition
in	inch
lb	pound
mg	machine gun
MDI	modernized demolition initiator
MICLIC	mine clearing line charge
mm	millimeter
mod	model

msl	missile
MT	mechanical time
MTSQ	mechanical time, superquick
NALC	Navy Ammunition Logistics Code
NATO	North Atlantic Treaty Organization
NO	number
NSN	national stock number
PD	point detonating
PETN	pentaerthritoltetranitrate
qty	quantity
RA	Regular Army
RAAM	remote anti-armor mine
RAAMS	remote anti-armor mine system
RAP	rocket-assisted projectile
rd	round
RQR	required
SD	self-destruct
sec	second
TM	technical manual
TNT	trinitrotoluene
TO	technical order
TOW	tube-launched, optically tracked, wire-guided
TP-T	target practice tracer
TR	tracer
TRADOC	United States Army Training and Doctrine Command
US	United States (of America)
USAR	United States Army Reserve
VA	Virginia
w	with
WB	white bag
WHD	warhead
WP	white phosphorous
WP-T	white phosphorous-tracer