Appendix B

ATACS SIGNAL BRIGADE STRUCTURE

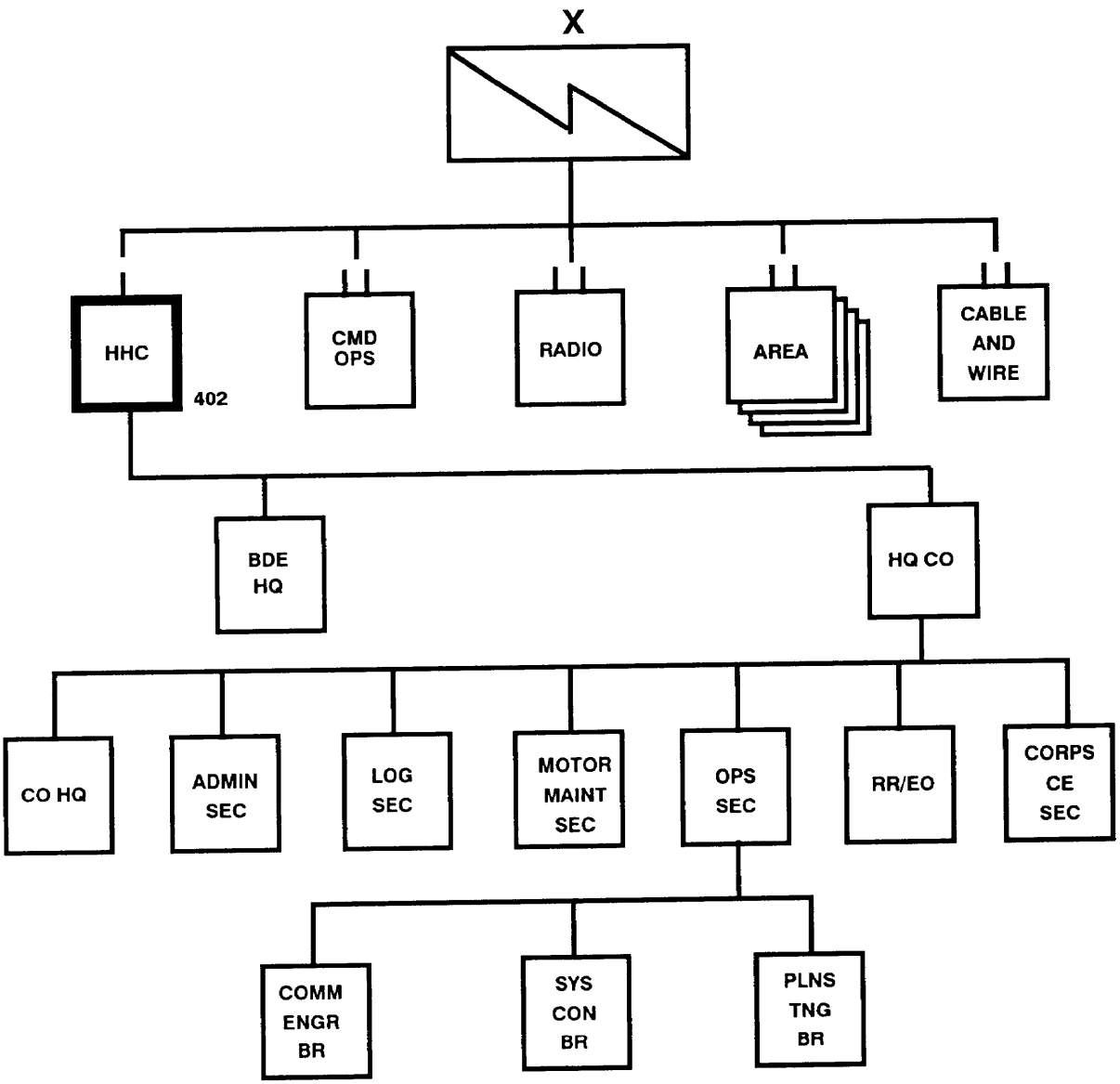

Figure B-1. HHC, corps signal brigade.

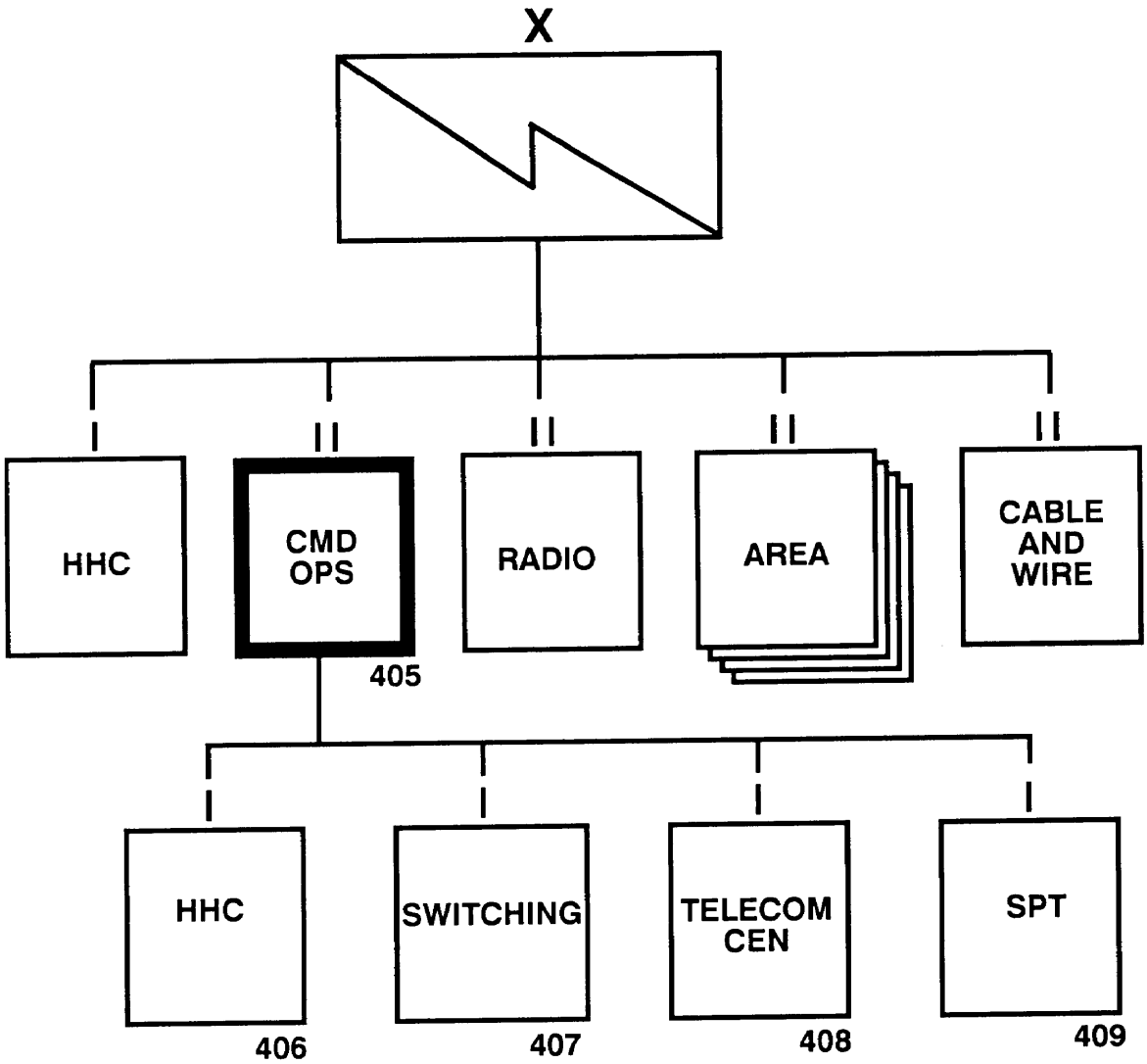

Figure B-2. Corps, command operations battalion.

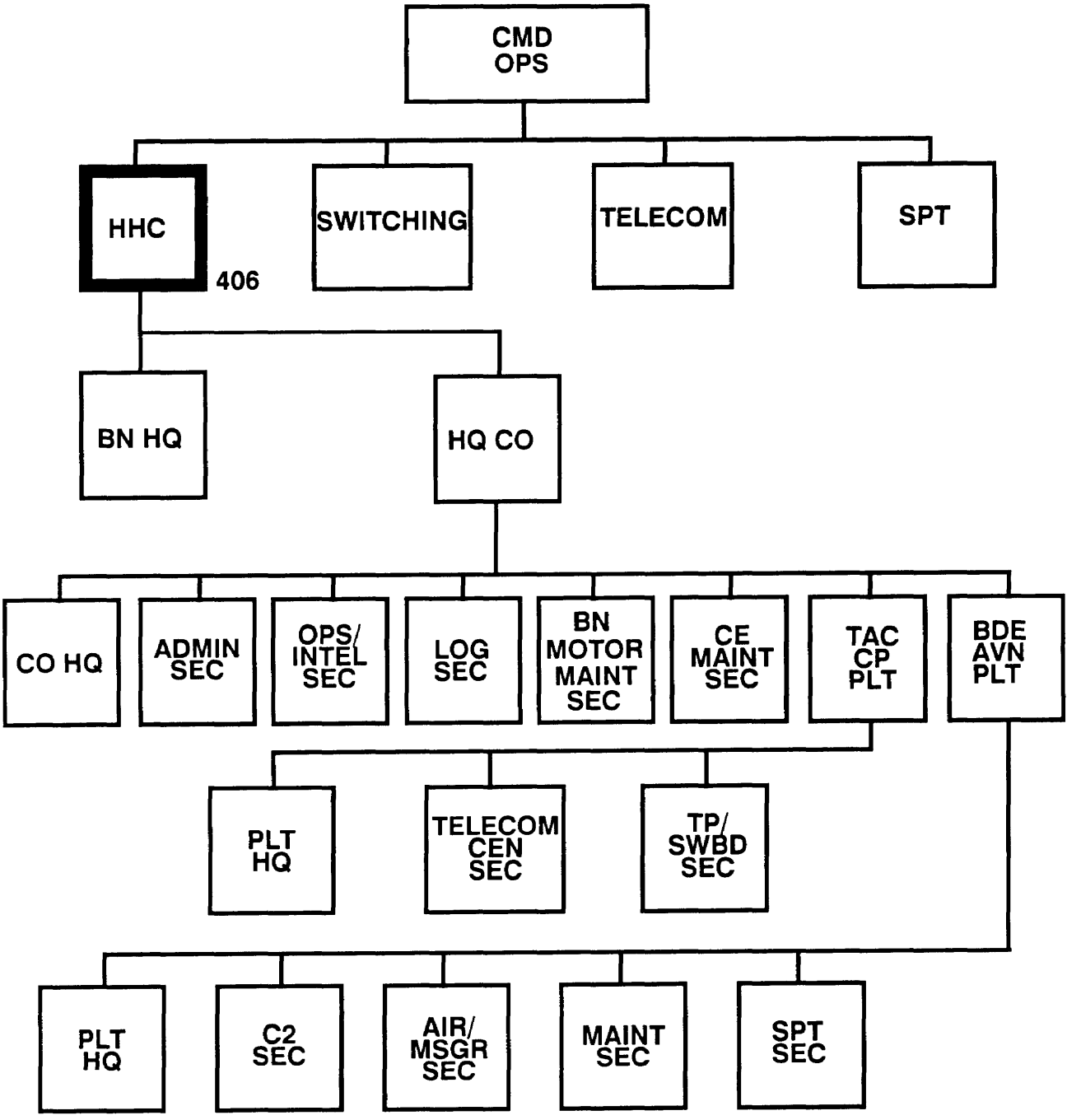

Figure B-3. HHC, corps command operations battalion.

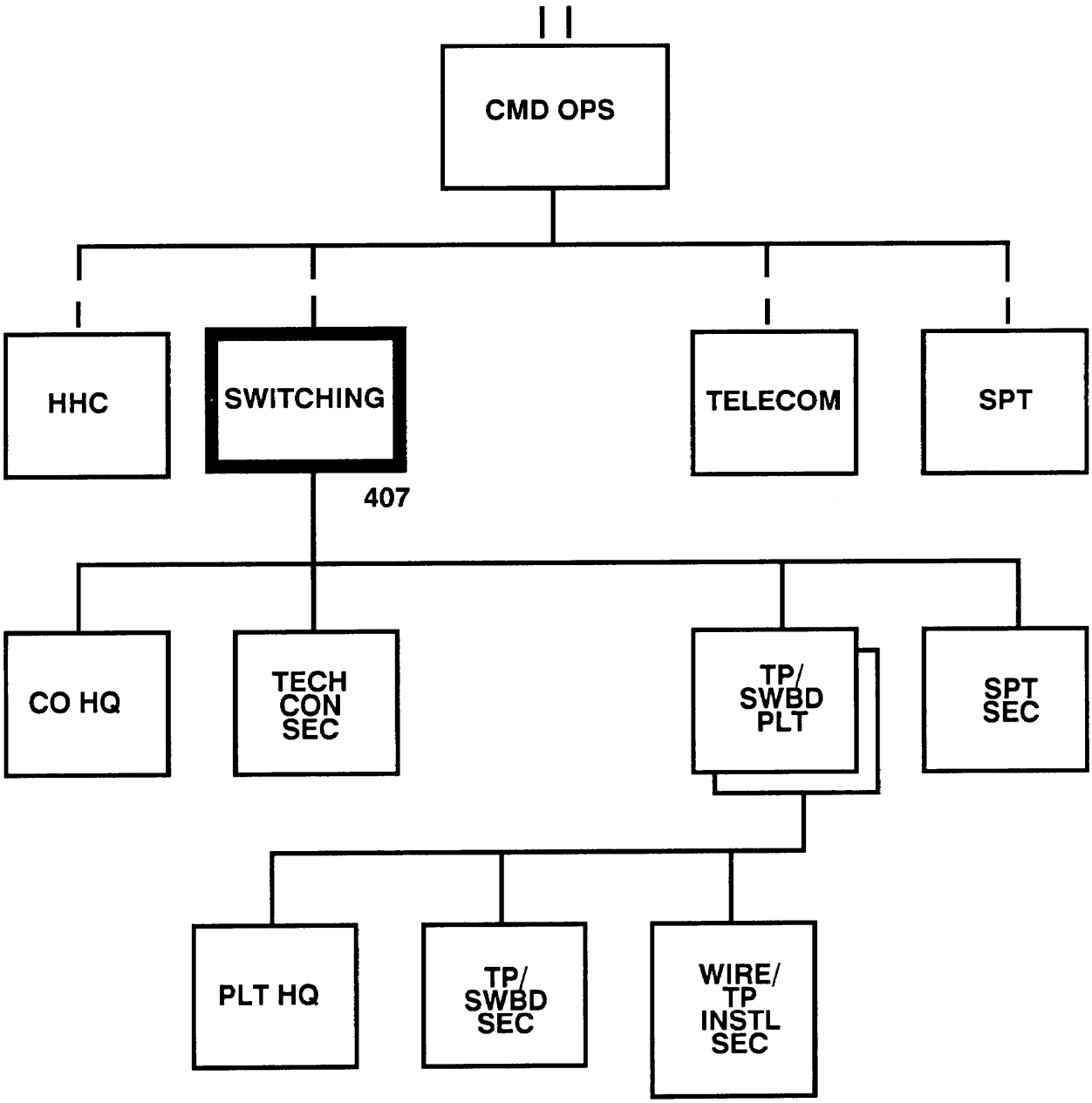

Figure B-4. Switching company, corp command operations battalion.

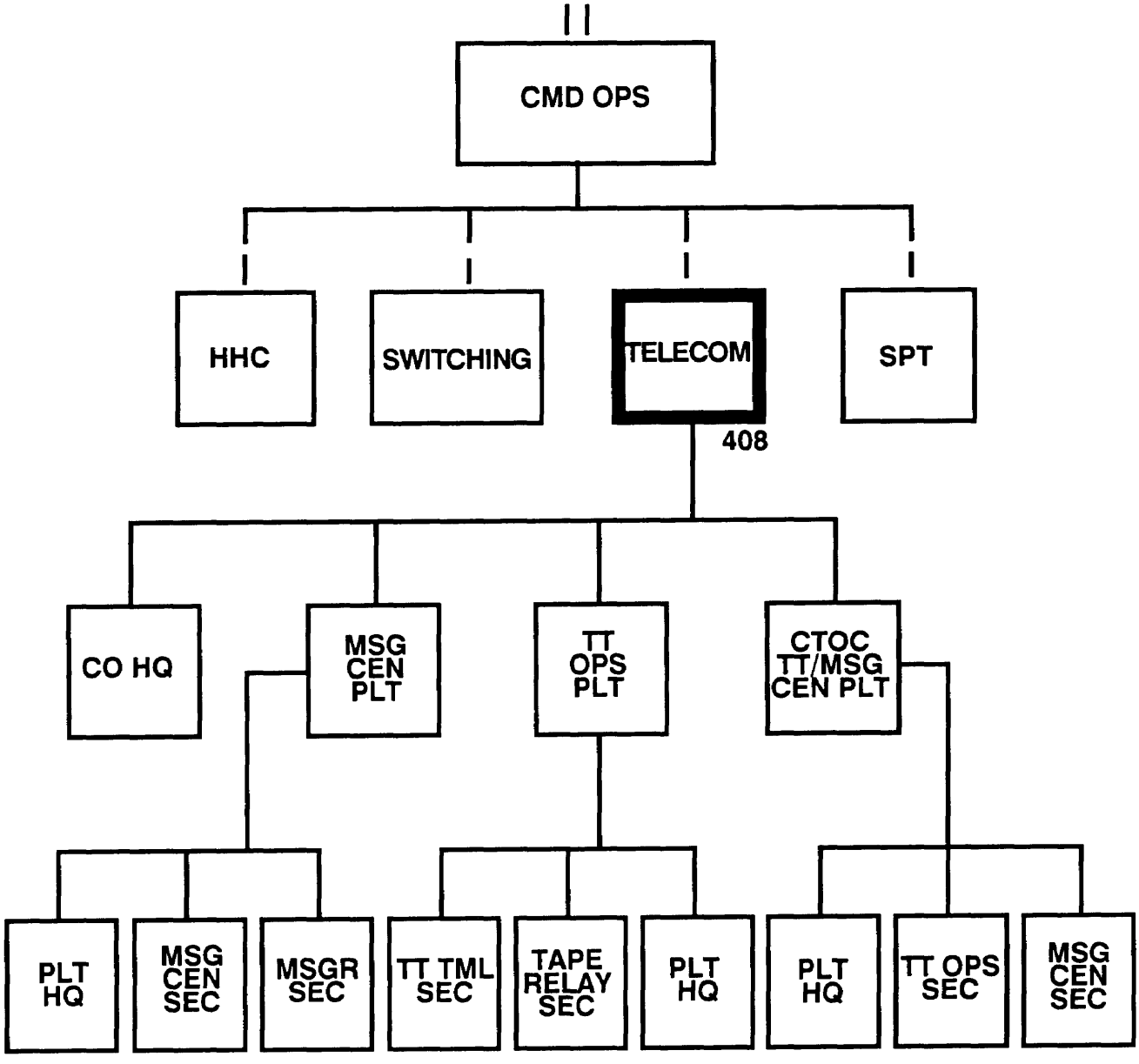

Figure B-5. Telecommunications center company, corps command operations battalion.

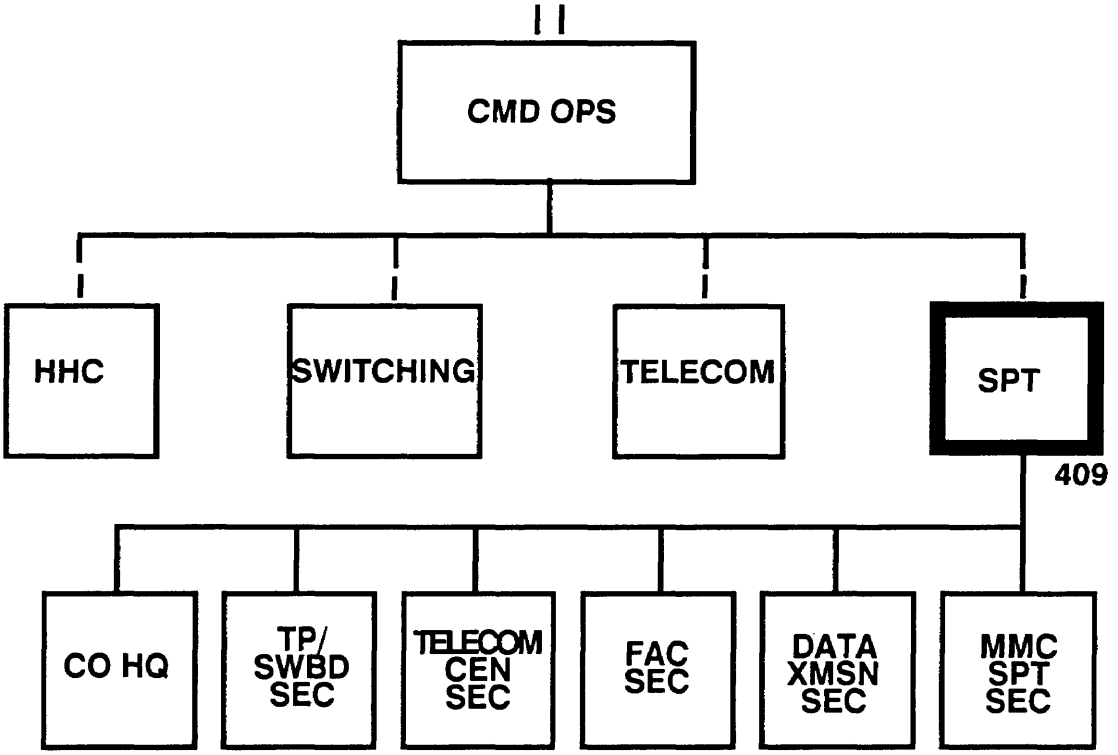

Figure B-6. Support company, corps command operations battalion.

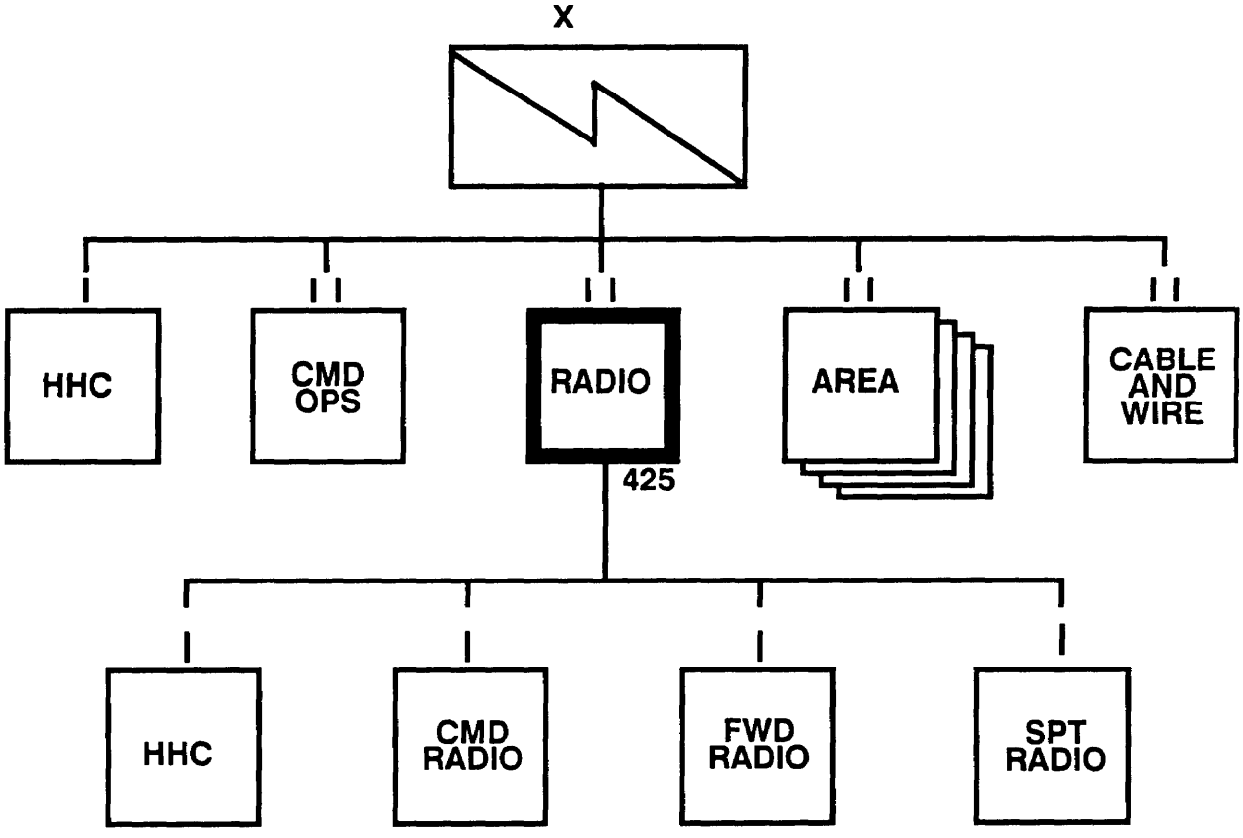

Figure B-7. Corps radio battalion.

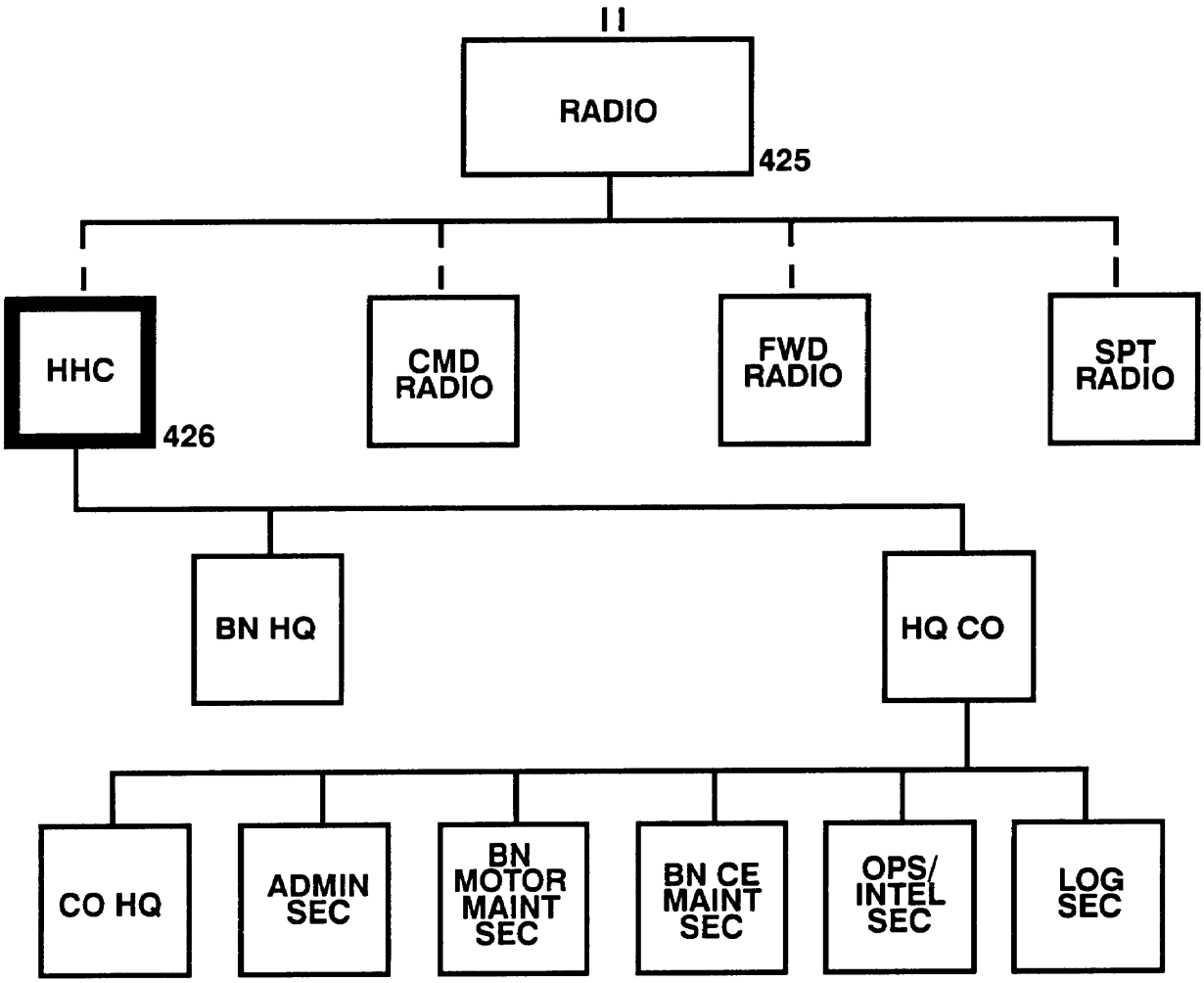

Figure B-8. HHC, corps radio battalion.

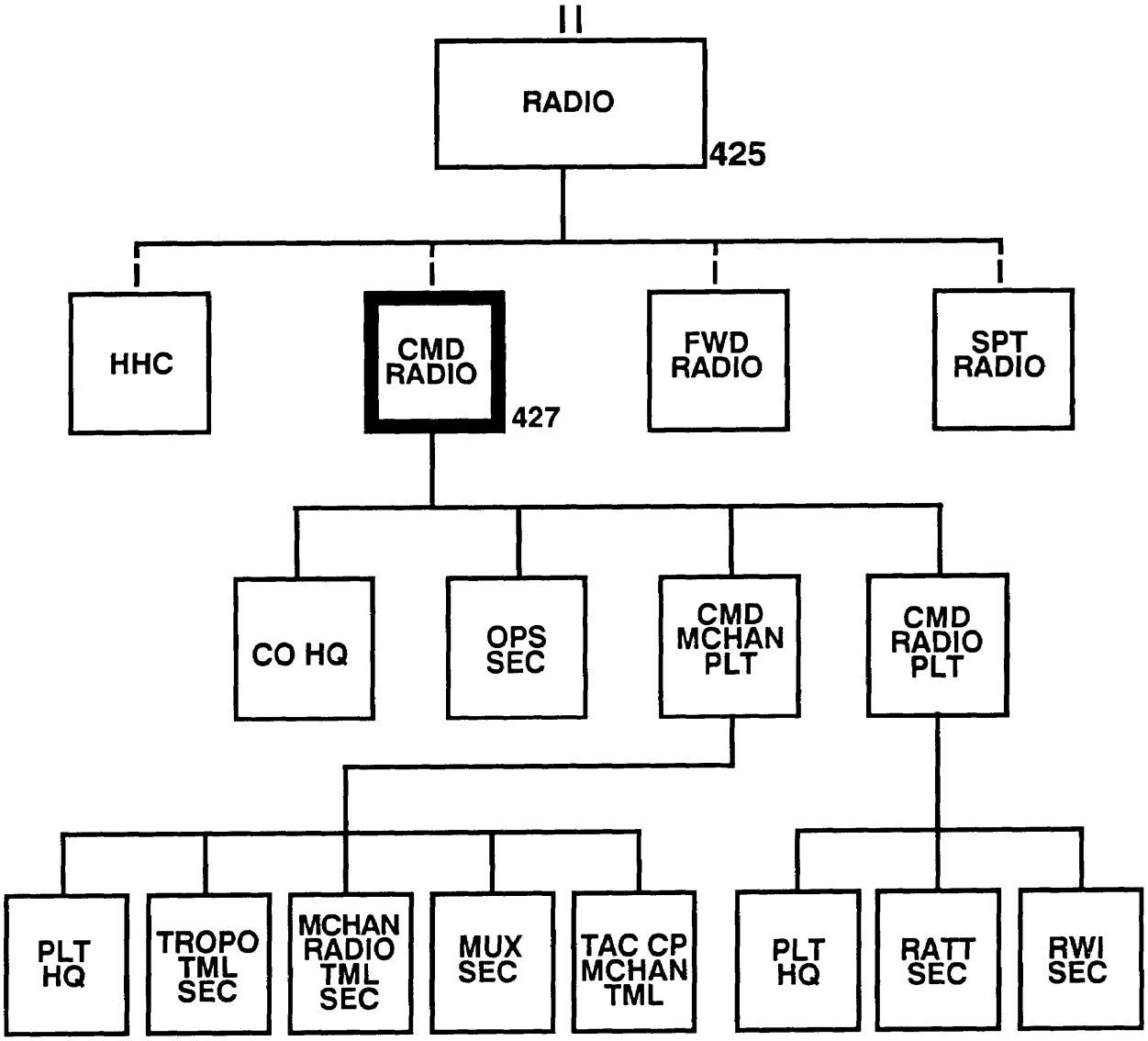

Figure B-9. Command radio company, corps radio battalion.

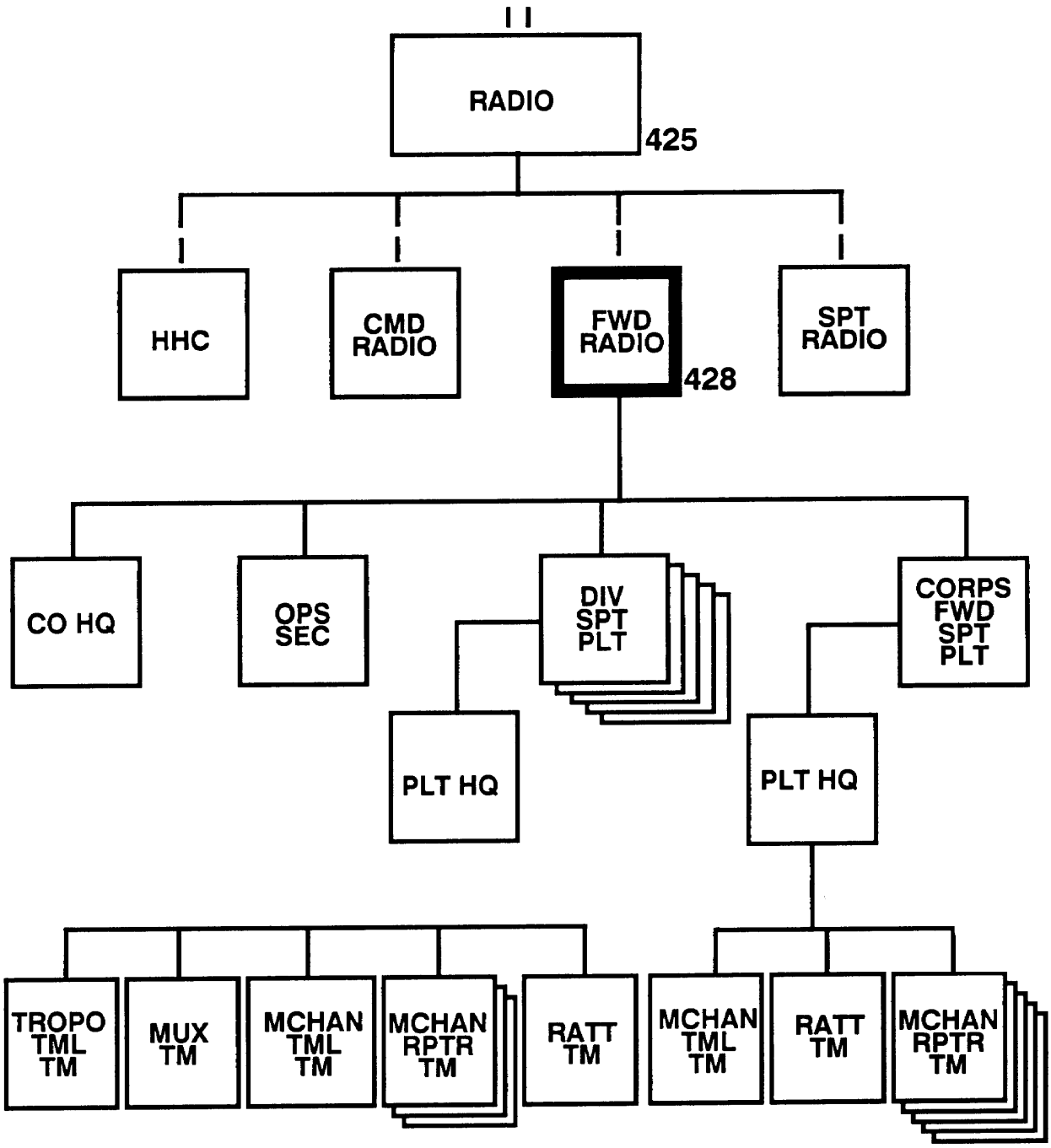

Figure B-10. Forward radio company, corps radio battalion.

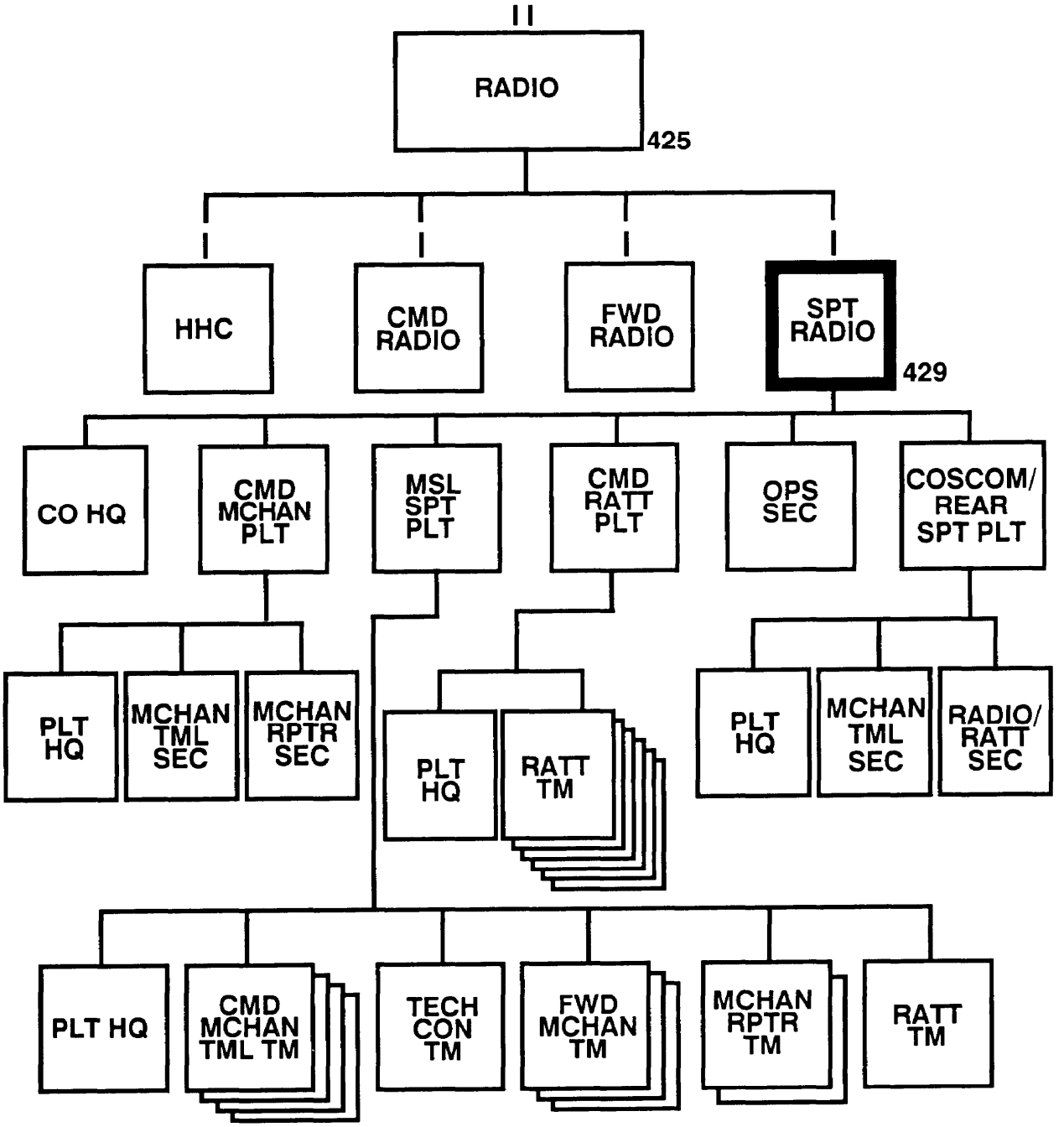

Figure B-11. Support radio company, corps radio battalion.

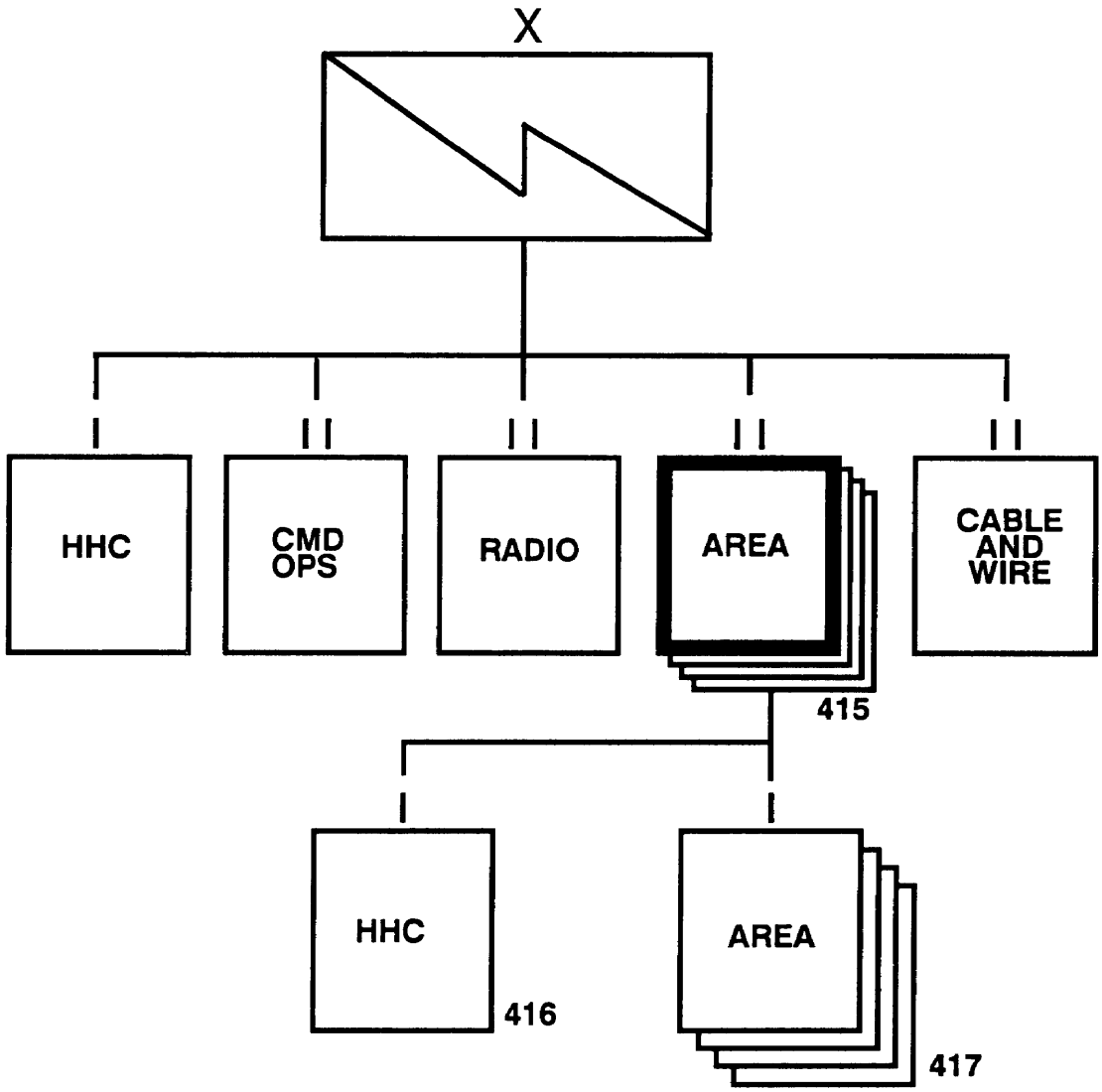

Figure B-12. Corps area signal battalion.

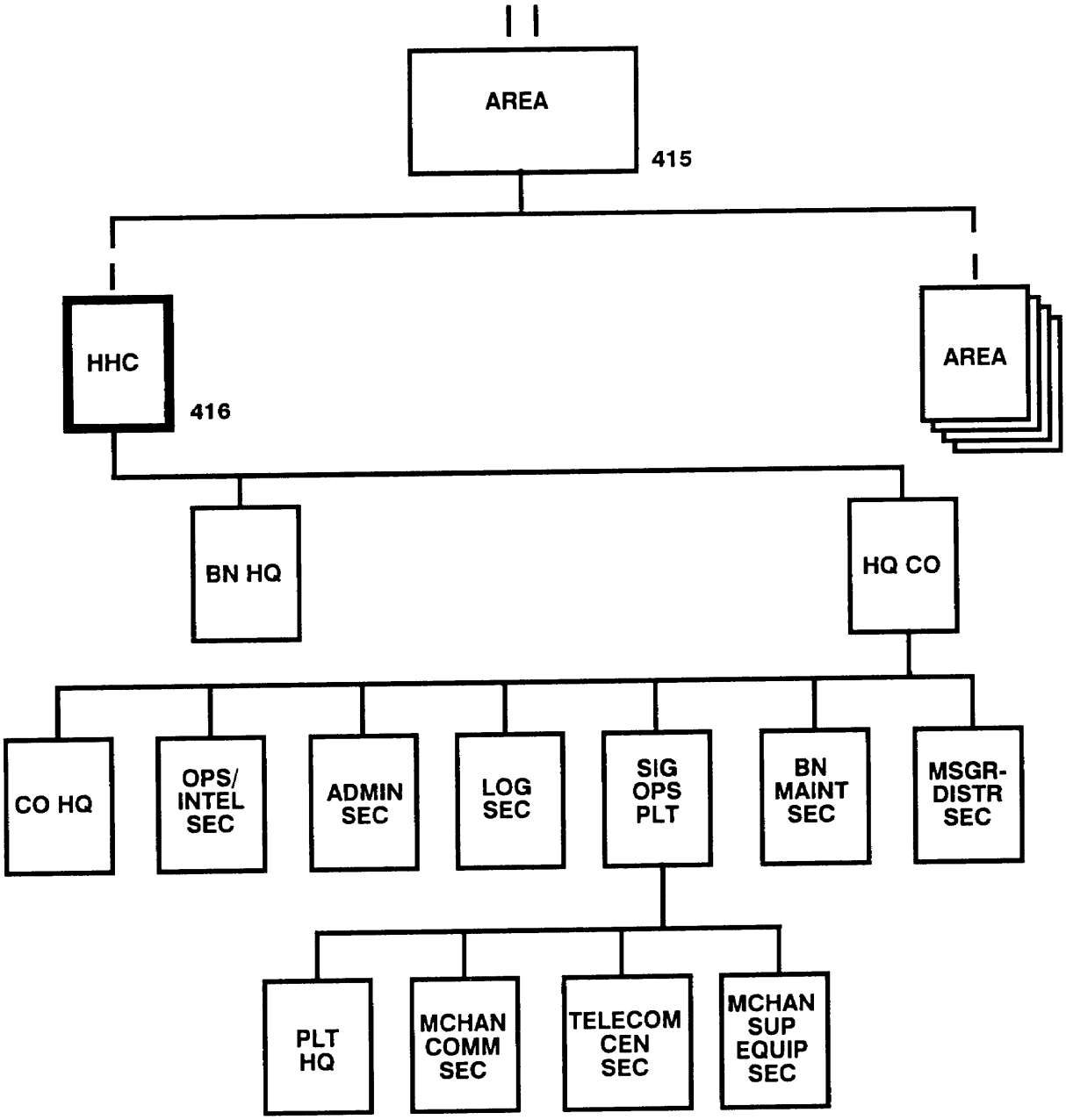

Figure B-13. HHC, corps area signal battalion.

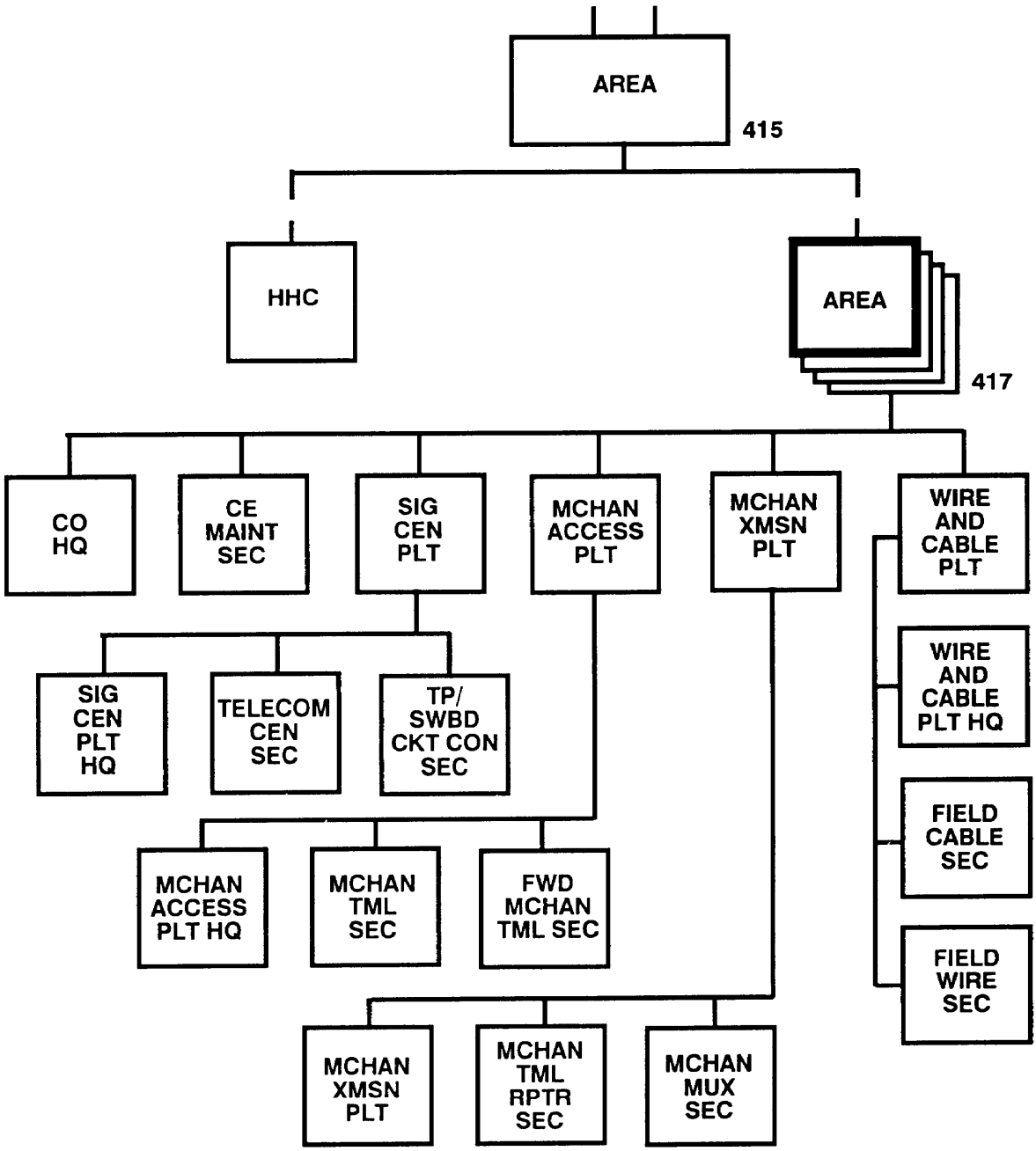

Figure B-14. Corps area signal company, corps area signal battalion.

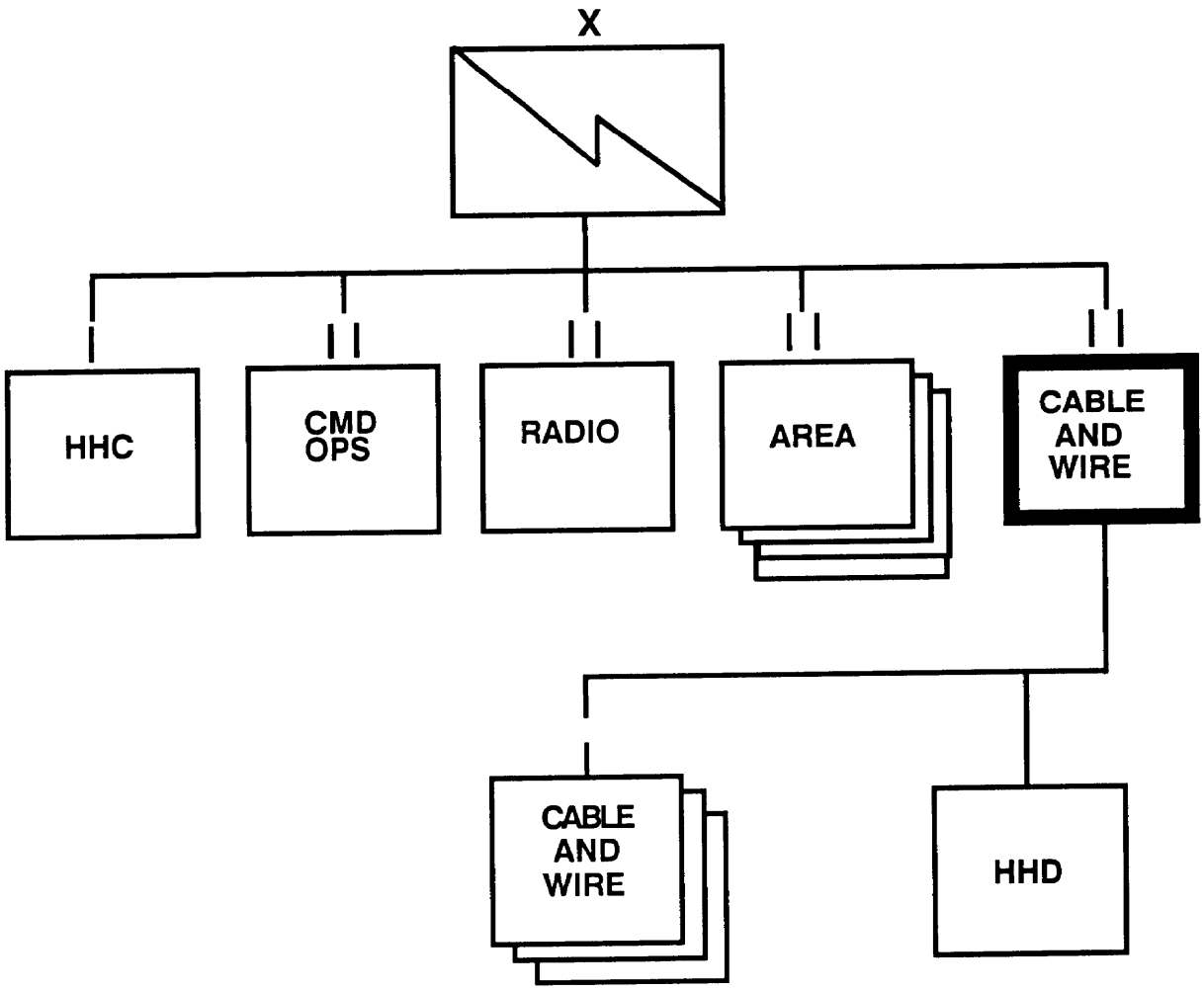

Figure B-15. Corps cable and wire battalion.

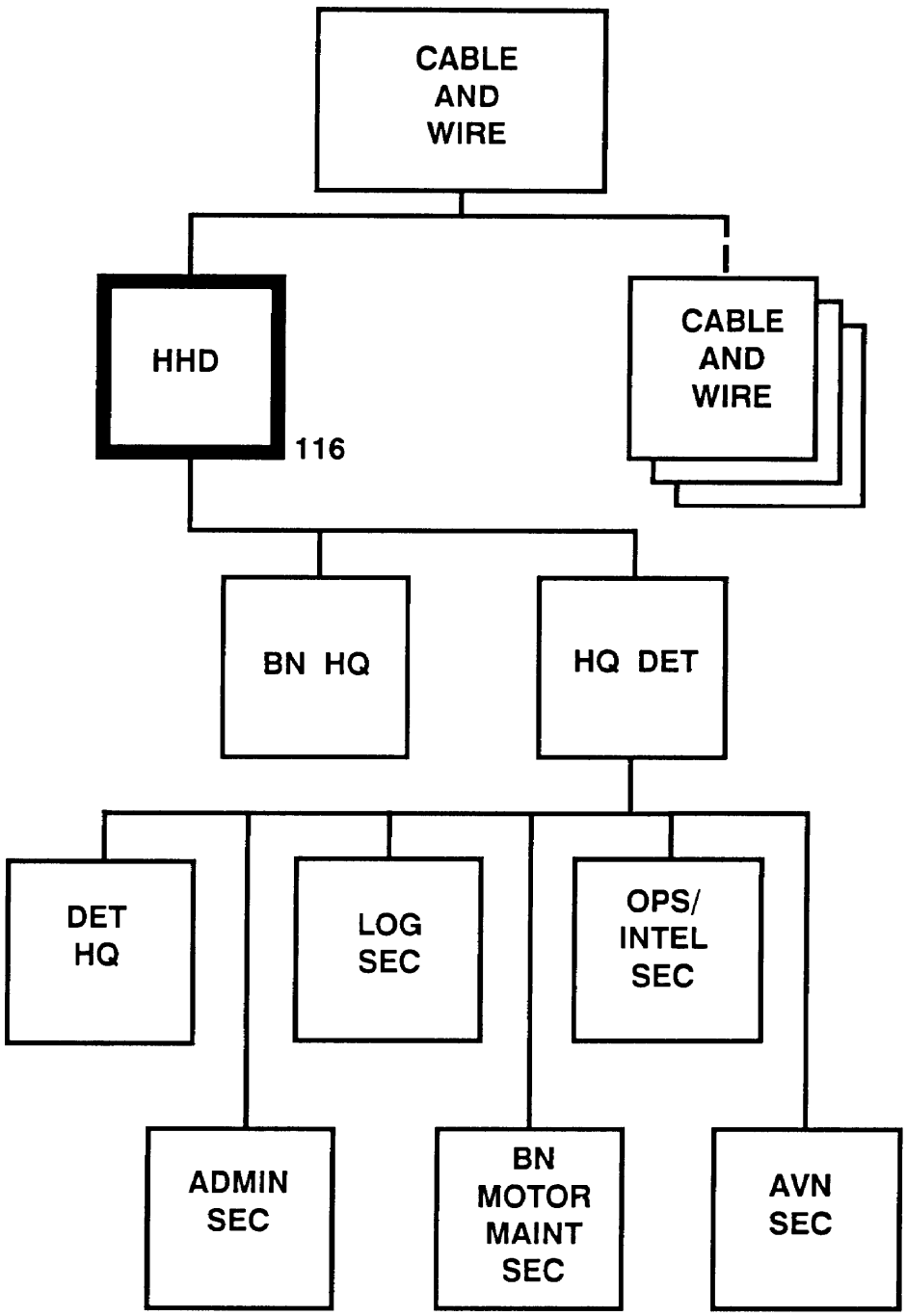

Figure B-16. HHD, corps cable and wire bafttalion.

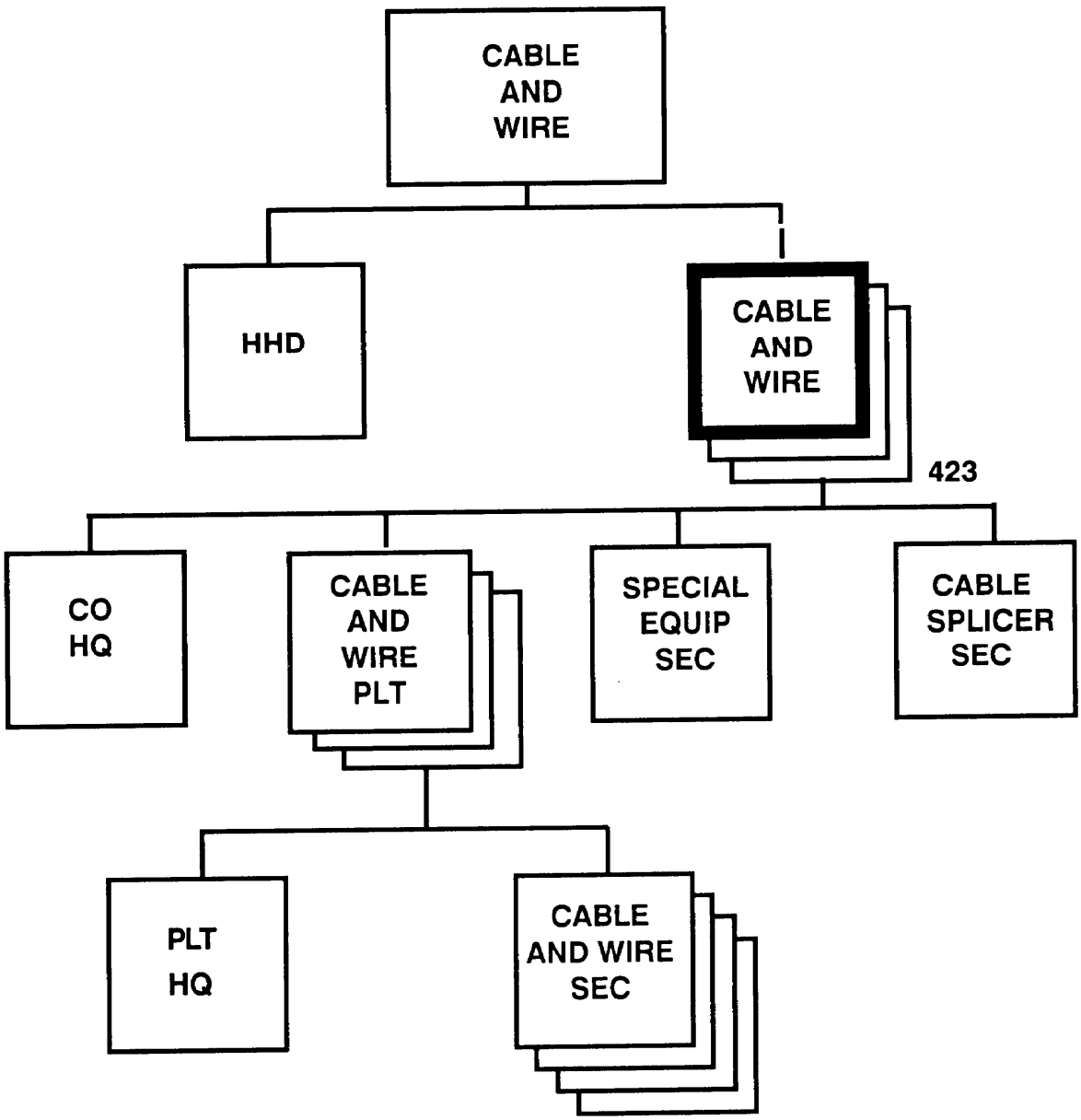

Figure B-17. Cable and wire company, corps cable and wire battalion.