Chapter 10

Targets and Target Mechanisms

The targets and activating mechanisms in this chapter are used on the scaled ranges described in TC 25-8, *Training Ranges* and with the tank gunnery tables in FM 17-12-1-2, *Tank Gunnery (Abrams)*.

Full-Scale Targets

Full-scale targets are used for tactical and gunnery training on armor and infantry gunnery ranges. They are classified into three major gunnery engagement categories:

- The heavy (H) target designator is for threat targets engaged with the main gun or tube-launched, optically tracked, wire-guided (TOW) missile systems only.
- The medium (M) target designator is for threat tank-like, antitank, and antiaircraft vehicles and personnel carriers. These are normally engaged with selected main gun, TOW, 25-mm, or caliber .50 weapon systems.
- The light (L) target designator is primarily for light infantry vehicles, trucks, antitank guns, and personnel targets engaged with 25-mm, caliber .50, or 7.62-mm weapon systems.

The additional target designator for thermal (T) indicates the recommended placement of thermal panels on the targets. When used as indicated, these panels closely represent the thermal signature of a particular threat vehicle as viewed through thermal sighting systems. Several of these targets have replaced the standard NATO targets.

FULL-SCALE TARGET DESIGNATORS		
Target	**Standard**	**NATO**
T-64/T-72 Front	H-1	70
T-64/T-72 Flank	H-2	58/71
T-64/T-72 Partial Defilade	H-3	60
T-64/T-72 Turret	H-5	-
HIND Front	H-7	-
BMP Front	M-1	59
BMP Flank	M-2	58
BRDM Front	M-5	-
BRDM Flank	M-6	58
ZSU-23/4Front	M-9	-
ZSU-23/4 Flank	M-10	-
BTR Front	M-11	61
BTR Flank	M-6	58
Truck (U-375) Front	L-1	-
Truck (U-375) Flank	L-2	31
BMD Front	L-3	-
BMD Flank	L-4	-
T-12 Antitank Gun Front	L-5	61
Personnel	L-6	E-type
Personnel	L-7	E-type
Personnel	L-8	E-type
Partial Personnel	L-9	F-type
ATGM Team	L-6, L-7, L-9	E-type, F-type
RPG Team	L-6, L-7, L-9	E-type, F-type

Table 10-1. Full-scale target designators.

Units can order the thermal target modules in Figure 10-1 via an open contract with the Project Manager for Training Devices (PM TRADE) at the U.S. Naval Training Center, Orlando, FL. The contract number is N61339-82-D-0010. The address is PM TRADE, ATTN: Code 632, U.S. Naval Training Center, Orlando, FL 38213-7100.

All orders must include the part number and quantity of each module required and the part number of the proper harness to connect the modules.

Note. A specific contract has not been awarded to supply thermal targets to the U.S. Army.

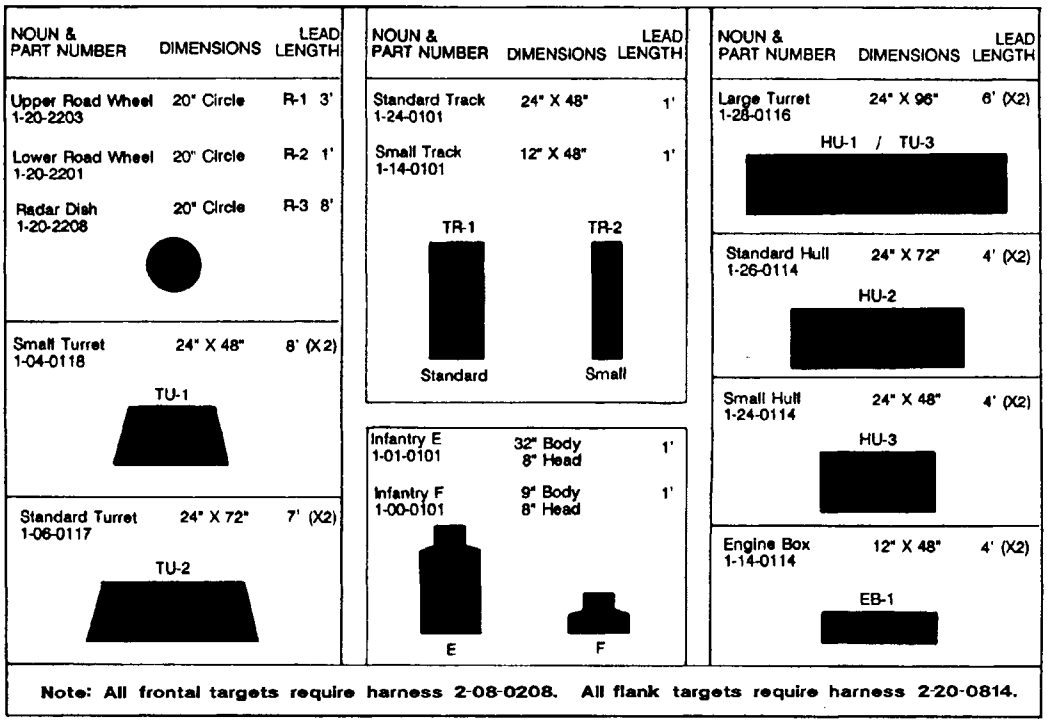

Figure 10-1. Thermal target module ordering information.

The full-scale targets in this section are easily adapted to smaller scale versions by using the conversion chart below the diagram of each target (see Figures 10-2 through 10-18).

All measurements in inches are rounded off to the nearest 1/10-inch. Use the chart below to round the decimal fraction to the nearest 1/16 inch for construction purposes.

FRACTION-TO-DECIMAL CONVERSION CHART			
1/16 = .0625	5/16 = .3125	9/16 = .5625	13/16 = .8125
1/8 = .125	3/8 = .375	5/8 = .625	7/8 = .875
3/16 = .1875	7/16 = .4375	11/16 = .6875	15/16 = .935
1/4 = .25	1/2 = .50	3/4 = .75	1 = 1.0

Table 10-2. Fraction-to-decimal conversion chart.

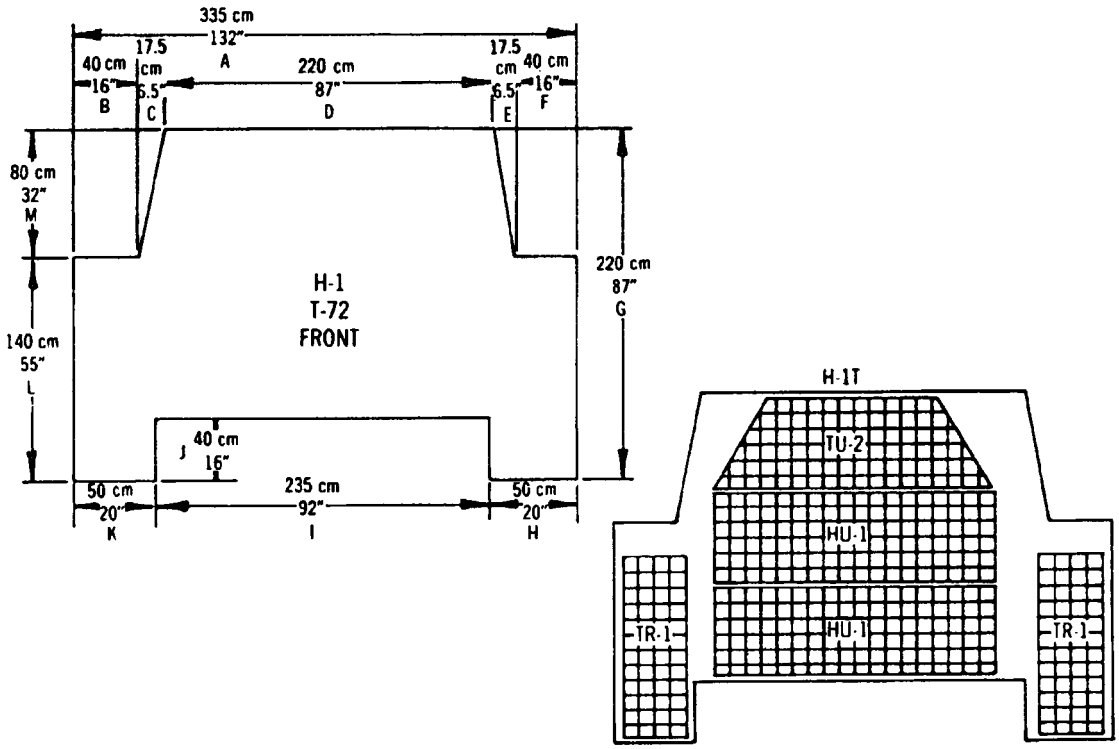

SCALE	In/cm	A	B	C	D	E	F	G	H	I	J	K	L	M
1:1	in	132	16	16.5	87	6.5	16	87	20	92	16	20	55	32
	cm	335	40	17.5	220	17.5	40	220	50	235	40	50	140	80
1:2	in	66	8	3.25	43.5	3.25	8	43.5	10	46	8	10	27.5	16
	cm	167.5	20	8.75	110	8.75	20	110	25	117.5	20	25	70	40
1:5	in	26.4	3.2	1.3	17.4	1.3	3.2	17.4	4	18.4	3.2	4	11	6.4
	cm	67	8	3.5	44	3.5	8	44	10	47	8	10	28	16
1:10	in	13.2	1.6	0.7	8.7	0.7	1.6	8.7	2	9.2	1.6	2	5.5	3.2
	cm	33.5	4	1.8	22	1.8	4	22	5	23.5	4	5	14	8

Figure 10-2. H-1 and conversion chart.

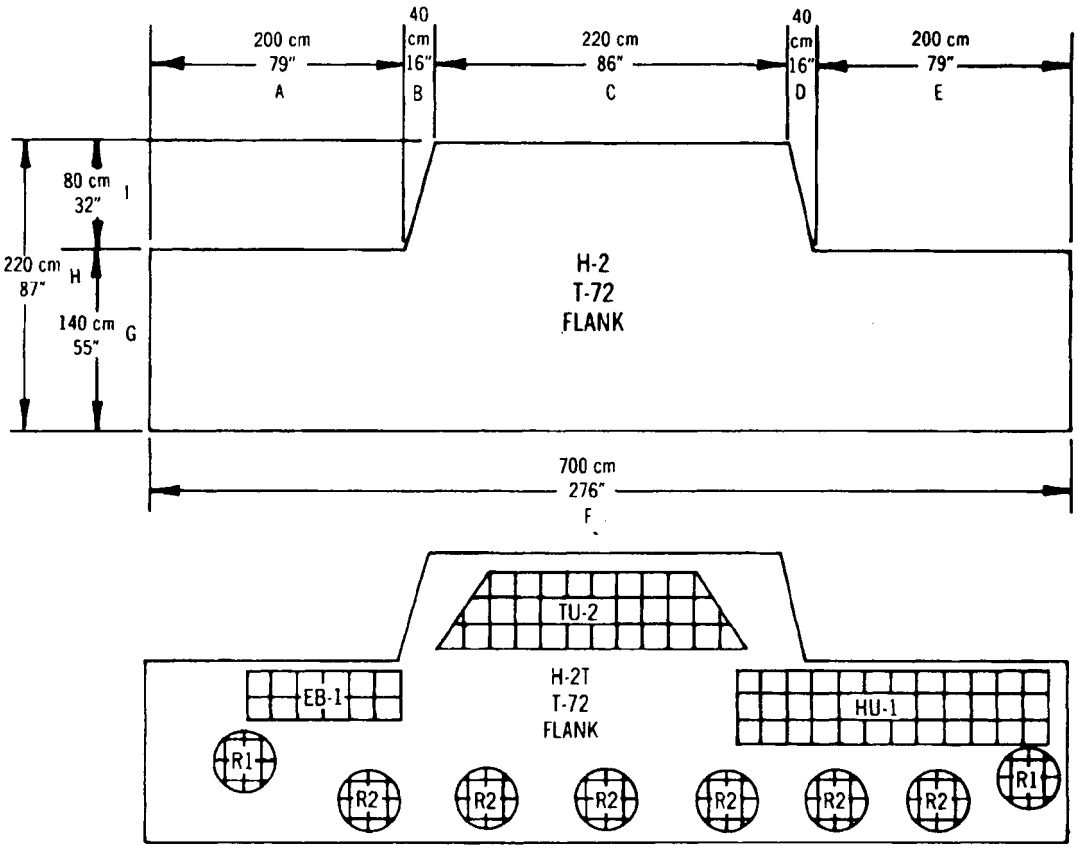

SCALE	In/cm	A	B	C	D	E	F	G	H	I
1:1	in	79	16	87	16	79	276	55	87	32
	cm	200	40	220	40	200	700	140	220	80
1:2	in	39.5	8	43	8	39.5	138	27.5	43.5	16
	cm	100	20	110	20	100	350	70	110	40
1:5	in	15.8	3.2	17.2	3.2	15.8	55.2	11	17.4	6.4
	cm	40	8	44	8	40	140	28	44	16
1:10	in	7.9	1.6	8.6	1.6	7.9	27.6	5.5	8.7	3.2
	cm	20	4	22	4	20	70	14	22	8

Figure 10-3. H-2 and conversion chart.

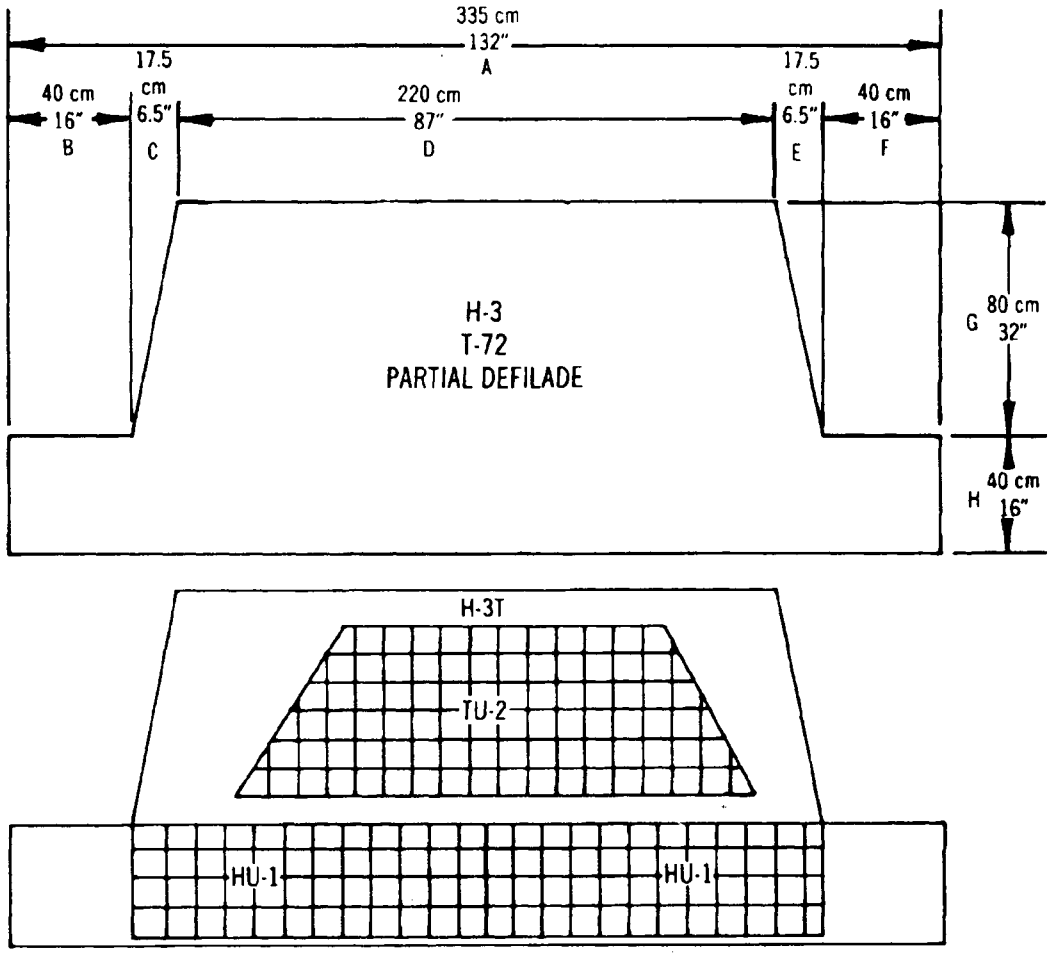

SCALE	In/cm	A	B	C	D	E	F	G	H
1:1	in	132	16	6.5	87	6.5	16	32	16
	cm	335	40	17.5	220	17.5	40	80	40
1:2	in	66	8	3.25	43.5	3.25	8	16	8
	cm	167.5	20	8.75	110	8.75	20	40	20
1:5	in	26.4	3.2	1.3	17.4	1	3.2	6.4	3.2
	cm	67	8	3.5	44	3.5	8	16	8
1:10	in	13.2	1.6	0.7	8.7	0.7	1.6	3.2	1.6
	cm	33.5	4	1.8	22	1.8	4	8	4

Figure 10-4. H-3 and conversion chart.

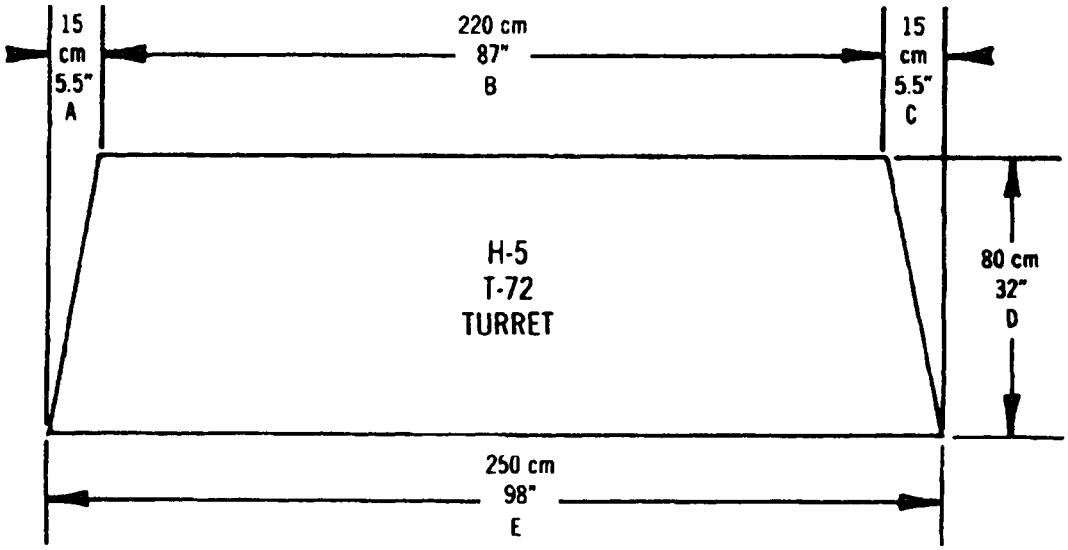

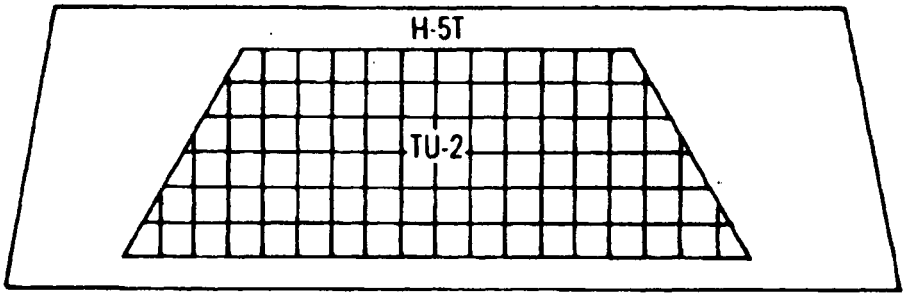

SCALE	In/cm	A	B	C	D	E
1:1	in	5.5	87	5.5	32	98
	cm	15	220	15	80	250
1:2	in	2.5	43.5	2.5	16	49
	cm	7.5	110	7.5	40	125
1:5	in	1.1	17.4	1.1	6.4	19.6
	cm	3	44	3	16	50
1:10	in	0.6	8.7	0.6	3.2	9.8
	cm	1.5	22	1.5	8	25

Figure 10-5. H-5 and conversion chart.

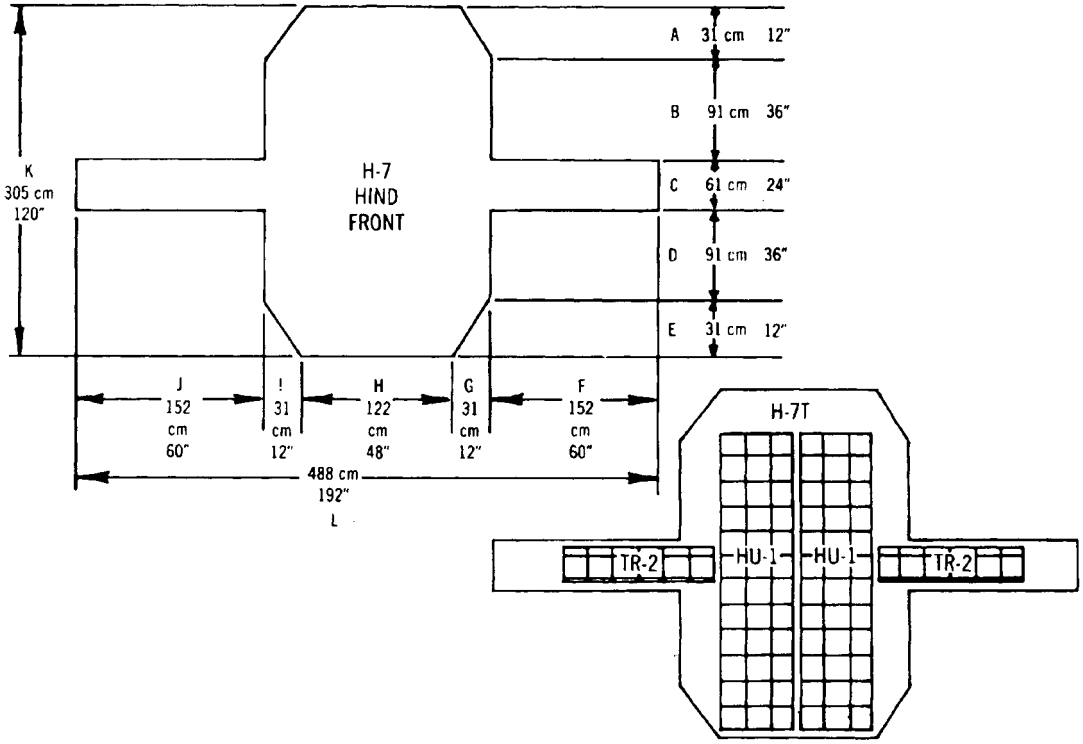

SCALE	In/cm	A	B	C	D	E	F	G	H	I	J	K	L
1:1	in	12	36	24	36	12	60	12	48	12	60	120	192
	cm	31	91	61	91	31	152	31	122	31	152	305	488
1:2	in	6	18	12	18	6	30	6	24	6	30	60	96
	cm	15.5	45.5	30.5	45.5	15.5	76	15.5	61	15.5	76	152.5	244
1:5	in	2.4	7.2	4.8	7.2	2.4	12	2.4	9.6	2.4	12	24	38.4
	cm	6.2	18.2	12.2	18.2	6.2	30.4	6.2	24.2	6.2	30.4	61	89.6
1:10	in	1.2	3.6	2.4	3.6	1.2	6	1.2	4.8	1.2	6	12	19.2
	cm	3.1	9.1	6.1	9.1	3.1	15.2	3.1	12.2	3.1	15.2	30.5	44.8

Figure 10-6. H-7 and conversion chart.

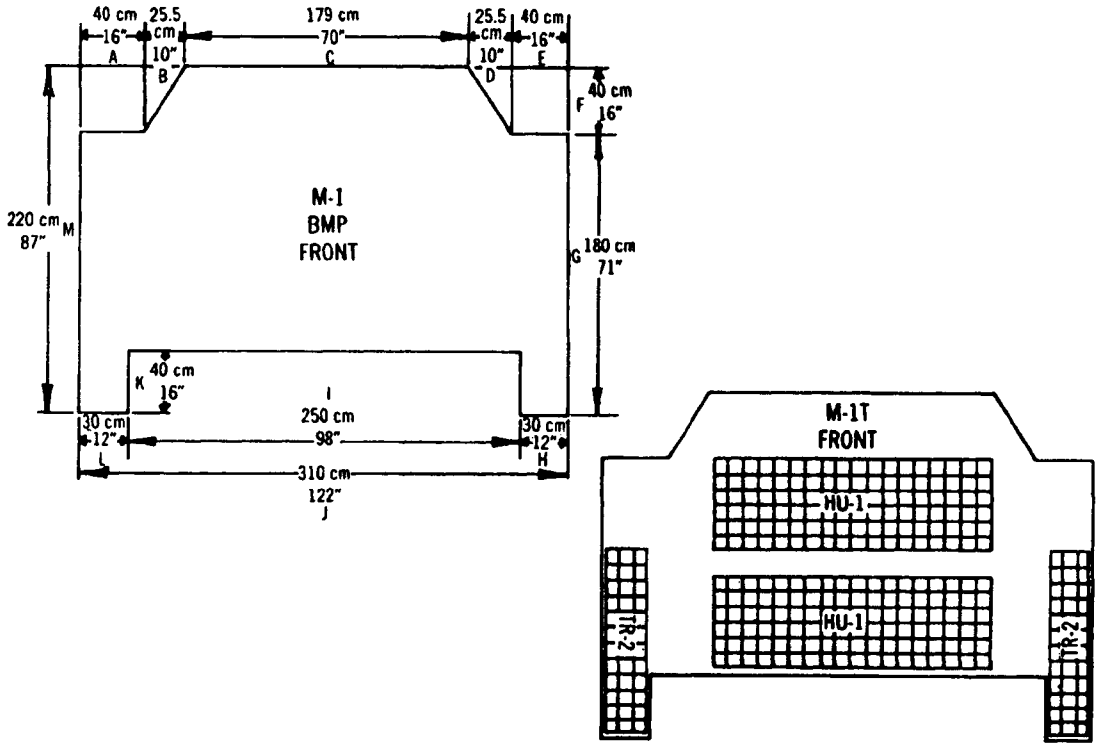

SCALE	In/cm	A	B	C	D	E	F	G	H	I	J	K	L	M
1:1	in	16	10	70	10	16	16	71	12	96	122	16	12	87
	cm	40	25.5	179	25.5	40	40	180	30	250	310	40	30	220
1:2	in	8	5	35	5	8	8	35.5	6	49	61	8	6	43.5
	cm	20	12.75	89.5	12.75	20	20	90	15	125	155	20	15	110
1:5	in	3.2	2	14	2	3.2	3.2	14.2	2.4	19.6	24.4	3.2	2.4	17.4
	cm	8	5.1	35.8	5.1	8	8	36	6	50	62	8	6	44
1:10	in	1.6	1	7	1	1.6	1.6	7.1	1.2	9.8	12.2	1.6	1.2	8.7
	cm	4	2.6	17.9	2.6	4	4	18	3	25	31	4	3	22

Figure 10-7. M-1 and conversion chart.

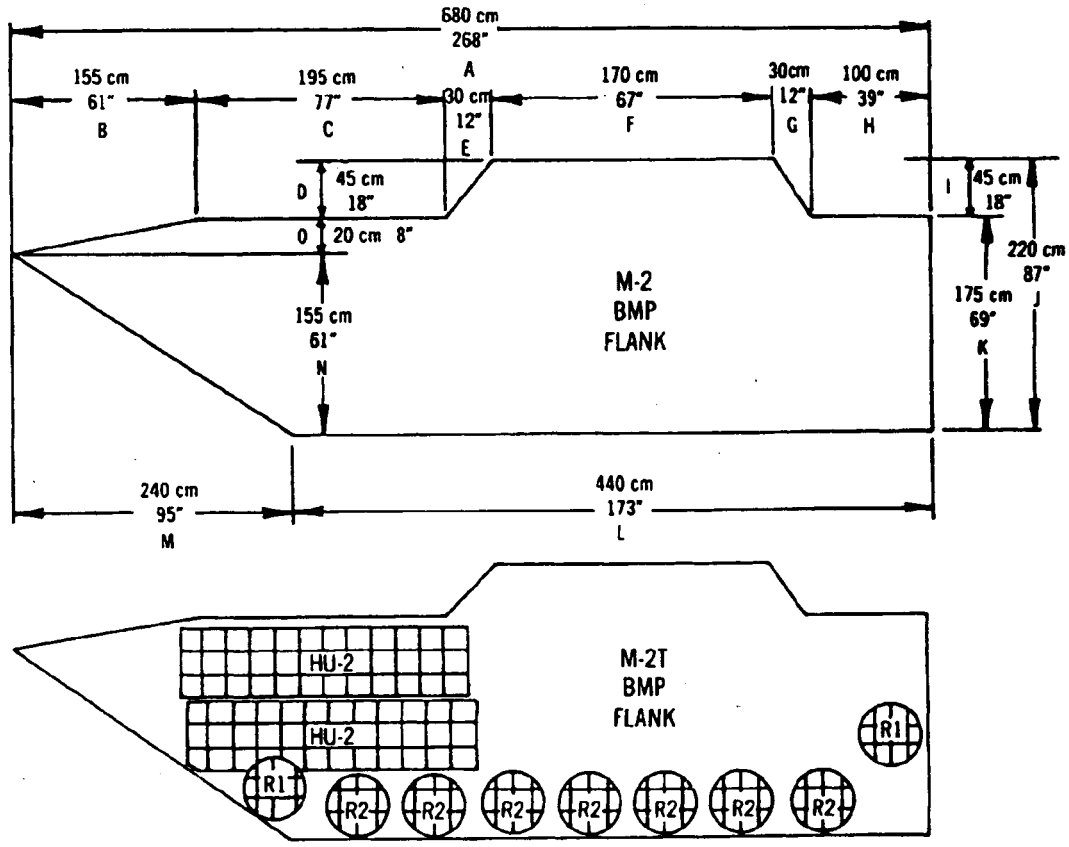

SCALE	In/cm	A	B	C	D	E	F	G	H	I	J	K	L	M	N	O
1:1	in	268	61	77	18	12	67	12	39	18	87	69	173	95	61	8
	cm	680	155	195	45	30	170	30	100	45	220	175	440	240	155	20
1:2	in	134	30.5	38.5	9	6	33.5	6	19.5	9	43.5	34.5	86.5	47.5	30.5	4
	cm	340	77.5	97.5	22.5	15	85	15	50	22.5	110	87.5	220	120	77.5	10
1:5	in	53.6	12.2	15.4	3.6	2.4	13.4	2.4	7.8	3.6	17.4	13.8	34.6	19	12.2	1.6
	cm	136	31	39	9	6	34	6	20	9	44	35	88	48	31	4
1:10	in	26.8	6.1	7.7	1.8	1.2	6.7	1.2	3.9	1.8	8.7	6.9	17.3	9.5	6.1	0.8
	cm	68	15.5	19.5	4.5	3	17	3	10	4.5	22	17.5	44	24	15.5	2

Figure 10-8. M-2 and conversion chart.

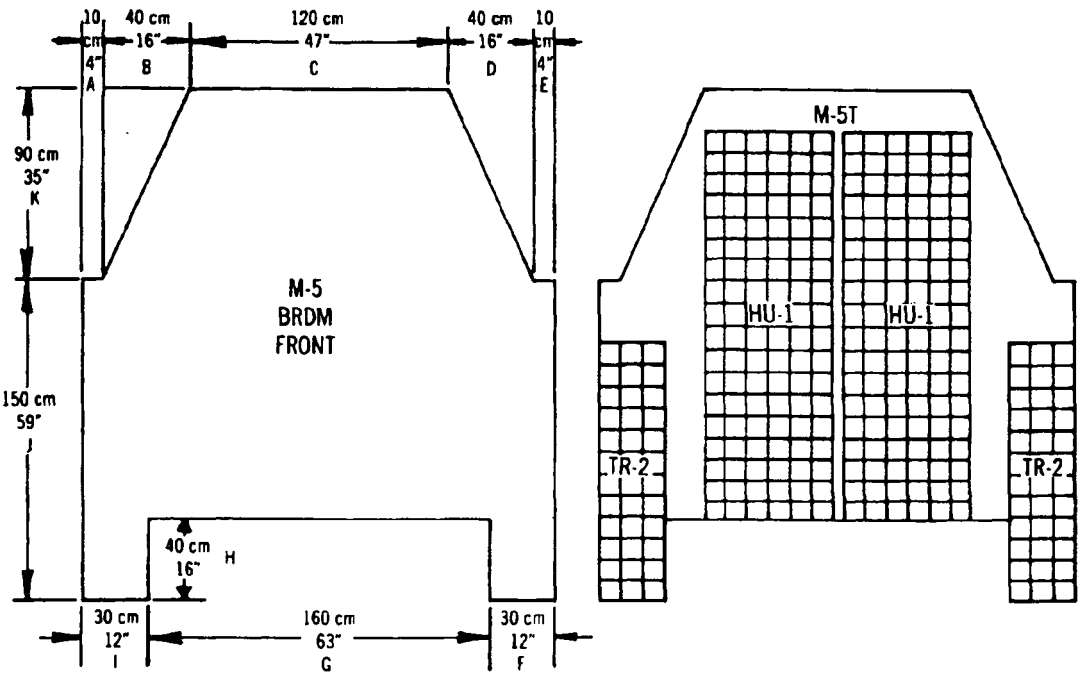

SCALE	In/cm	A	B	C	D	E	F	G	H	I	J	K
1:1	in	4	16	47	16	4	12	63	16	12	59	35
	cm	10	40	120	40	10	30	160	40	30	150	90
1:2	in	2	8	23.5	8	2	6	31.5	8	6	29.5	17.5
	cm	5	20	60	20	5	15	80	20	15	75	45
1:5	in	0.8	3.2	9.4	3.2	0.8	2.4	12.6	3.2	2.4	11.8	7
	cm	2	8	24	8	2	6	32	8	6	30	18
1:10	in	0.4	1.6	4.7	1.6	0.4	1.2	6.3	1.6	1.2	5.9	3.5
	cm	1	4	12	4	1	3	16	4	3	15	9

Figure 10-9. M-5 and conversion chart.

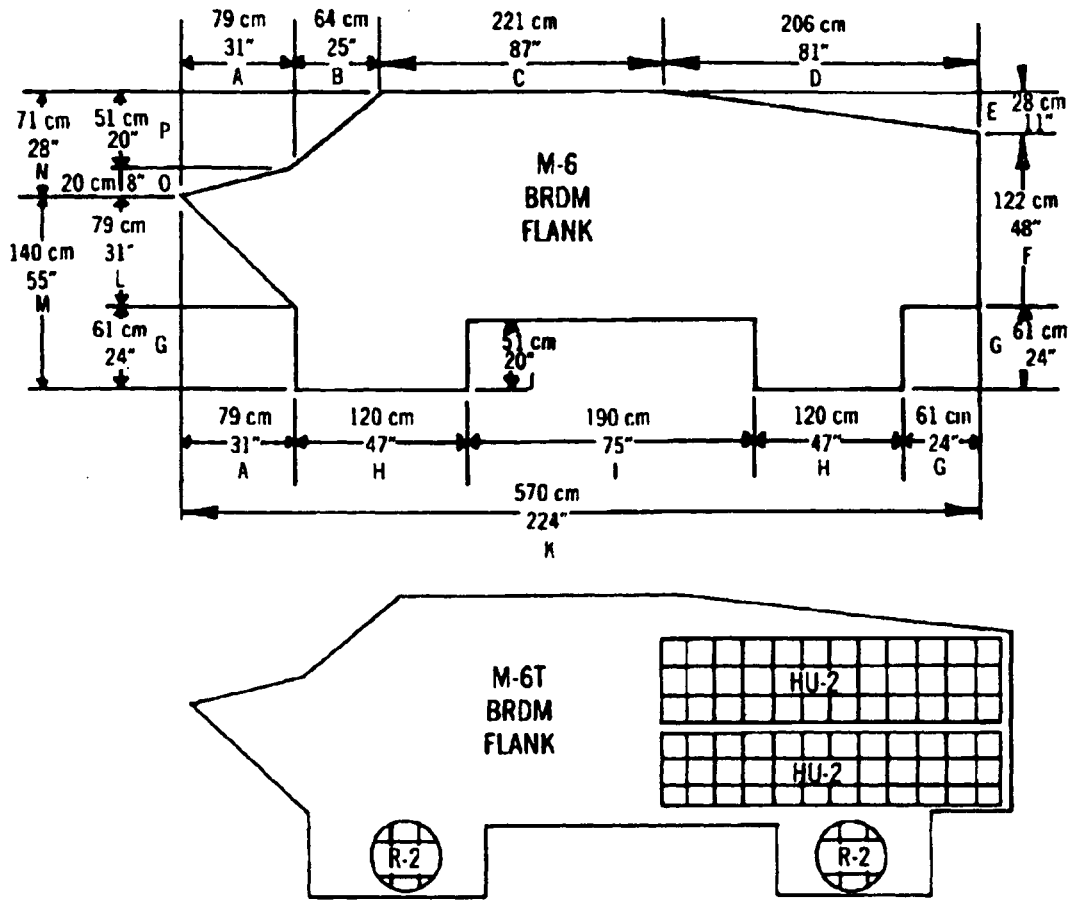

SCALE	In/cm	A	B	C	D	E	F	G	H	I	J	K	L	M	N	O	P
1:1	in	31	25	87	81	11	48	24	47	75	20	224	31	55	28	8	20
	cm	79	64	221	206	28	122	61	120	190	51	570	79	140	71	20	51
1:2	in	15.5	12.5	43.5	40.5	5.5	24	12	23.5	37.5	10	112	15.5	27.5	14	4	10
	cm	39.5	32	110.5	103	14	61	30.5	110	95	25.5	285	39.5	70	35.5	10	25.5
1:5	in	6.2	5	17.4	16.2	2.2	9.6	4.8	9.4	15	4	44.8	6.2	11	5.6	1.6	4
	cm	15.8	12.8	44.2	41.2	5.6	24.4	12.2	24	38	10.2	114	15.8	28	14.2	4	10.2
1:10	in	3.1	2.5	8.7	8.1	1.1	4.8	2.4	4.7	7.5	2	22.4	3.1	5.5	2.8	0.8	2
	cm	7.9	6.4	22	20.6	2.8	12.2	6.1	12	19	5.1	57	7.9	14	7.1	2	5.1

Figure 10-10. M-6 and conversion chart.

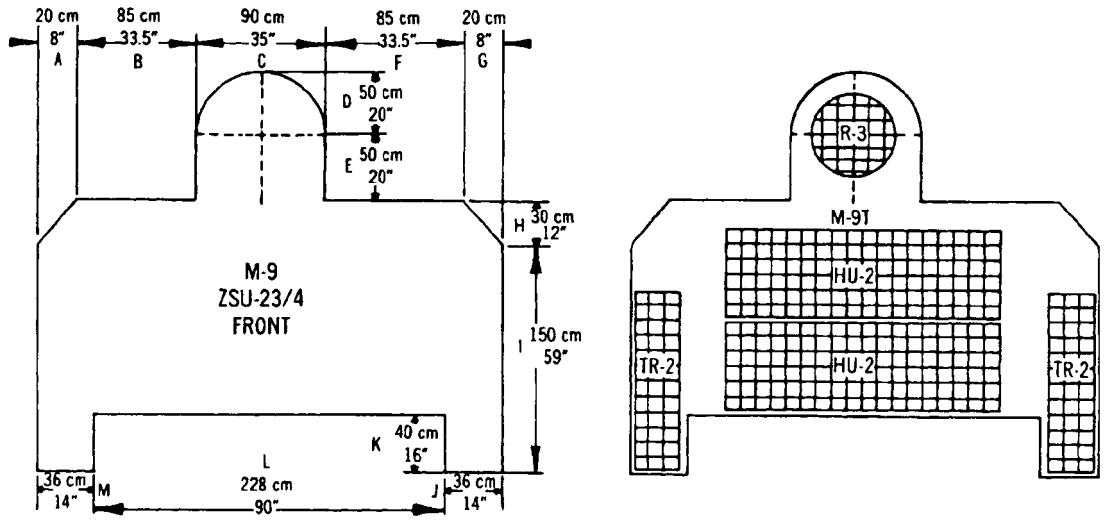

SCALE	In/cm	A	B	C	D	E	F	G	H	I	J	K	L	M
1:1	in	8	33.5	35	20	20	33.5	8	12	59	14	16	90	14
	cm	20	85	90	50	50	85	20	30	150	36	40	228	36
1:2	in	4	16.75	17.5	10	10	16.75	4	6	29.5	7	8	45	7
	cm	10	42.5	45	25	25	42.5	10	15	75	18	20	114	18
1:5	in	1.6	6.7	7	4	4	6.7	1.6	2.4	11.8	2.8	3.2	18	2.8
	cm	4	17	18	10	10	17	4	6	30	7.2	8	45.6	7.2
1:10	in	0.8	3.4	3.5	2	2	3.4	0.8	1.2	5.9	1.4	1.6	9	1.4
	cm	2	8.5	9	5	5	8.5	2	3	15	3.6	4	22.8	3.6

Figure 10-11. M-9 and conversion chart.

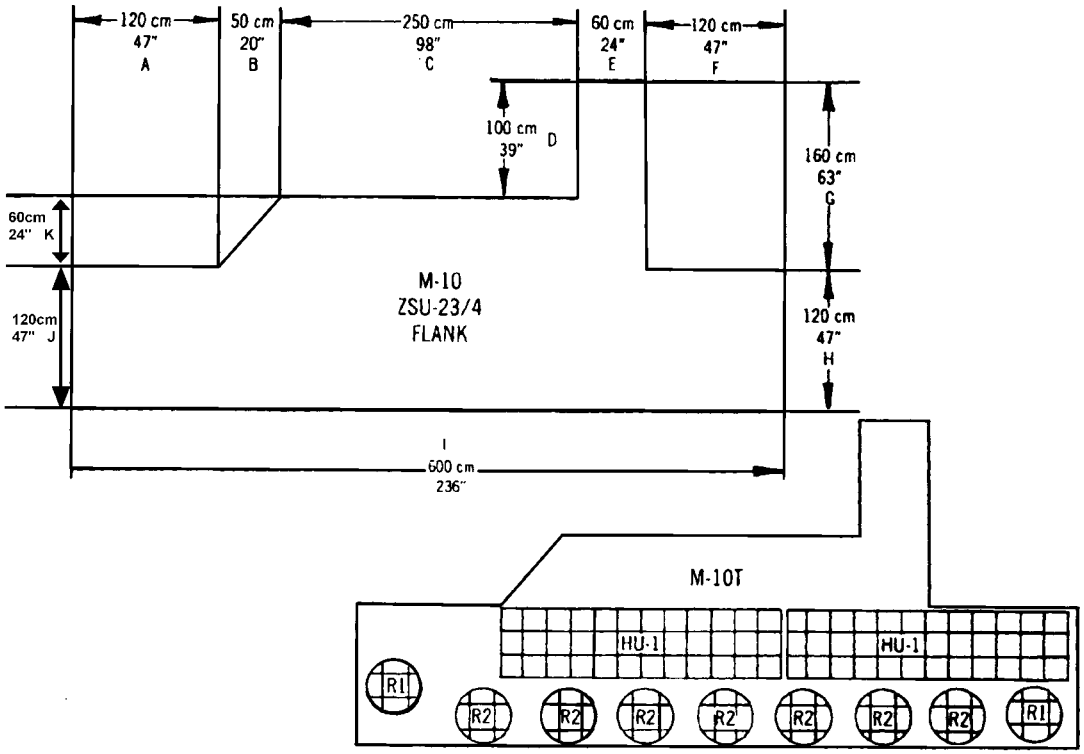

SCALE	In/cm	A	B	C	D	E	F	G	H	I	J	K
1:1	in	47	20	98	39	24	47	63	47	236	47	24
	cm	120	50	250	100	60	120	160	120	600	120	60
1:2	in	23.5	10	49	19.5	12	23.5	32.5	23.5	118	23.5	12
	cm	110	25	125	50	30	110	80	110	300	110	30
1:5	in	9.4	4	19.6	7.8	4.8	9.4	12.6	9.4	47.2	9.4	4.8
	cm	24	10	50	20	12	24	32	24	120	24	12
1:10	in	4.7	2	9.8	3.9	2.4	4.7	6.3	4.7	23.6	4.7	2.4
	cm	12	5	25	10	6	12	16	12	60	12	6

Figure 10-12. M-10 and conversion chart.

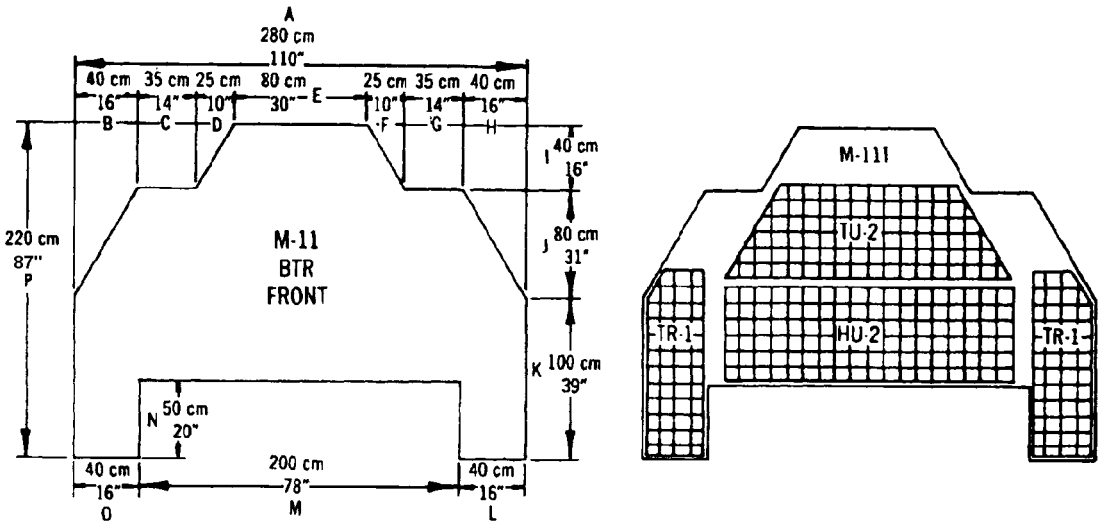

SCALE	In/cm	A	B	C	D	E	F	G	H	I	J	K	L	M	N	O	P
1:1	in	110	16	14	10	30	10	14	16	16	31	39	16	78	20	16	87
	cm	280	40	35	25	80	25	35	40	40	80	100	40	200	50	40	220
1:2	in	55	8	7	5	15	5	7	8	8	15.5	29.5	8	39	10	8	43
	cm	140	20	17.5	12.5	30	12.5	17.5	20	20	40	50	20	100	25	20	110
1:5	in	22	3.2	2.8	2	6	2	2.8	3.2	3.2	6.2	7.8	3.2	15.6	4	3.2	17.2
	cm	56	8	7	5	16	5	7	8	8	16	20	8	40	10	8	44
1:10	in	11	1.6	1.4	1	3	1	1.4	1.6	1.6	3.1	3.9	1.6	7.8	2	1.6	8.6
	cm	28	4	3.5	2.5	8	2.5	3.5	4	4	8	10	4	20	5	4	22

Figure 10-13. M-11 and conversion chart.

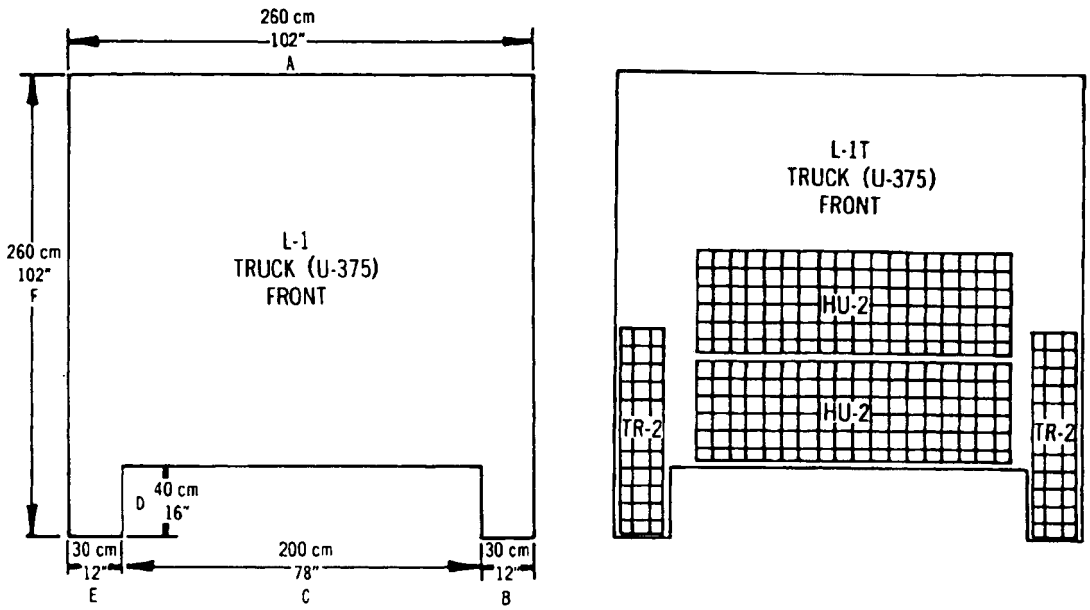

SCALE	In/cm	A	B	C	D	E	F
1:1	in	102	12	78	16	12	102
	cm	260	30	200	40	30	260
1:2	in	51	6	39	8	6	51
	cm	130	15	100	20	15	130
1:5	in	20.4	2.4	15.6	3.2	2.4	20.4
	cm	52	6	40	8	6	52
1:10	in	10.2	1.2	7.8	1.6	1.2	10.2
	cm	26	3	20	4	3	26

Figure 10-14. L-1 and conversion chart.

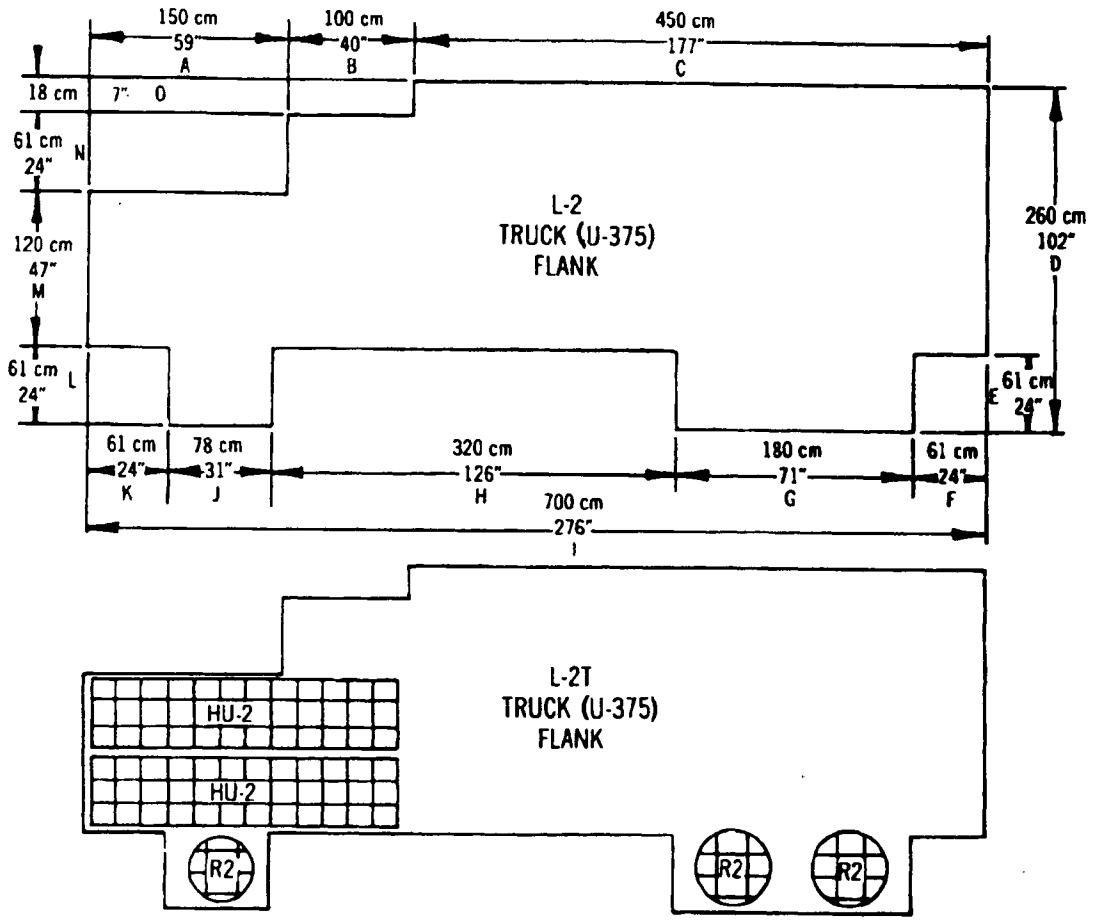

SCALE	In/cm	A	B	C	D	E	F	G	H	I	J	K	L	M	N	O
1:1	in	59	40	177	102	24	24	71	126	276	31	24	24	47	24	7
	cm	150	100	450	260	61	61	180	320	700	78	61	61	120	61	18
1:2	in	29.5	20	88.5	51	12	12	35.5	63	138	15.5	12	12	23.5	12	3.5
	cm	75	50	225	130	30.5	30.5	90	160	350	39	30.5	30.5	60	30.5	9
1:5	in	11.8	8	35.4	20.4	4.8	4.8	14.2	25.2	55.2	6.2	4.8	4.8	9.4	4.8	1.4
	cm	30	20	90	52	12.2	12.2	36	64	140	15.6	12.2	12.2	24	12.2	3.6
1:10	in	5.9	4	17.7	10.2	2.4	2.4	7.1	12.6	27.6	3.1	2.4	2.4	4.7	2.4	0.7
	cm	15	10	45	26	6.1	6.1	18	32	70	7.8	6.1	6.1	12	6.1	1.8

Figure 10-15. L-2 and conversion chart.

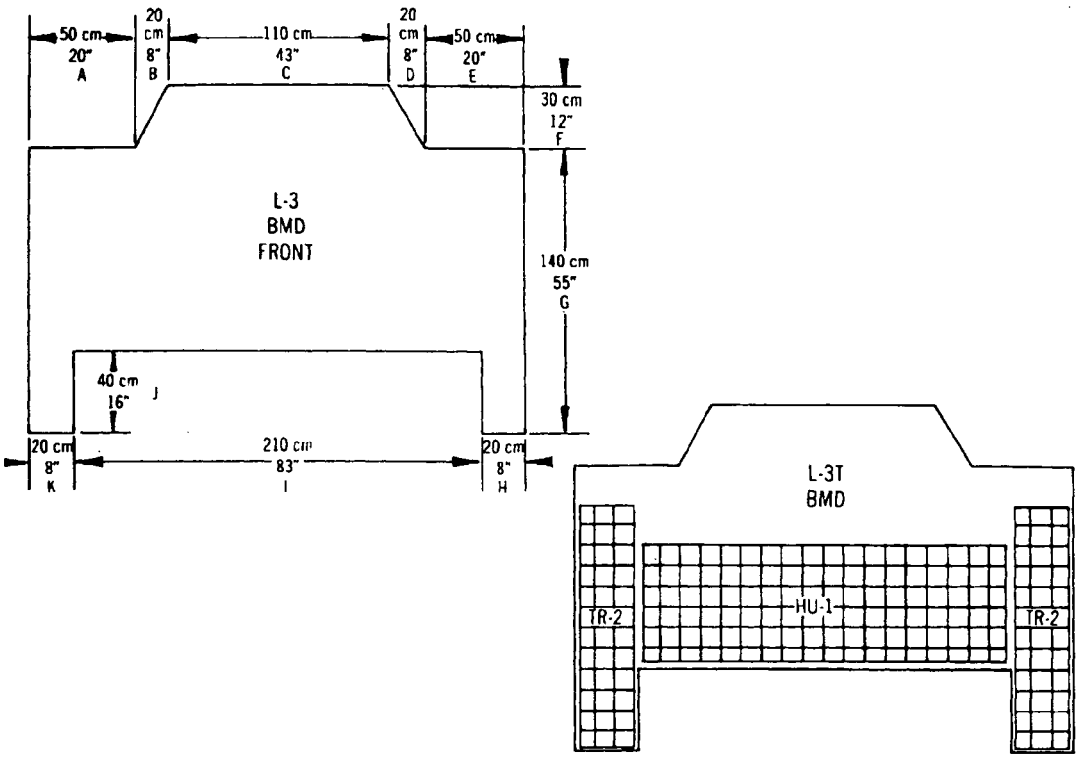

SCALE	In/cm	A	B	C	D	E	F	G	H	I	J	K
1:1	in	20	8	43	8	20	12	55	8	83	16	8
	cm	50	20	110	20	50	30	140	20	210	40	20
1:2	in	10	4	21.5	4	10	6	27.5	4	41.5	8	4
	cm	50	10	55	10	25	15	70	10	105	20	10
1:5	in	4	1.6	8.6	1.6	4	2.4	11	1.6	16.5	3.2	1.6
	cm	10	4	22	4	10	6	28	4	42	8	4
1:10	in	2	0.8	4.3	0.8	2	1.2	5.5	0.8	8.3	1.6	0.8
	cm	5	2	11	2	5	3	14	2	21	4	2

Figure 10-16. L-3 and conversion chart.

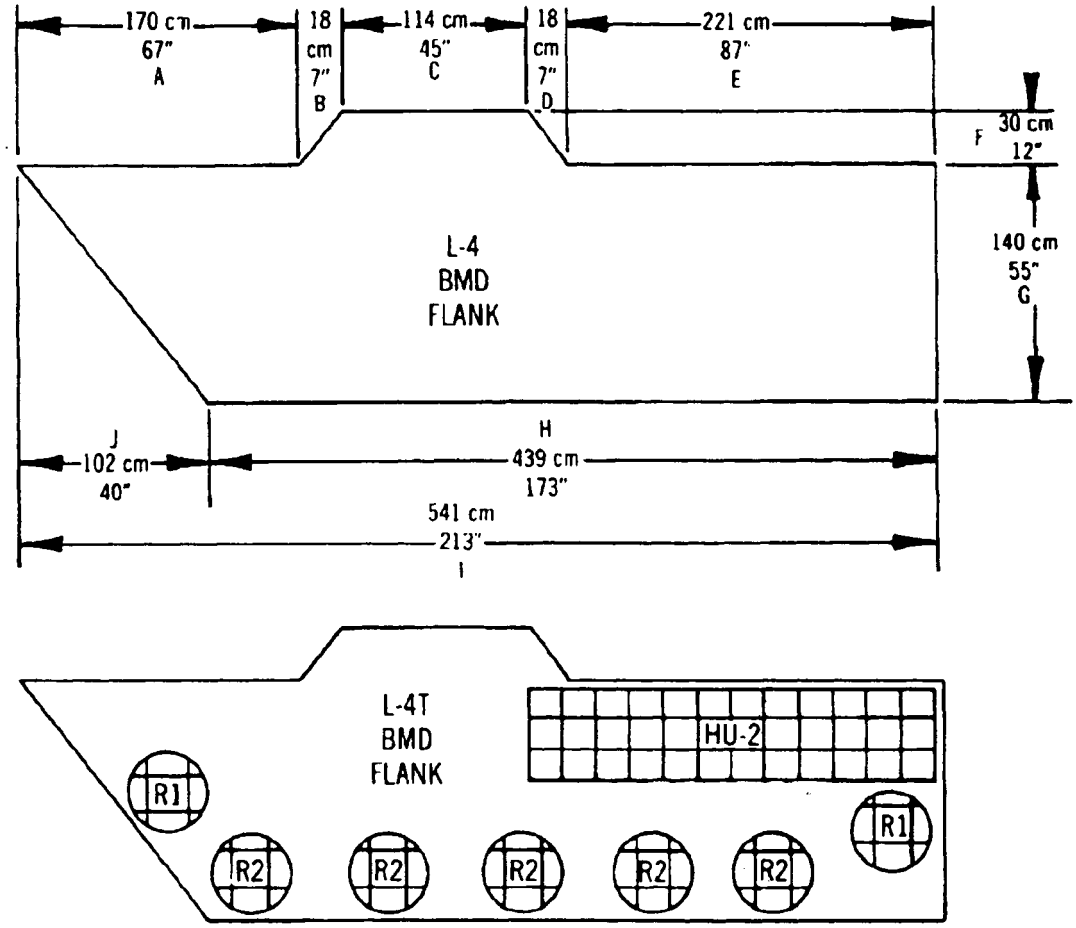

SCALE	In/cm	A	B	C	D	E	F	G	H	I	J
1:1	in	67	7	45	7	87	12	55	173	213	40
	cm	170	18	114	18	221	30	140	439	541	102
1:2	in	33.5	3.5	22.5	3.5	43.5	6	27.5	86.5	106.5	20
	cm	85	9	57	9	110.5	15	70	219.5	270.5	51
1:5	in	13.4	1.4	9	1.4	17.4	2.4	11	34.6	42.6	8
	cm	34	3.6	22.8	3.6	44.2	6	28	87.8	108	20.4
1:10	in	6.7	0.7	4.5	0.7	8.7	1.2	5.5	17.3	21.3	4
	cm	17	1.8	11.4	1.8	22.1	3	14	43.9	54.1	10.2

Figure 10-17. L-4 and conversion chart.

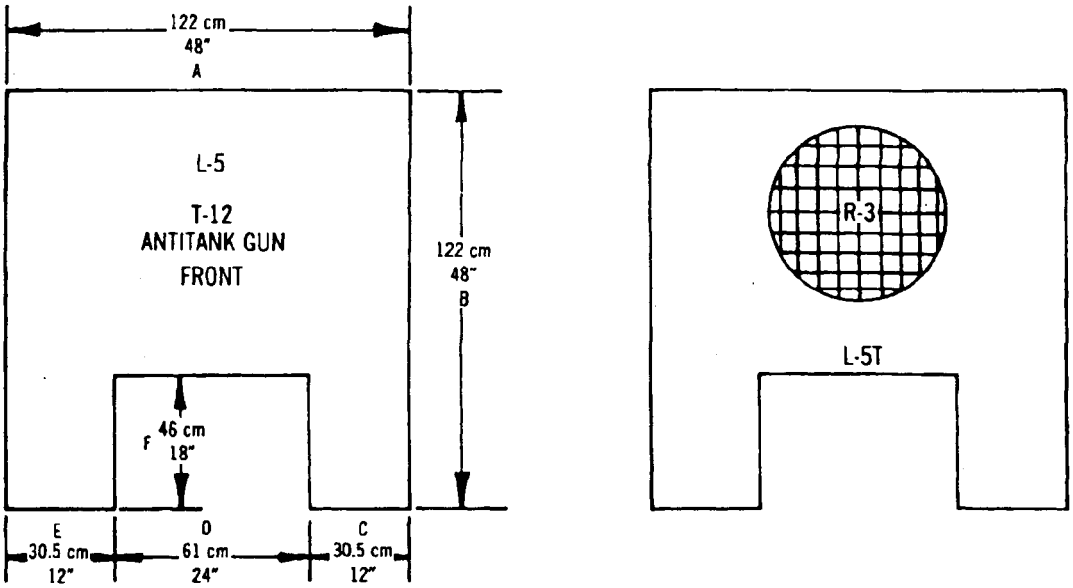

SCALE	In/cm	A	B	C	D	E	F
1:1	in	48	48	12	24	12	18
	cm	122	122	30.5	61	30.5	46
1:2	in	24	24	6	12	6	9
	cm	61	61	15.25	30.5	15.25	23
1:5	in	9.6	9.6	2.4	4.8	2.4	3.6
	cm	24.4	24.4	6.1	12.2	6.1	9.2
1:10	in	4.8	4.8	1.2	2.4	1.2	1.8
	cm	12.2	12.2	3	6.1	3	4.6

Figure 10-18. L-5 and conversion chart.

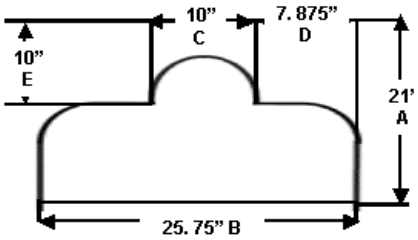

L-6 Troop Silhouette

SCALE	In/cm	A	B	C	D	E
1:1	in	21	25.75	10	7.875	10
	cm	53.3	65.4	25.4	20	25.4
1:2	in	10.5	12.875	5	3.9375	5
	cm	26.7	32.7	12.7	10	12.7
1:10	in	2.1	2.575	1	.7875	1
	cm	5.3	6.5	2.5	2	2.5

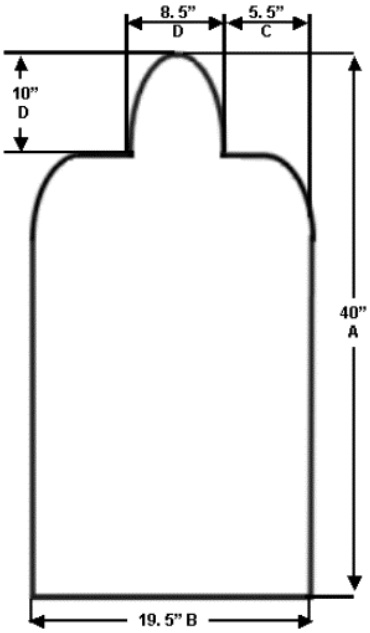

L-7 Troop Silhouette

SCALE	In/cm	A	B	C	D	E
1:1	in	40	19.5	8.5	5.5	10
	cm	101.6	49.5	21.6	14	25.4
1:2	in	20	9.75	4.25	2.75	5
	cm	50.8	24.7	10.7	6.9	12.7
1:10	in	4	1.95	.85	.55	1
	cm	10.2	5	2.2	1.4	2.5

Figure 10-19. L6 and L7 and conversion charts.

Target Mechanisms

TARGET-HOLDING MECHANISM—TANK GUNNERY

The target-holding mechanism—tank gunnery (THMTG) raises and lowers a full-scale silhouette and indicates when a hit is made. It is portable and designed for use in local or major training areas.

The THMTG consists of a target-lifting device and a remote radio transmitter (RT). The RT sends FM signals to a receiver in the target-lifting device. The signals are translated into logic levels by an electronics unit. These logic levels are used to raise and lower the target silhouette or to operate the optional Hostile Fire Simulator, as selected (see Figure 10-20).

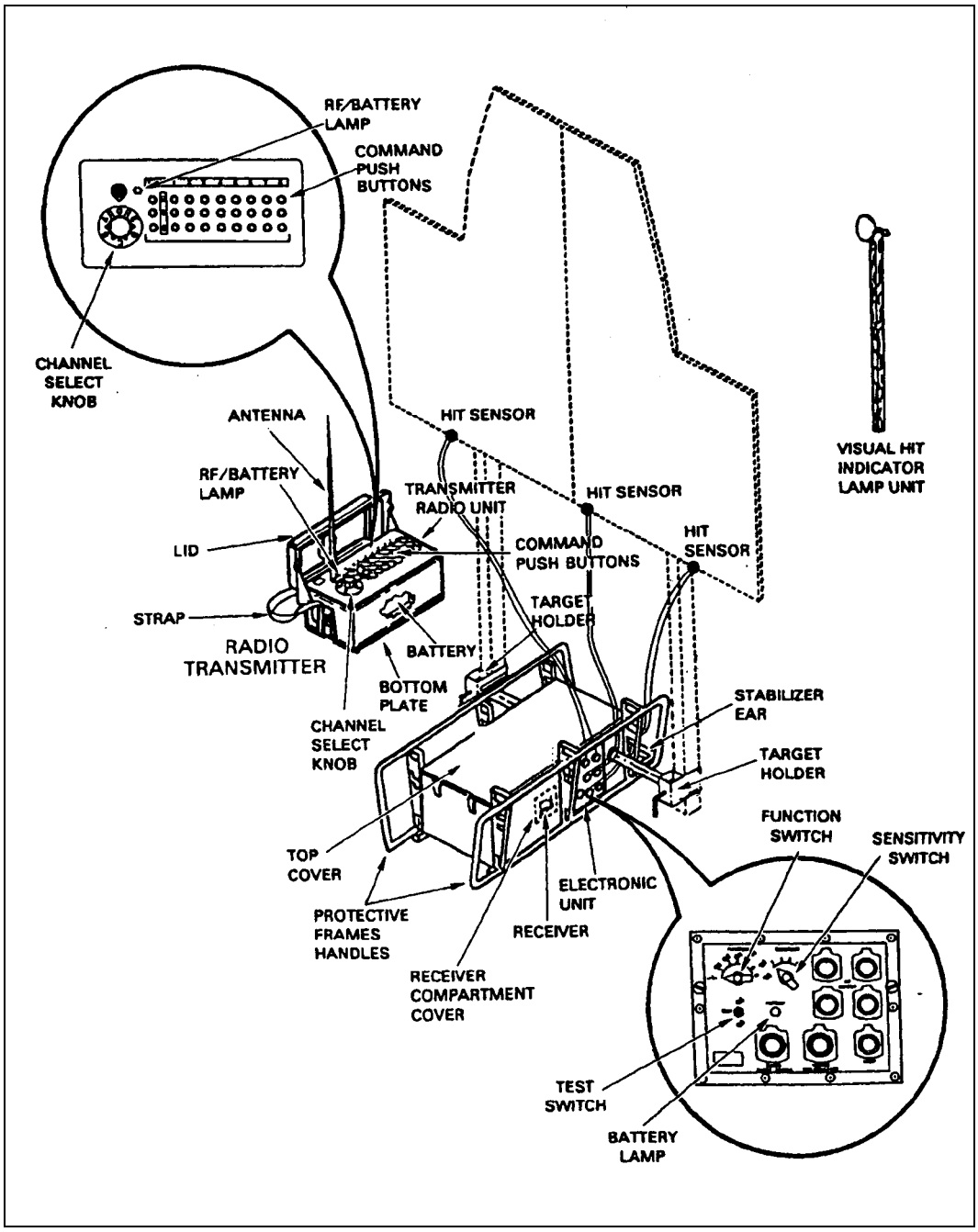

Figure 10-20. Target-holding mechanism.

Hit sensors attached to the target silhouette detect target hits of the following ammunition:

NEW	OLD
Caliber .50 or larger, setting 1	Caliber .50 or larger, setting 1
20mm or larger, setting 2	20mm or larger, setting 2
105mm or larger, setting 3	105mm or larger, setting 3
120mm or larger, setting 4	ATGM, setting 4
ATGM, setting 5	

A target hit activates the visual hit indicator lamp or optional visual hit smoke scorer and causes the target to fall. The visual hit indicator lamp flashes for 0.5 to 1.5 seconds when actuated. Hit sensor sensitivity can be adjusted to determine the size round the target will accept for a kill and minimize the response to near misses, close shot debris, muzzle blast, or wind effects.

The electronics unit controls the scoring options available for the target-lifting device. The electronics unit reacts to stimulation from the hit sensors.

REMOTED-TARGET SYSTEM

The remoted-target system (RETS) trains tank crews, mechanized infantry, scout crews, and platoons in tank combat table exercises and antitank and helicopter gunnery.

The RETS is a series of standardized target mechanisms installed on the (digital) multipurpose range complex ([D]MPRC) and (digital) multipurpose training range. The (D)MPRC provides moving target systems, stationary target bunkers, and hard-wire systems for power and control.

Components of the RETS (see Figure 10-20) and their functions are—

- The stationary target elevating mechanism (STEM) raises and lowers vehicular targets.
- The target interface unit (TIU) receives encoded target control data from the range control system and decodes it into control signals.
- The visual flash simulator (VFS) produces the steel-on-steel flash of a target hit.
- The armor moving target carrier (AMTC) simulates a tank moving from one concealed position to another.
- The M31A1 target mechanism is a motor-driven device used in automatic or semiautomatic rifle fire training.
- The target kill simulator (TKS) gives the effect of a vehicle burning after a target kill.
- The power distribution and control unit (PDCU) provides the power and control signals for the TKS, VFS, and AMTC.
- The interconnecting box (high/low power) serves as an interface for the RETS range and each target.
- The sensing and scoring subsystem detects a variety caliber of rounds and relays target hit data to the control system.
- The control console can be programmed to cause all target mechanisms and accessories to react or operate on a predetermined basis. The control console also provides a hard copy (printout) of exercise sequencing and results.

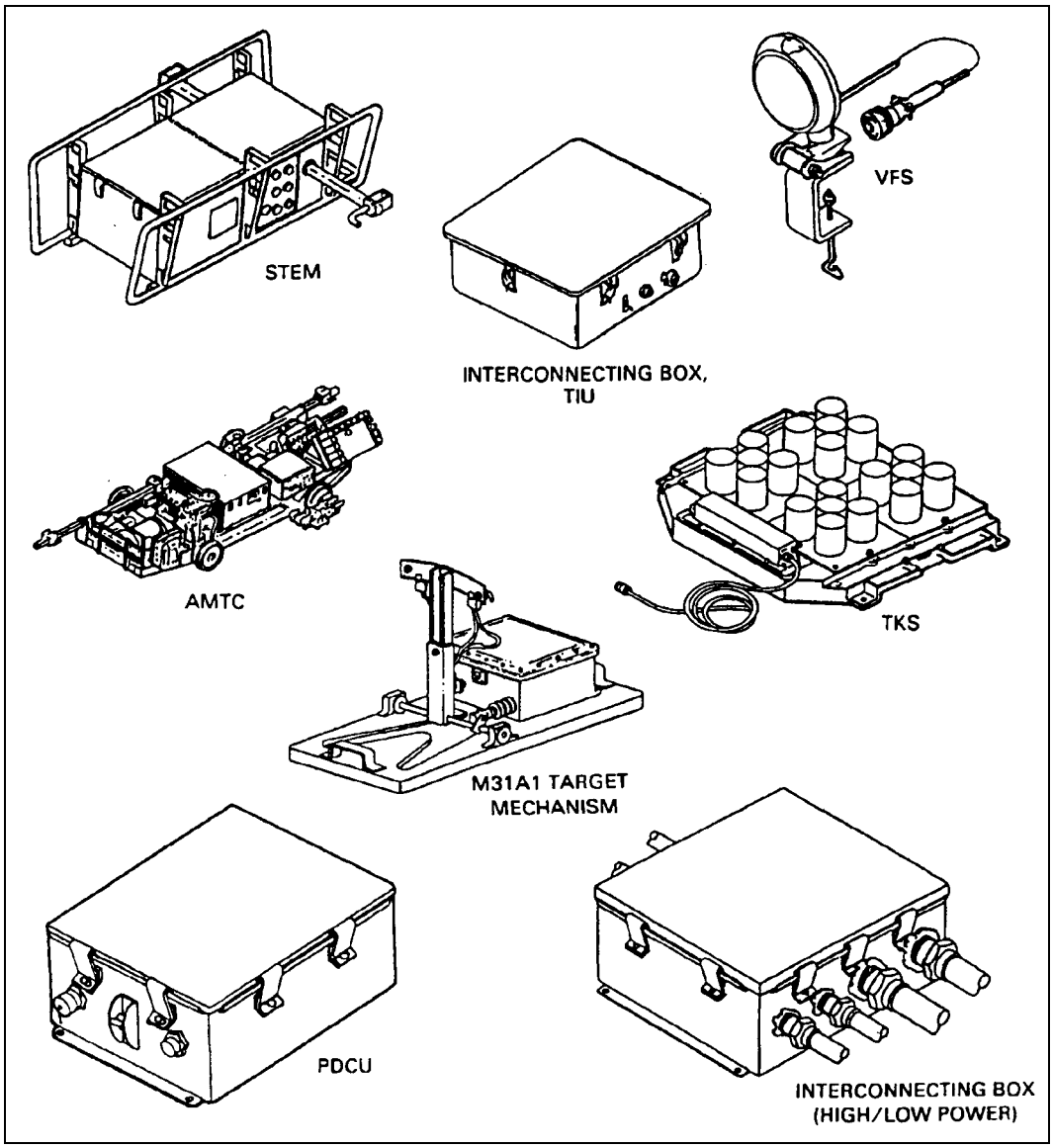

Figure 10-21. Remoted-target system.